HENDRICKSON

The World Rides On Us

Trailer Commercial Vehicle Systems

PARTS CATALOG

Protect your investment with Hendrickson Genuine Parts

Hendrickson views education and knowledge as paramount attributes in an industry where equipment uptime is the primary metric. To facilitate these attributes, Hendrickson offers a vast array of tools to support parts and service personnel, along with do-it-yourselfers. Always use Hendrickson Genuine Parts for the best quality in the industry.

Hendrickson's website is the single point of entry to our information and educational highway. Part sell sheets, tech tips, parts lists and technical publications are only a key stroke away. With the endless and dynamic change in our industry, more complex tools are required.

Hendrickson's website offers access to lift axle and bumper configurators, Parts Look Up System (PLUS+) and online educational videos from the Hendrickson Academy. With the combination of Hendrickson genuine parts and support tools, fleets and owner-operators can perform with confidence knowing Hendrickson systems and components support their efforts to help achieve maximum uptime.

Original parts.

Original fit.

Original performance.

www.hendrickson-intl.com

Trailer Ride Solutions & Parts Catalog Guide

Genuine Parts Product Profiles 6

Recommended Stocking List 19

Trailer Suspension Axle Identification Guide 27

Primary Fixed Suspensions 57

Slider Suspension System 175

Non-Integrated Trailer Axles 252

Tire Inflations Systems 253

Brake and Wheel-End Components 254

Vehicle Controls 255

Value Added Options 256

Suspension and Slider Components 266

Suspension Ordering Guides 267

Service Tools 268

Repeated Documents 274

ON-HIGHWAY

ULTRAA-K®

VANTRAAX®

HK™ SLIDERS

INTRAAX® SP

TRLAXLE®

TIREMAAX®

HEIGHT CONTROL VALVES

SURELOK®

UBL™

RTR®

VOCATIONAL

CONNEX®

CONNEX® ST

HT® SERIES

INTRAAX®

RTR®

TRLAXLE®

TIREMAAX®

QUIK-DRAW®

SURELOK®

UBL™

Guide to this Comprehensive Catalog

This catalog is designed to simplify the identification and selection of Hendrickson Trailer Commercial Vehicle Systems genuine parts. It includes the following Hendrickson publications – Popular Kits and Parts, Product Profiles, Suspension Conversions, Selection Guides, and Parts Lists – that are also available separately online at www.hendrickson-intl.com.
Follow the simple steps below to access digital downloads in PDF format or if available the printed literature.

1 Look at bottom of page for reference literature number

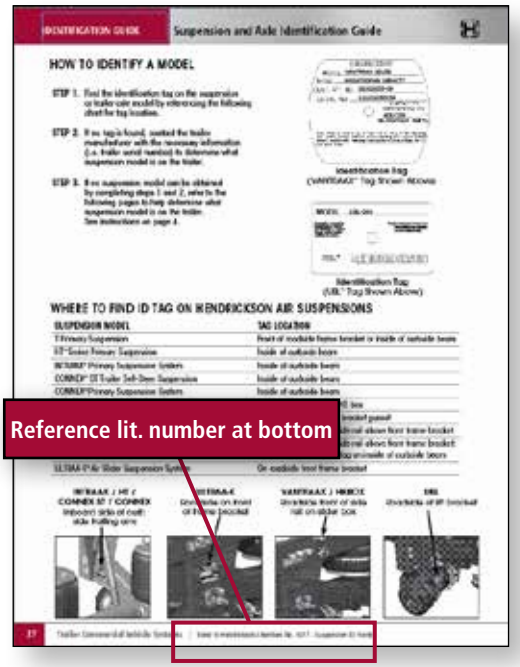

2 Click the Search key

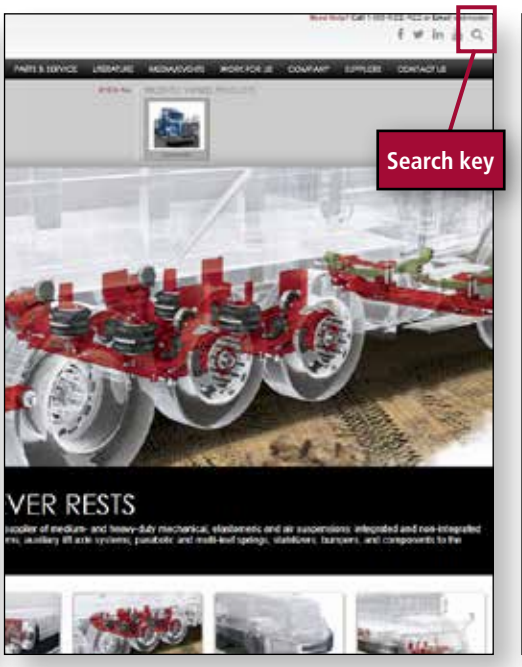

3 Enter the literature number

OR

1 Click on *Parts & Services*

2 Click on Trailer under *Part Profiles*

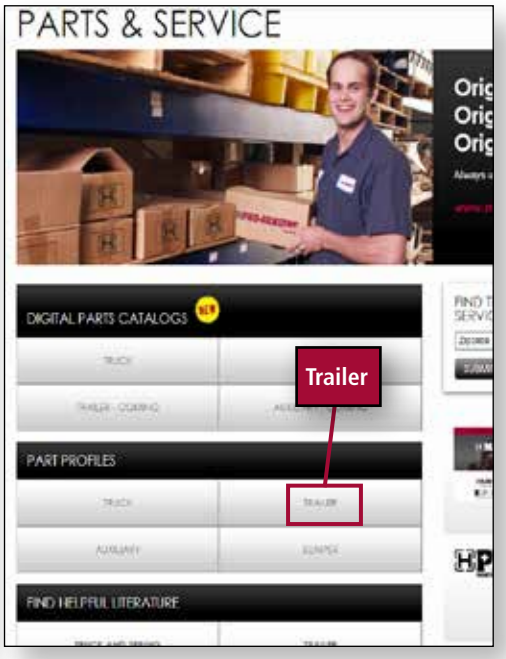

3 Select from the following options

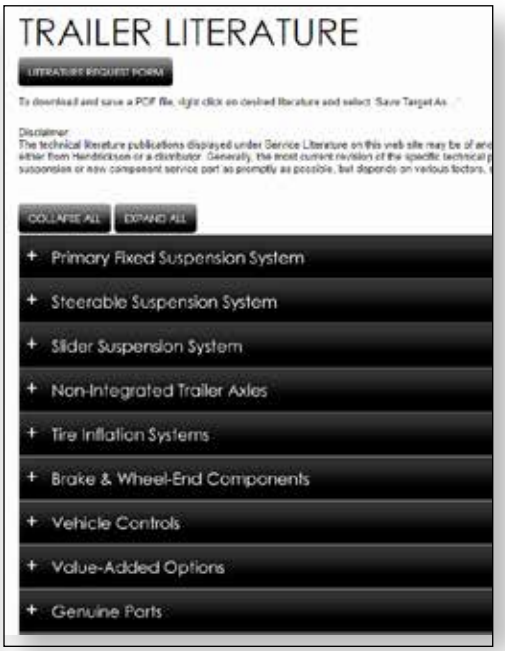

Genuine Parts Product Profiles

L565 - TRI-FUNCTIONAL® Bushings 6

L595 - Trailer Supension Systems 8

L1019 - Trailer Air Springs 10

L1020 - Trailer Shock Absorbers 11

L1209 - ZMD® 12

L1212 - ZMD FAQ 14

L1214 - CAM TUBE SYSTEM™ 17

- Optimized ride quality
- Optimized road stability
- Optimized durability

TF II

TF III

Driving Innovation

Hendrickson pioneered the use of a single, large-diameter bushing in trailer air suspensions with our TRI-FUNCTIONAL® bushing. Used in unison with rigid beams and solid axle connections, TRI-FUNCTIONAL bushings delivert enhanced road stability and ride quality in approved on- and off-highway applications. The result is a dependable suspension system that offers extended life, reduced maintenance and maximum protection for cargo, drivers and equipment.

Three Main Functions

The void design and material composition of these unique bushings are critical to controlling the horizontal, vertical and roll forces a trailer generates rolling down the road. A key element of the pivot connection, the TRI-FUNCTIONAL bushing is contained inside the beam with sufficient compression to permit it to flex but not rotate. Compression of one bushing combined with expansion of the opposing bushing helps keep wheels on the road during turns and over irregular surfaces.

Industry-Leading Warranty*

- Approved on-highway applications — up to seven years
- Approved vocational applications — up to seven years
- Approved raw wood applications — up to seven years
- Aftermarket — one year

**Contact Hendrickson for complete warranty terms, conditions and limitations.*

Feature and Benefits

TRI-FUNCTIONAL® III Bushing (TF III)
For INTRAAX® and VANTRAAX® narrow-beam systems

- Increased durability
- Expanded service life
- Enhanced cargo protection and ride
- Broader range of applications

TRI-FUNCTIONAL II BUSHING (TF II)
For INTRAAX, VANTRAAX and HT® SERIES wide-beam suspensions

- Heavy-duty successor to the original TRI-FUNCTIONAL Bushing (TF I)
- Improved fatigue over TF I
- Couple with bushing tube spacers to control lateral movements

Optimally Designed Voids

- Absorb varying road forces
- Improved road stability
- Smooth ride
- Cargo protection

Solid Rubber

- Provide fore-aft assistance
- Maintain proper axle alignment and suspension tracking

Specially Formulated Rubber Compound

- Stands up against tough operating conditions

TF III

TF II

Bushing's Three Functions (Tri-Functional)

Hendrickson's bushings control three primary road forces:

Vertical Forces

- Voids expand and compress to absorb road induced forces allowing optimum suspension articulation without over stressing the axle
- Ride quality and payload protection surpass other bushing designs

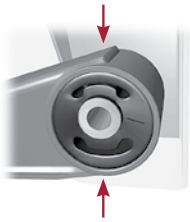

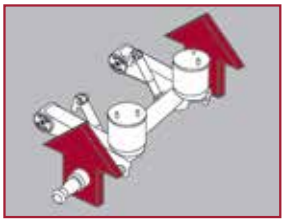

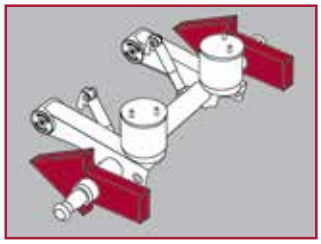

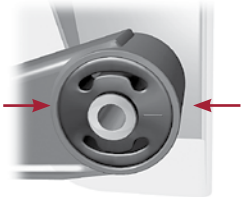

Horizontal Movement

- Solid rubber areas resist forward and backward movement to maintain suspension tracking and alignment during braking and acceleration

Roll Stability

- Voids allow increased articulation to provide exceptional control during turning and roll events
- The special void shapes enhance the axle's ability to act as a torsion bar, resisting trailer roll forces

Hendrickson Genuine Parts *are the same quality components installed in Hendrickson original equipment suspensions — consisting of the same design, construction, performance and durability. There's only one way to maintain and protect your suspension's original performance. Ask for the name that is synonymous with the finest manufactured suspensions in the world.*

Maintain peak suspension performance with Hendrickson Genuine Parts

Over the decades, Hendrickson Trailer Commercial Vehicle Systems has manufactured millions of air suspensions and integrated systems for trailers. Air springs, shocks, bushings, axles, brake systems and air controls are designed, tuned and tested to ensure they function harmoniously to provide superior suspension system performance. Using Hendrickson Genuine Parts helps ensure the continued reliability and performance you expect from Hendrickson.

Air Springs

Not all air springs are created equal. Differences in air spring piston design, flex member length and overall dimensions may not be obvious. Critical dimensions not visible to the naked eye, including variations in internal bumpers and flex member bias angles, can alter air spring performance. Additionally, mixing air spring designs may cause adverse loading conditions within the suspension system. Always choose Hendrickson Genuine air springs for correct fit, exceptional ride quality and long service life.

Shocks

Hendrickson shocks are designed with specific strokes, seal designs, bore diameters and damping characteristics to optimize the overall performance of the suspension system. Collapsed and extended lengths are critical to air spring, mounting clevis and trailer cross member integrity and life. For example, using a shock with a longer stroke than required may result in overextension of the air spring; too short of a stroke can damage mounting clevises or trailer cross members. To ensure optimal suspension performance, always ask for Hendrickson Genuine shocks.

Bushings

Hendrickson pioneered the use of a single, large-diameter bushing in trailer air suspensions with our TRI-FUNCTIONAL® bushing. Coupled with our rigid beam and solid axle connection, Hendrickson's TRI-FUNCTIONAL bushings deliver enhanced ride and road stability, for a dependable system that provides extended life, reduced maintenance and cargo protection. The void design and material composition of these unique bushings are critical to controlling the horizontal, vertical and roll forces a trailer generates rolling down the road. Insist on Hendrickson Genuine TRI-FUNCTIONAL bushings for exact fit and optimum performance.

Brake Components

Hendrickson's brake designs feature more efficient brake systems with shorter S-cams and beam-mounted hardware. Our patented▲ Cam Tube System™ extends brake component life, improves brake responsiveness and reduces maintenance costs by locking out contamination. Hendrickson offers a full line of replacement brake shoes, camshafts and cam tube kits to help ensure continued superior performance of your INTRAAX® or VANTRAAX® integrated system or TRLAXLE® non-integrated axle.

▲ This product is covered by at least one or more U.S. and/or foreign patents and/or pending U.S. and/or foreign patent applications. See Hendrickson for details.

Air Controls

Hendrickson supplies various air and electric-over-air liftable controls, as well as height control and pressure protection valves. Specially designed and tested for optimum performance with Hendrickson air suspensions, our HCVs help maintain outstanding load stability over the road. Hendrickson also offers many manual and automatic controls to exhaust air suspensions. Our engineering staff includes personnel with air control knowledge unique to the industry and just as our air suspension systems, we insist on designing advanced air control solutions.

Pivot Connections

Hendrickson suspension pivot connections provide long-life service and axle alignment precision.

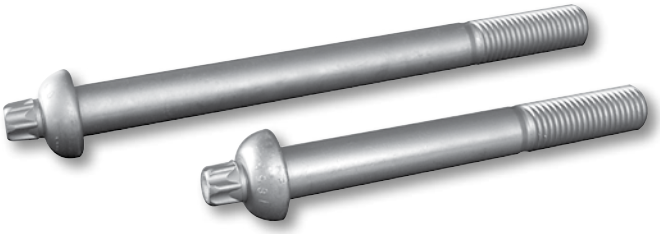

QUIK-ALIGN®

Uses a specially designed shear-type bolt combined with eccentric and concentric alignment collars. QUIK-ALIGN pivot connection does not require welding or special tools to re-align the suspension system.

Welded Alignment

Uses a 1-1/8-inch diameter threaded pivot bolt with steel collars. The axle is aligned and then the collars are welded in place.

Fabrication

Hendrickson's history of success centers around our manufacturing and fabrication capabilities. Integral components that comprise our INTRAAX, VANTRAAX and HT® Series suspension product lines such as beam assemblies and frame brackets are produced using robotic welding techniques pioneered by Hendrickson.

Hendrickson Genuine Parts *are the same quality components installed in Hendrickson original equipment suspensions — consisting of the same design, construction, performance and durability. There's only one way to maintain and protect your suspension's original performance. Ask for the name that is synonymous with the finest manufactured suspensions in the world.*

-Optimized ride quality
-Optimized road stability
-Optimized durability

Looks Can Be Deceiving
All air springs are not created equal. Visual similarities among air springs do not guarantee the same fit and functionality as Hendrickson Genuine air springs. Critical dimensions not visible to the naked eye including air spring piston design, flex member length and internal bumpers are essential to the overall performance of your Hendrickson suspension system.

Don't Settle For Less
Mixing air spring designs can cause premature wear on other suspension components vital to maintaining your suspension's ride quality, driver comfort and cargo protection. Non-genuine air springs may differ structurally and not meet the specific mounting requirements of your suspension which can lead to air spring failures due to air spring chafing, incorrect air spring pressure and trailer lean – all problems that can lead to increased downtime and costly repairs.

Protect Your Investment
Hendrickson Genuine Parts work in unison to provide superior performance and enhanced system life. Why diminish the value of your trailer with non-genuine components? Hendrickson Genuine Parts give you peace of mind knowing your replacement part fits and functions to maintain peak performance of your Hendrickson suspension system.

TRAILER AIR SPRINGS Unique Design Features

- Exclusive air spring piston design
- Special flex member lengths
- Unique internal bumpers

Hendrickson Genuine Air Springs are specially designed to:

- Offer superior fit and functionality
- Enhance ride quality
- Reduce overall maintenance of your Hendrickson suspension system
- Optimize system performance

Hendrickson Genuine Parts *are the same quality components installed in Hendrickson original equipment suspensions — consisting of the same design, construction, performance and durability. There's only one way to maintain and protect your suspension's original performance. Ask for the name that is synonymous with the finest manufactured suspensions in the world.*

-Optimized ride quality
-Optimized road stability
-Optimized durability

Nothing is quite like the original
Visually, a part may look compatible; however, the inner working parts of Hendrickson shocks distinguish us from non-genuine shocks. Our shocks feature a solid inner metal bushing to withstand our high torque level requirements. Using our tough torque requirements on the mounting bolt of a non-genuine product could result in collasped shocks.

Don't be fooled by imposters
Shocks require the same stroke to keep your trailer functioning properly. Using a non-genuine shock with too short of a stroke can damage mounting clevises or the trailer's cross members. Too long of a stroke can overextend suspension air springs. Using Hendrickson Genuine shocks can prolong the life of other integral suspension components and help reduce costly repairs.

Protect your investment
Hendrickson Genuine Parts work in unison to provide superior performance and enhanced system life. Why diminish the value of your trailer with non-genuine components? Hendrickson Genuine Parts give you peace of mind knowing your replacement part fits and functions to maintain your system's overall performance.

TRAILER SHOCK ABSORBERS Unique Design Features

- Solid Inner Metal Bushings
- Specific Stroke Lengths
- Special Bore Diameters
- Unique Seal Designs

Hendrickson Genuine Shock Absorbers are specially designed to:

- Offer superior fit and functionality
- Withstand Hendrickson's high torque level requirements on the mounting bolt
- Improve damping life
- Reduce overall maintenance of your Hendrickson suspension system
- Optimize system performance

Hendrickson Genuine Parts *are the same quality components installed in Hendrickson original equipment suspensions — consisting of the same design, construction, performance and durability. There's only one way to maintain and protect your suspension's original performance. Ask for the name that is synonymous with the finest manufactured suspensions in the world.*

- Exclusive patented ride technology
- No shocks needed
- Uniform & consistent suspension damping

VANTRAAX® HKANT 40K

INTRAAX® AAT 23K / 25K

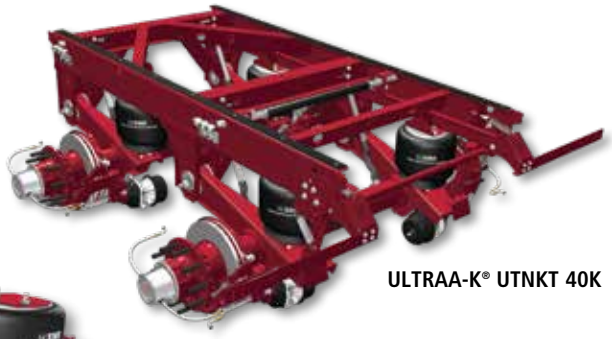

ULTRAA-K® UTNKT 40K

INTRAAX® AANT 23K

Exclusive, Patented▲ Ride Technology

With a reputation for innovative ride solutions, Hendrickson once again raises the bar with its patented ZMD® ZERO MAINTENANCE DAMPING® technology. ZMD is only available through Hendrickson and ushers in a new era of superior ride quality and enhanced maintenance savings.

No Shocks Needed

Available on select VANTRAAX® and INTRAAX® systems and standard on ULTRAA-K® systems, ZMD eliminates conventional shock absorbers and integrates the damping function into the air spring. ZMD air springs exchange pressurized air through channels that interconnect the bellows and piston of this patented air spring.

Uniform Damping, Reduced Maintenance

Unlike a shock absorber whose damping capacity is finite and deteriorates with age, ZMD air springs are designed to provide continuous damping over the life of the air spring. Robust down stops provide maximum durability which helps reduce labor, costs and maintenance over the life of the trailer.

▲ This product is covered by at least one or more U.S. and/or foreign patents and/or pending U.S. and/or foreign patent applications. See Hendrickson for details.

ZMD® Features and Benefits

Patented Air Spring

- Superior ride quality and driver comfort
- Reduced overall suspension maintenance
- Uniform damping levels over the life of the air spring
- Enhanced cargo protection
- Increased trailer component life

Robust Down Stop

- Reduced labor and costs
- Less maintenance
- Reduced risk of roadside inspections and CSA violations

WARRANTY TERMS		
ITEM	PARTS	LABOR
ZMD "Shockless" Ride Technology		
ZMD Air Springs ZMD Down Stops	3 years	3 years
Traditional Air Springs & Shock Absorbers		
Air Springs	2 years	1 year
Shock Absorbers	2 years	2 years

**See L583 Comprehensive Warranty Statement or contact Hendrickson for complete warranty terms, conditions and limitations.*

Tested and proven ride technology from Hendrickson

Hendrickson's state of the art research and development, testing and real-world driving evaluations have shown that ZMD® technology provides superior suspension damping, which offers enhanced ride quality, driver comfort and cargo protection.

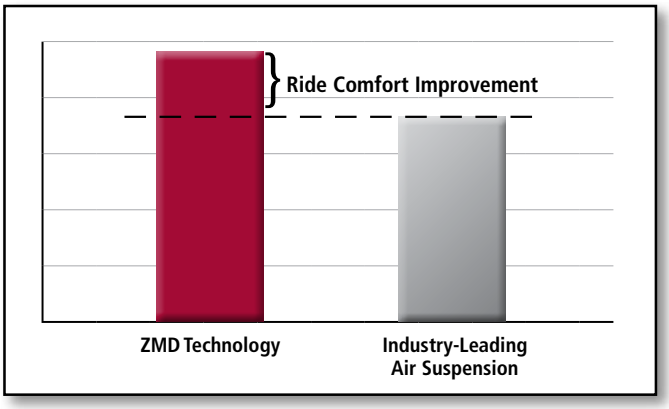

Ride Quality

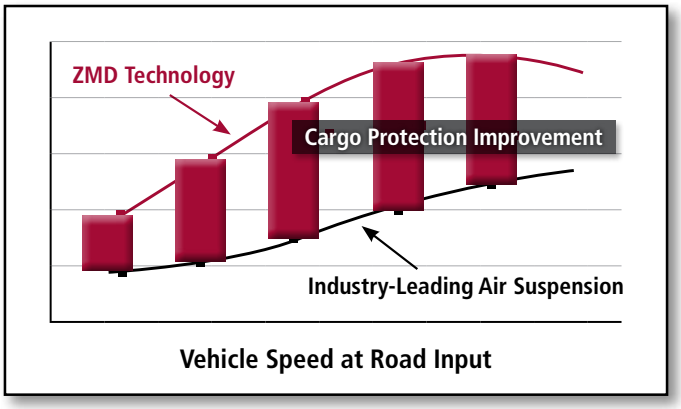

Cargo Protection

Specifications

MODEL	SYSTEM CAPACITY (pounds)	AXLE DIAMETER	RIDE HEIGHTS (inches)	NOTES
ULTRAA-K®				
UTKNT 40K	40,000	LDA™ Large-Diameter Axle	16	Standard
VANTRAAX®				
HKANT 40K	40,000	LDA	16	Optional; Requires QUIK-DRAW®
INTRAAX®				
AANT 23K	23,000	LDA	14, 15, 16, 17	Optional; Standard travel only
AAT 23K*	23,000	LDA	14, 15, 16, 17	Optional; Standard travel and limited rebound*
AAT 25K*	25,000	LDA	14, 15, 16, 17, 18, 19	Optional; Standard travel and limited rebound*

**RCA Raised-Center Axle is available on AAT 23K / 25K models equipped with ZMD for both standard and limited rebound travel. Only 14" or 16" ride heights are available with limited rebound travel when spec'ing RCA.*

ZMD® Frequently Asked Questions

1. **What is ZMD® ZERO MAINTENANCE DAMPING® technology?**
   ZMD ZERO MAINTENANCE DAMPING technology consists of a patented▲ air spring and a down stop that are designed to replace the function of a standard shock absorber to help lower maintenance, improve ride quality and enhance cargo protection.

2. **What are the benefits of ZERO MAINTENANCE DAMPING technology?**
   ZMD offers improved ride quality and helps lower maintenance over the trailer's life cycle due to the elimination of the shock absorbers. It provides better cargo protection and reduces the risks associated with possible CSA violations of applicable U.S. Federal Motor Carrier Safety Administration regulations.

3. **What are the advantages of ZMD air springs compared to shocks over the lifetime of the trailer?**
   Shocks are a common maintenance item on air suspensions that must be replaced periodically. Over time, as shocks wear, their damping capabilities also diminish. ZMD air springs are designed to provide continuous and consistent damping levels throughout the life of the air springs. Since there are no shocks to wear out, the ZMD option helps save time and labor costs over a trailer's life cycle.

4. **What are the key design features of ZMD air springs?**
   The main components of a ZMD air spring are similar to those of a standard air spring - both have a rubber bellow and a steel or plastic piston. The internal design components of this patented air spring are specifically designed to perform the suspension damping function traditionally performed by the shock.

5. **How does a ZMD air spring work?**
   The ZMD air spring exchanges pressurized air between the bellows and piston through channels that interconnect to provide continuous suspension damping.

6. **Traditionally, shock absorbers are responsible for controlling the travel of a suspension to prevent overextending the air springs. Since ZMD eliminates the shocks, how will the travel be controlled?**
   The ZERO MAINTENANCE DAMPING design features down stops to limit suspension travel. The down stops are installed where the shocks would traditionally be.

7. **Is ZMD available on all suspension systems?**
   NO. Currently ZMD is standard on ULTRAA-K® air slider systems. It is an option on select VANTRAAX® and INTRAAX® models. Only VANTRAAX HKANT 40K with a 16-inch ride height equipped with Hendrickson's QUIK-DRAW® fully pneumatic pin-pull system are available with ZMD. INTRAAX AANT 23K and AAT 23K / 25K models with a 14-inch through 17-inch ride height and standard travel are available with ZMD. INTRAAX AAT 23K / 25K RCA models with a 14-inch or 16-inch ride height and limited rebound travel are available with ZMD.

8. **Is ZMD the only option available when specifying a new VANTRAAX or INTRAAX suspension?**
   On select VANTRAAX HKANT 40K models and select INTRAAX AANT 23K and AAT 23K / 25K models, ZMD is an option that is available to customers who wish to upgrade their suspension. Customers still have the option of specifying a suspension with standard air springs and shocks on the HKANT 40K, AANT 23K and AAT 23K / 25Kmodels.
   (Please refer to Hendrickson Literature Numbers L602 INTRAAX Ordering Guide, L544 VANTRAAX Ordering Guide and L1226 ULTRAA-K Ordering Guide for a complete list of options)

9. **Can ZMD be retrofitted on existing trailers in service?**
   YES. ZMD air springs and down stops can be retrofitted on select VANTRAAX and INTRAAX models with the following specifications. VANTRAAX HKANT 40K models require a 16-inch ride height and QUIK-DRAW®. ZMD is compatible with Hendrickson's SURELOK® device. INTRAAX AANT 23K and AAT 23K / 25K models are available with 14-inch through 17-inch ride heights and standard travel. INTRAAX AAT 23K / 25K RCA models are available with 14- or 16-inch ride heights and limited rebound travel. Please call Hendrickson for assistance in ordering a ZMD retrofit kit.

10. Is ZMD® technology compatible with lift kits or lift systems?

ULTRAA-K® UTKNT 40K and VANTRAAX® HKANT 40K suspensions equipped with ZMD technology are incompatible with Hendrickson lift systems. INTRAAX® AANT and AAT 23K / 25K suspensions equipped with ZMD technology are compatible with Hendrickson's recommended lift kits. Refer to Hendrickson Literature Number L801 Liftable Application Guide for more information on lift kit availability for AANT 23K and AAT 23K / 25K suspensions.

11. Is ZMD technology compatible with RCA Raised-Center Axles?

INTRAAX AAT 23K / 25K suspensions equipped with ZMD are compatible with RCA. AAT 23K / 25K models specified with standard travel and 14-inch through 17-inch ride heights are available. AAT 23K / 25K models specified with limited rebound travel and 14-inch or 16-inch ride heights are available. RCA is recommended with limited rebound travel.

12. Are replacement ZMD air springs available in the aftermarket?

YES. ZMD air springs and down stops are available in the aftermarket. Contact your Hendrickson Customer Service Representative for more details.

13. Why is ZMD limited to specific ride heights on ULTRAA-K, HKANT 40K and select top-mount INTRAAX models?

ZMD is currently limited because this patented air spring is rated for 20K axle applications. Additionally, the down stop has been rigorously tested for these specific applications.

14. How are ZMD air springs installed?

ZMD air spring installation procedures and mounting hardware are identical to standard air spring and shock installation procedures. To install ZMD air springs as a retrofit, simply remove the existing shocks and air springs and replace with ZMD air springs and down stops. The select INTRAAX AANT 23K models that are available with ZMD require an additional bolt to be added to the shock clevis on winged hangers only. Follow all applicable Hendrickson installation, service, maintenance and repair procedure publications.

15. Can standard air springs be mixed with ZMD air springs?

NO. Mixing ZMD air springs with standard air springs is not recommended. While the load curves for each product are somewhat similar, they provide different damping performance to the suspension system. Mixing ZMD and standard air springs on the same suspension can adversely affect the operation and life of other integral suspension components.

16. Can ZMD air springs equipped on VANTRAAX® and INTRAAX suspensions be interchanged?

NO. Both ZMD and standard air springs are specially designed to meet the needs and geometry of the specific application. It is important to use only the exact air springs specified by Hendrickson for each model to ensure maximum operation performance and life of components.

17. How can customers tell the difference between a ZMD air spring and a standard air spring?

The customer must visually inspect the air spring to verify the type of air spring.

Identifiers include:

- **ZMD embossed on the bellows**
- **Part number**
- **Down stop instead of shocks**
- **Sealed piston bottom**
- **Black plastic on ULTRAA-K**

Similar to today's standard air springs, the Hendrickson part number will be located on the ZMD air spring bellows.

18. Is there slack in the down stop on ZMD?

YES. There is slack in the down stop to allow 3 to 4 inches of suspension travel on ULTRAA-K® and VANTRAAX HKANT 40K models. The select top-mount INTRAAX models available with ZMD will allow for 2 inches of suspension travel.

19. Will the down stop kink or twist?

The down stop cover helps prevent the down stop from twisting and kinking at installation and while the trailer is in service.

20. Is the air-up time the same on ZMD® air springs as on standard air springs?

NO. ZMD has a slightly longer air-up time but it is not significant.

21. What suspension load scale kit should be used for ZMD?

VANTRAAX® HKANT 40K and select top-mount INTRAAX® models equipped with ZMD use the same load scale kits available for models equipped with standard air springs. Please refer to Hendrickson Literature Number L1182 Controls Parts Catalog for a complete listing of load scale kits.

22. How do I inspect ZMD air springs and down stops?

A visual inspection of the components during regularly scheduled trailer maintenance is all that is required. There are no additional component inspection requirements for ZMD. Follow all applicable Hendrickson installation, service, maintenance and repair procedure publications.

23. What is the suspension jounce for a ZMD air spring?

The ZMD air spring is designed to provide the same suspension jounce travel as the standard air springs on the select VANTRAAX and INTRAAX suspensions.

24. Can the ZMD down stops be interchanged on ULTRAA-K®, VANTRAAX® HKANT 40K and top-mount INTRAAX® models?

NO. The ZMD down stops equipped on ULTRAA-K, VANTRAAX HKANT 40K and top-mount INTRAAX models are not interchangeable with one another.

25. Can a shock absorber be used to replace the down stop(s) on a suspension equipped with ZMD?

There are no shock absorbers that will properly fit the ULTRAA-K suspension. Replacing a down stop with a shock is not recommended for the VANTRAAX HKANT 40K models equipped with ZMD air springs. The same is true for the select top-mount INTRAAX models available with ZMD.

26. Does ZMD require any special plumbing, height control valves or other valves?

NO. The ZMD air spring can be installed exactly the same as current air springs including all mounting bolts, air lines and valves.

27. What are the visual differences between the ULTRAA-K, VANTRAAX and INTRAAX ZMD down stops?

The ULTRAA-K ZMD down stop mounts within the cross member. It features a partial rod with a chain connection.
The VANTRAAX ZMD down stop is a full chain that is installed to the outside of the cross member by a shock clevis.
The INTRAAX ZMD down stop is a full chain that is installed to the frame bracket by a shock clevis.

Hendrickson genuine replacement cam tubes

Hendrickson's revolutionary Cam Tube System™ is patented▲ with a unique 4-tabbed design. Engineered to perform, this 4-tabbed Cam Tube System is manufactured with tight tolerances creating a clamping force that is symmetric around the cam tube.

▲ This product is covered by at least one or more U.S. and/or foreign patents and/or pending U.S. and/or foreign patent applications. See Hendrickson for details.

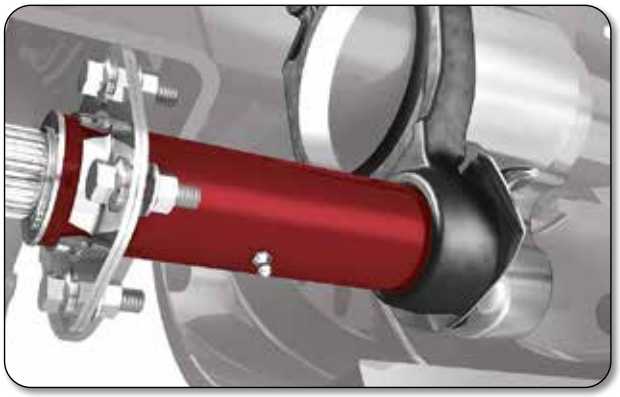

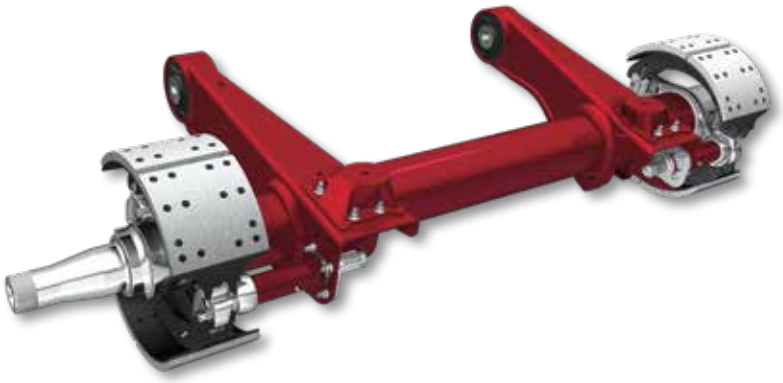

Hendrickson's 4-Tabbed Design | Competitor's 2-Tabbed Design | Competitor's O-Ring Design

Structural Design

Hendrickson's 4-tabbed design is manufactured to perform.

- The symmetric clamping holds the cam tube in position to help prevent cam tube rotation, which can cause premature wear to the brake spiders and could result in an expensive replacement of the HALFTRAAX™ axle / beam weldment.

Bent washer design provides increased durability and resistance to rotation versus the flat design.

- Bent to allow the washer to be common between a 15" and 16.5" diameter INTRAAX® brake.

Mechanical Properties

Hendrickson's cam tube clamping bracket is manufactured using high-strength, low alloy, high quality steel.

- On certain will-fit brands of cam tubes, testing indicates the clamping bracket mechanical properties have a lower torque causing less resistance to movement than Hendrickson's bracket.
- The clamping force will not deform the plate.

Hendrickson's cam tube bushing has internal lubricants to reduce friction and extend wear life.

- Many competitor bushings are glass-filled nylon and have NO internal lubricants.

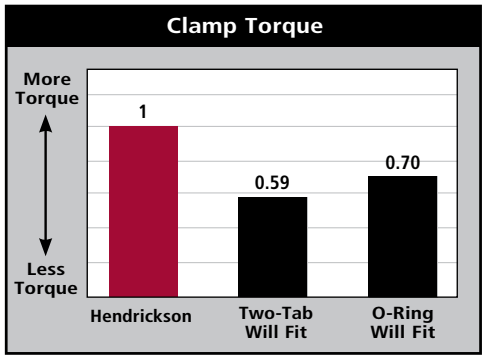

Above clamp torque data is based upon internal testing

NOTE: Look for the orange label with the black-filled slack adjuster image and **L748 B 08-05** on the bottom edge of the label to ensure that it is a Hendrickson Genuine Part.

NOTES

Recommended Stocking List

L1181 - Dealer Recommended Stocking List 20

Dealer Recommended Stocking List

Directions: This stock list is a recommendation of Hendrickson's most common kits sold in the aftermarket. Descriptions are provided for components to allow you to choose the correct kits to stock based on the type of Hendrickson trailer suspensions most common at your facility.

DESCRIPTION	PART NO.	RECOMMENDED STOCK QTY.
AIR SPRINGS		
INTRAAX® AAT 23K, AANT 23K suspensions VANTRAAX® HKANT 40K slider (Below 16" RH)	S-21800	5
INTRAAX AAT 25K suspension	S-20901	2
INTRAAX AAT 30K suspension	S-25873	1
VANTRAAX HKANT 40K slider (16" RH and above) (Units built before Jan 2008)	S-22948	2
VANTRAAX HKANT 40K slider (16" RH and above) (Units built after Jan 2008)	S-28929	2
VANTRAAX HKAT 46K, HKANT 46K sliders	S-22948	2
HK™ Series HK190T slider	S-22045	2
HK Series HK230 slider	S-22046	1
HT® Series HT190T, HS Series HS190T suspensions	S-20223	2
HT Series HT190U suspension	S-20217	2
HT Series HT230, HS Series HS230 suspensions	S-20010	5
HT Series HT250T, HT250U suspensions	S-20124	2
HT Series HT250US suspension	S-20127	2
HT Series HT300, HS Series HS300 suspensions	S-4771	2
UBL™ UNDER BEAM LIFT™ UBL-001, 002, 003 and 004	S-23114	1
ZMD® AIR SPRINGS		
ULTRAA-K® UTKNT 40K slider (units built before March 2019)	S-34733	4
ULTRAA-K UTKNT 40K slider (units built after March 2019)	S-38000	4
VANTRAAX HKANT 40K slider (16" RH; requires QUIK-DRAW®)	S-33161	4
INTRAAX AANT 23K suspension (14" - 17" RH; Std. travel); Steel Piston INTRAAX AAT 23K suspension (14" - 17" RH – Std. travel); Steel Piston INTRAAX AAT 23K RCA suspension (14" or 16" RH – Limited Rebound Travel); Steel Piston	S-35510	2
INTRAAX AANT 23K suspension (14" - 17" RH; Std. travel); Plastic Piston INTRAAX AAT 23K suspension (14" - 17" RH – Std. travel); Plastic Piston INTRAAX AAT 23K RCA suspension (14" or 16" RH – Limited Rebound Travel); Plastic Piston	S-39400	2
INTRAAX AAT 25K suspension (14" - 19" RH – Std. travel) INTRAAX AAT 25K RCA suspension (14" or 16" RH – Limited Rebound Travel)	S-39401	2

DESCRIPTION	PART NO.	RECOMMENDED STOCK QTY.
AIR SPRING BOLT KITS (One kit required per air spring)		
INTRAAX® AAT 23K, 25K, 30K and AANT 23K suspensions (1.125" thick spacer) INTRAAX AAL 23K, 25K and 30K suspensions (1.125" thick spacer) VANTRAAX® HKANT 40K slider (cast air spring pedestal and 19" RH) VANTRAAX HKAT 46K slider (17" RH) VANTRAAX HKANT 46K slider (19" RH) VANTRAAX HKAT 50K slider (17" RH)	S-22630/2	3
INTRAAX AAT 23K, 25K, 30K and AANT 23K suspensions (1.875" thick spacer) INTRAAX AAL 23K, 25K and 30K suspensions (1.875" thick spacer) VANTRAAX HKANT 40K slider (weld-on air spring pedestal and 15" or 19" RH) VANTRAAX HKAT 46K slider (15" or 18" RH) VANTRAAX HKAT 50K slider (18" RH)	S-22631/2	2
INTRAAX AAT 23K, 25K, 30K and AANT 23K suspensions (3.125" thick spacer) INTRAAX AAL 23K, 25K and 30K suspensions (3.125" thick spacer) VANTRAAX HKANT 40K slider (weld-on air spring pedestal and 15.5" RH) VANTRAAX HKAT 46K slider (19" RH) VANTRAAX HKAT 50K slider (19" RH)	S-22632/2	2
INTRAAX AAT 23K, 25K, 30K and AANT 23K suspensions (no spacer) INTRAAX AAL 23K, 25K and 30K suspensions (no spacer) VANTRAAX HKANT 40K slider (weld-on air spring pedestal and 16", 16.5" or 17" RH) VANTRAAX HKANT 40K slider (cast air spring pedestal and 14"-18" RH) VANTRAAX HKAT 46K slider (16" RH) VANTRAAX HKANT 46K slider (14"-18" RH) VANTRAAX HKAT 50K slider (16" RH) VANTRAAX ULTRAA-K® UTKNT 40K slider	S-22619/2	1
HK™ Series HK190T and HK230 slider (1" air spring spacer)	S-22908/2	1
HK Series HK190T and HK230 slider (2" air spring spacer)	S-22909/2	1

AIR SPRING SPACERS		
Air spring spacer, 1.125"	B-22510-1	2
Air spring spacer, 1.875"	B-22510-2	1
Air spring spacer, 3.125"	B-22510-3	1
Air spring spacer, 0.75"	B-22510-4	1

Dealer Recommended Stocking List

DESCRIPTION	PART NO.	RECOMMENDED STOCK QTY.
SHOCK ABSORBERS (Standard service shown; other options exist — contact Hendrickson)		
INTRAAX® AAT 23K, AANT 23K and AAT 25K suspensions INTRAAX AAL 23K and 25K suspensions (12" RH) VANTRAAX® HKAT 46K and HKANT 46K sliders VANTRAAX HKAT 50K slider	S-23566	2
INTRAAX AAL 23K and 25K suspensions (14"-19" RH) HT® Series HT250T suspension	S-2212	2
INTRAAX AAL 23K and 25K suspensions (6.5"- 9" RH)	S-23651	2
VANTRAAX HKANT 40K slider	S-24088	3
INTRAAX AAT 30K suspension	S-24023	2
HK™ Series HK190T and HK230 sliders	S-21292	3
HT Series HT190T, HT190U, HS Series HS190T suspensions	S-20001	2
HT Series HT230, HT250U, HS Series HS230 suspensions	S-20002	3
HT Series HT250US suspension (5.5" and 6.5" RH)	S-23650	2
HT Series HT250US suspension (7.5"-14" RH)	S-23649	2
HT Series HT300, HT300US, HS Series HS300 suspensions	S-20126	2
SHOCK BOLT KITS (One kit required per air spring)		
INTRAAX AAT 23K, 25K and 30K suspensions VANTRAAX HKAT 50K slider	S-24021	2
INTRAAX AANT 23K suspension VANTRAAK HKANT 40K slider VANTRAAX HKAT 46K slider VANTRAAX HKANT 46K slider	S-24049/2	1
Most HT/HS Series190T, 230, 250T, 190U, 300T suspensions	S-20031/2	1
Most HT Series HT250U, 300T, 300US, 230 suspensions (remote shock)	S-2157/2	1
HT Series HT250US suspension	S-24024	1
ZMD® SHOCK CLEVIS BOLT KIT		
INTRAAX AANT 23K Suspension (14" - 17" RH; Std. travel; winged hangers only)	S-37219	2
ZMD DOWN STOP		
VANTRAAX HKANT 40K slider (16" RH; Requires QUIK-DRAW®) INTRAAX AANT 23K suspension (14" RH; 16" with bolt-on frame brackets; Std. travel) INTRAAX AAT 23K suspension (14" RH - Std. travel) INTRAAX AAT 23K RCA suspension (14" or 16" RH – Limited Rebound Travel)	S-33669	4
INTRAAX AANT 23K suspension (15" and 17" RH; 16" RH with weld-on frame brackets; Std. travel) INTRAAX AAT 23K suspension (15" - 17" RH; Std. travel)	S-33669-3	2
ZMD DOWN STOP BOLT KIT		
VANTRAAX HKANT 40K slider (16" RH; Requires QUIK-DRAW) INTRAAX AANT 23K suspension (14" - 17" RH; Std. travel) INTRAAX AAT 23K suspension (14" RH – 17" RH – Std. travel) INTRAAX AAT 23K RCA suspension (14" or 16" RH – Limited Rebound Travel)	S-24049/2	4

DESCRIPTION	PART NO.	RECOMMENDED STOCK QTY.
ZMD DOWN STOP KIT (Includes down stop and hardware)		
ULTRAA-K UTKNT 40K slider (units after March 2017)	S-38100-1	4
PIVOT BUSHING KITS (Includes bushing, pivot bolt kit, wear pads and lubricant)		
QUIK-ALIGN®, wide bushing	S-24691	4
QUIK-ALIGN, narrow bushing (includes 2 bushings)	S-26321	3
Welded alignment, wide bushing	S-6914	4
PIVOT CONNECTION HARDWARE		
Alignment collar — most welded alignments	S-2770	4
Alignment collar — QUIK-ALIGN® concentric (inner)	S-20924	4
Alignment collar — QUIK-ALIGN eccentric (outer)	S-20925	4
Bushing tube spacer — wide pivot connection	S-21099	4
Bushing tube spacer — narrow pivot connection	S-26807	4
PIVOT BOLT KITS (Alignment collars not included)		
QUIK-ALIGN, wide bushing	S-24679	4
QUIK-ALIGN, narrow bushing	S-24705	4
U-BOLT KITS (One U-bolt with nuts and washers)		
HT® Series HT250US suspension (5.5" and 6.5" RH, flattened bolt)	S-22894/4	1
Most HT/HS Series top-mount and HT Series underslung HT190U suspensions	S-21140/4	2
Axle spacer (Must use with flattened U-bolt)	S-20701	2
TOOLS		
Bushing Tool, wide bushing	S-21307	1
Bushing Tool, narrow bushing	S-24736	1
E-20 socket — 1" drive	S-24536	1
QUIK-DRAW® PNEUMATIC PIN PULL SYSTEM		
Three-way auto reset valve with fittings	VS-25224	2
Three-way auto reset valve	VS-25223	2
48" & 54" box front actuator (cast iron – units built before Feb. 2015)	S-28061-2	1
48" & 54" rear actuator (cast iron – units built before Feb. 2015)	S-28062-2	1
48" & 54" box front actuator with fittings (composite – units built in and after Feb. 2015)	S-35294-2	1
48" & 54" rear actuator with fittings (composite – units built in and after Feb. 2015)	S-35295-2	1
SLIDER LOCKING PIN		
UNITS BUILT BEFORE SEPT. 2012		
1.375" Diameter, 4" hole center (TTMA)	S-28290	4
1.375" Diameter, 6" hole center	S-28290	4
1.625" Diameter, 4" hole center	S-28289	4
UNITS BUILT AFTER SEPT. 2012 – 40K & 50K / JULY 2014 – other VANTRAAX®		
1.375" Diameter, 4" hole center (TTMA)	S-32389	4
1.375" Diameter, 6" hole center	S-32389	4
1.625" Diameter, 4" hole center	S-32388	4

Dealer Recommended Stocking List

DESCRIPTION	PART NO.	RECOMMENDED STOCK QTY.
SLIDER ACCESSORIES		
Body rail clip — 2" hole centers (HS slider)	S-22366	2
Body rail clip — 1.5" hole centers (HS slider)	S-14108	2
Body rail clip — use with 6" hole centers and 1.375" lock pin	S-24460	2
Body rail clip — use with 4" hole centers and 1.625" locking pin	S-24459	2
SURELOK® air spring actuator assembly	S-25593	2
BOLT-ON END STOP (ULTRAA-K® 4" body rail hole spacing only)		
Left front rail and right rear rail — .188" thickness	S-34821-1	2
Right front rail and left rear rail — .188" thickness	S-34821-2	2
Left front rail and right rear rail — .232" thickness	S-35761-1	2
Right front rail and left rear rail — .232" thickness	S-35761-2	2
VALVES AND HARDWARE		
Height control valve	VS-227	4
Height control valve — ULTRAA-K® UTKNT 40K slider	VS-33704-3	5
Bolted link assembly	S-14187	3
4-way push pull system — for use with SURELOK® system	VS-14179	1
3-way ball valve	VS-22535	2
Differential height control valve with dump for DST®	VS-27116	1
4-way air pilot valve	VS-2552	1
3-way air pilot valve	VS-23588	1
TIREMAAX® ACCESSORIES		
CP or CP Integrated controller assembly	VS-29865-100	OPTIONAL
PRO controller assembly	VS-32074-100	OPTIONAL
EC or CP hubcap — HN grease (spindle-mounted rotary union)	VS-29566-1	2
EC or CP hubcap — HN oil (spindle-mounted rotary union)	VS-29566-3	2
EC or CP hubcap — HP grease (spindle-mounted rotary union)	VS-29566-2	2
EC or CP hubcap — HP oil (spindle-mounted rotary union)	VS-29566-4	2
CP Integrated hubcap — HN oil (hubcap-mounted rotary union)	VS-32068-1	2
CP Integrated hubcap — HN grease (hubcap-mounted rotary union)	VS-32068-3	2
CP Integrated hubcap — HP oil (hubcap-mounted rotary union)	VS-32070-1	2
CP Integrated hubcap — HP grease (hubcap-mounted rotary union)	VS-32070-3	2
PRO hubcap — HN oil (hubcap-mounted rotary union)	VS-32055-1	2
PRO hubcap — HN grease (hubcap-mounted rotary union)	VS-32055-3	2
PRO hubcap — HP oil (hubcap-mounted rotary union)	VS-32056-1	2
PRO hubcap — HP grease (hubcap-mounted rotary union)	VS-32056-3	2
Adapter Plug 18-inch; 3-way connector	VS-29857	1
ABS junction harness 15-foot; 3-way connector	VS-30270	1
ABS junction harness 3-foot; 3-way connector	VS-30270-1	1
EC or CP stainless steel tire hose, straight — Dual, 17" tire size or super single, 22.5" tire size	VS-29003-1	4

DESCRIPTION	PART NO.	RECOMMENDED STOCK QTY.
TIREMAAX® ACCESSORIES (Continued)		
EC or CP stainless steel tire hose, 180 degree — dual (22.5", aluminum or steel)	VS-29004-2	4
PRO or CP Integrated stainless steel tire hose, straight — dual (22.5", aluminum or steel)	VS-31503-1	4
PRO or CP Integrated stainless steel tire hose, 180 degree — dual (22.5", steel or combo)	VS-31504-2	4
PRO or CP Integrated stainless steel tire hose, straight — super single (22.5", aluminum or steel)	VS-31503-3	2
PRO or CP Integrated thermoplastic tire hose, straight — dual (22.5", steel or combo)	VS-33767-1	4
PRO or CP Integrated thermoplastic tire hose, straight — dual (22.5", aluminum)	VS-33767-5	4
PRO or CP Integrated thermoplastic tire hose, 180 degree — dual (22.5", aluminum steel or combo)	VS-33769-1	8
PRO or CP Integrated thermoplastic tire hose, straight – super single (22.5", aluminum and steel)	VS-33767-3	2
EC or CP tee fitting — dual	VS-29854	4
EC or CP elbow fitting — super single	VS-30002	4
EC or CP tee fitting guard — for use with stemco extended hubcaps	VS-30451	4
EC or CP rotary union kit	S-28622	4
EC or CP Axle hose clamp	VS-26451	2
EC or CP spindle plug assembly — HN (1.75")	VS-27448	2
EC or CP spindle plug assembly — HP (2.50")	VS-27839	2
EC or CP axle hose for INTRAAX® / VANTRAAX® suspensions	VS-29094-1	1
PRO or CP Integrated spindle plug assembly — HN (1.75")	VS-33092-1	1
PRO or CP Integrated spindle plug assembly — HP (2.75")	VS-33092-2	1
PRO or CP Integrated axle hose for INTRAAX / VANTRAAX suspensions	VS-32087-1	1
PRO or CP Integrated axle vent for INTRAAX / VANTRAAX suspensions	VS-32101	1
Target Gauge – CP with spindle-mounted rotary union	VS-30468	1
Target Gauge – CP with hubcap-mounted rotary union	VS-32344	1
Target Gauge – PRO	VS-32331	1
Trailer Mounted Indicator light kit - Incandescent	VS-28059	1
Plug driver — handle	S-27399	1
Plug driver — HN (1.75")	S-28146-1	1
Plug driver — HP (2.75")	S-28146-3	1

AIR DISC BRAKE COMPONENTS

HENDRICKSON / MAXX22T™

Pad kit	S-35303-1	Minimum of 4
Caliper - Left Handed	S-35973-L	1
Caliper - Right Handed	S-35973-R	1
Guide bolt kit	S-35303-4	2
Gasket kit	S-32676-3	1
Basic tool kit (Contains 4 tools to use on all WABCO ADB)	S-32676-5	1 Kit
MAXX22T tool kit (Contains one tool that can be used on either MAXX22T or MAXXUS)	S-35303-6	Pick either basic or WABCO
Air chamber, Type 18/24, INTRAAX® AAT/AANT - Left Handed	S-38721-L	2
Air chamber, Type 18/24, INTRAAX AAT/AANT - Right Handed	S-38721-R	2
Air chamber, Type 18/24, INTRAAX AAL, AAEDL and AAEDT - Unhanded	S-38721-U	2

Dealer Recommended Stocking List

DESCRIPTION	PART NO.	RECOMMENDED STOCK QTY.
BENDIX ADB22X		
Pad kit	S-29152-2	Minimum of 4
Splined rotor	S-29152-17	2
Caliper - Left Handed	S-33647-2	1
Caliper - Right Handed	S-33647-3	1
Guide pin kit	S-29152-9	2
Air chamber, Type 18/24, INTRAAX® AAT/AANT and TRLAXLE® - Left Handed	S-38105-L	2
Air chamber, Type 18/24, INTRAAX AAT/AANT and TRLAXLE - Right Handed	S-38105-R	2
Air chamber, Type 18/24, INTRAAX AAL, AAEDL and AAEDT - Unhanded	S-38105-U	2
WABCO PAN22		
Pad kit	S-32676-1	Minimum of 4
Caliper - Left Handed	S-33648-2	1
Caliper - Right Handed	S-33648-3	1
Guide bolt kit	S-32676-4	2
Gasket kit	S-32676-3	1
Air chamber, Type 20, INTRAAX AAT/AANT and TRLAXLE - Left Handed	S-32793-L	2
Air chamber, Type 20, INTRAAX AAT/AANT and TRLAXLE - Right Handed	S-32793-R	2
Air chamber, Type 20, INTRAAX AAL, AAEDL and AAEDT - Unhanded	S-32793-U	2
Air chamber, Type 20/24, INTRAAX AAT/AANT - Left Handed	S-38723-L	2
Air chamber, Type 20/24, INTRAAX AAT/AANT - Right Handed	S-38723-R	2
Air chamber, Type 20/24, INTRAAX AAL, AAEDL and AAEDT - Unhanded	S-38723-U	2
S-CAMS		
Most INTRAAX and VANTRAAX suspensions — curbside 28 spline, for HXS® and standard lining,16.5" brakes	S-24636-1R	4
Most INTRAAX and VANTRAAX suspensions — roadside 28 spline, for HXS and standard lining,16.5" brakes	S-24636-1L	4
CAM TUBE SYSTEM™ KITS		
Cam Tube System service kit, 16.5" × 7" Brakes	S-28890	5
DUST SHIELD KITS		
16.5" Dust shield kit for 5" axle	S-28500-1650	4
16.5" Dust shield kit, LDA™ Large-Diameter Axle	S-28500-1657	4

Trailer Suspension and Axle Identification Guide

L977 - Trailer Identification Guide 28

HOW TO IDENTIFY A MODEL

STEP 1. Find the identification tag on the suspension or trailer axle model by referencing the following chart for tag location.

STEP 2. If no tag is found, contact the trailer manufacturer with the necessary information (i.e. trailer serial number) to determine what suspension model is on the trailer.

STEP 3. If no suspension model can be obtained by completing steps 1 and 2, refer to the following pages to help determine what suspension model is on the trailer. See instructions on page 4.

Identification Tag
(VANTRAAX® Tag Shown Above)

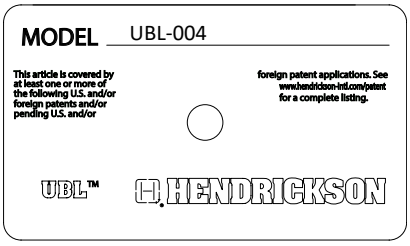

Identification Tag
(UBL™ Tag Shown Above)

WHERE TO FIND ID TAG ON HENDRICKSON AIR SUSPENSIONS

SUSPENSION MODEL	TAG LOCATION
T Primary Suspension	Front of roadside frame bracket or inside of curbside beam
HT® Series Primary Suspension	Inside of curbside beam
INTRAAX® Primary Suspension System	Inside of curbside beam
CONNEX® ST Trailer Self-Steer Suspension	Inside of curbside beam
CONNEX Primary Suspension System	Inside of curbside beam
HS Slider with HT Suspensions	Front cross member on HS box
INTRAAX SP Slider Suspension System	On roadside front frame bracket gusset
HK™ Slider Suspension	On roadside slider box side rail above front frame bracket
VANTRAAX® Slider Suspension System	On roadside slider box side rail above front frame bracket; also has blank INTRAAX tag on inside of curbside beam
ULTRAA-K® Air Slider Suspension System	On roadside front frame bracket

INTRAAX / HT / CONNEX ST / CONNEX
Inboard side of curb side trailing arm

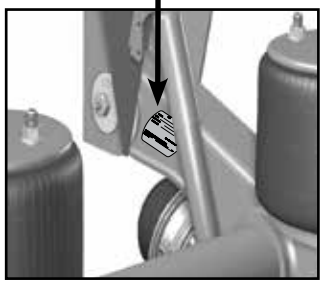

ULTRAA-K
Roadside on front of frame bracket

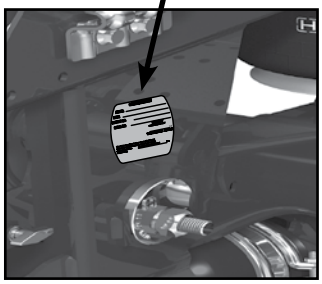

VANTRAAX / HKBOX
Roadside front of side rail on slider box

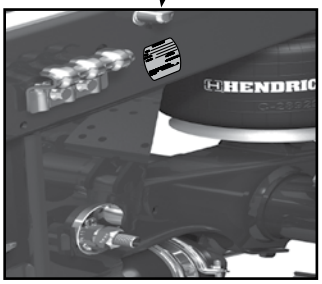

UBL
Roadside of lift bracket

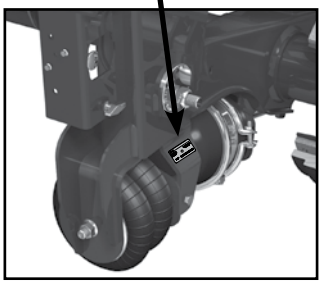

WHERE TO FIND ID TAG ON HENDRICKSON NON-INTEGRATED TRAILER AXLES

The model number, customer part number (if applicable), a description and a serial number are imprinted on an ID tag that is attached to the axle (as shown below).

Before November 2010, trailer axle product ID tags were made of mylar and located near the center of the axle beam. After November 2010, trailer axle products have a stainless steel ID tag located on the inside edge of the brake chamber bracket.

The part number is used to identify the axle specifications. This number should be referred to when contacting Hendrickson to determine the appropriate service parts. The serial number is used to identify a particular axle along with all of the component parts as specified by the customer at the time of order. The axle description serves as a generic description of the axle assembly and can be used to determine some axle configuration parameters.

OLD

Straight Axle

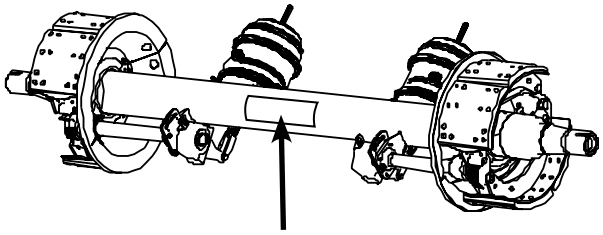

Mylar ID Tag —
Located Near Center of Axle

NEW

Location of New Stainless Steel ID Tag —
On Brake Chamber or near Center of Axle

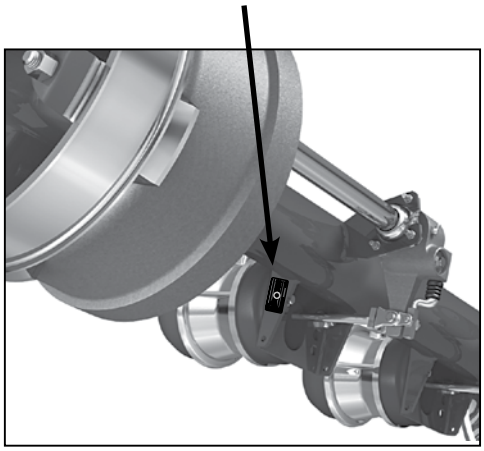

New Stainless Steel ID Tag for Trailer Axles

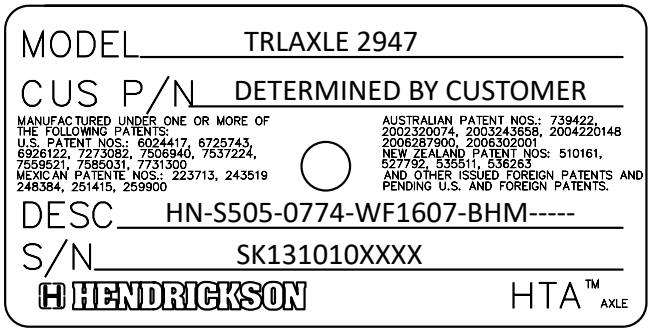

GENERAL GUIDELINES FOR INTERPRETING SUSPENSION DESCRIPTIONS

INTRAAX®

Model: INTRAAX.85901

DESCRIPTION: AANT23K 14RHL77N ST X7 SHD

- AA — Duty Cycle
- N — Pivot Connection
- T — Beam Profile
- 23K — Suspension Capacity
- 14RH — Ride Height
- L — Axle Diameter
- 77 — Axle Track
- N — Spindle
- ST — Axle Wall
- X7 — Brake Size
- SHD — Slack / Hub / Drums (if equipped)

Model: INTRAAX.82164

DESCRIPTION: AAT23K 14RHC L755PST X7 SH

- AA — Duty Cycle
- T — Beam Profile
- 23K — Suspension Capacity
- 14RH — Ride Height
- C — Axle Style
- L — Axle Diameter
- 75 — Axle Track
- P — Spindle
- ST — Axle Wall
- X7 — Brake Size
- SH — Slack / Hub / Drums (if equipped)

INTRAAX® DESCRIPTION MATRIX

Duty Cycle
- AA - Standard
- AAED - Extreme Duty

Pivot Connection
- N - Narrow
- (Blank) - Wide

Beam Profile
- T - Top-Mount
- L - Low-Ride
- LS - Low-Ride Short

Suspension Capacity
- 20K - 20,000 lbs.
- 23K - 23,000 lbs.
- 25K - 25,000 lbs.
- 30K - 30,000 lbs.

Axle Style
- C - Cambered
- RC - Raised Center
- (Blank) - Standard

Axle Diameter
- S - 5.00"
- L - LDA™ (5.75")
- F - Five Inch AAT / AAL Axle

Axle Track
- 70 - 70.5"
- 71 - 71.5"
- 73 - 73.0"
- 75 - 75.0"
- 755 - 75.5"
- 76 - 76.5"
- 77 - 77.5"
- 795 - 79.5"
- 83 - 83.5"
- 85 - 85.0"

Spindle
- N - HN
- P - HP
- CDHP - CD HP
- US - HUS

Axle Wall
- ST - Standard
- HD - Heavy Duty

Brake Size
- X5 - 15" × 8⁵/₈"
- 7 - 16.5" × 7"
- X7 - 16.5" × 7" HXS®
- X8 - 16.5" × 8⁵/₈" HXS
- 415MM - 415 mm MAXX22T™ ADB
- 430MM - 430 mm ADB

Slack Adjuster
- S - Any Brand Selection
- (Blank) - None

Hub Brand
- H - Any Brand Selection
- (Blank) - None

Drum Brand
- D - Any Brand Selection
- (Blank) - None

INTRAAX® SP

Model: INTRAAXSP.3187

DESCRIPTION: AAZNT 46K 14RH L49 38PST X7SHD

Box Type — AAZ
Pivot Connection — N
Beam Profile — T
Suspension Capacity — 46K
Ride Height — 14RH
Axle Diameter — L
Axle Center — 49
I-Beam Center — 38
Spindle — P
Axle Wall — ST
Brake Size — X7
Slack / Hub / Drums (if equipped) — SHD

Model: INTRAAXSP.2503

DESCRIPTION: AAZNT 69K23 14RH L60 43NST X7

Box Type — AAZ
Pivot Connection — N
Beam Profile — T
Suspension Capacity — 69K23
Ride Height — 14RH
Axle Diameter — L
Axle Center — 60
I-Beam Center — 43
Spindle — N
Axle Wall — ST
Brake Size — X7

INTRAAX® SP DESCRIPTION MATRIX

Box Type
- AAZ - Platform Slider Box

Pivot Connection
- N - Narrow
- (Blank) - Wide

Beam Profile
- T - Top-Mount
- L - Low-Ride

Suspension Capacity
- 23K - 23,000 lbs.
- 46K - 46,000 lbs.
- 69K23 - 69,000/23,000 lbs.

Axle Centers
- (Blank) - N/A (Single Axle)
- 49 - 49.0"
- 60 - 60.0"
- 72 - 72.0"

Axle Diameter
- (Blank) - 5.00"
- L - LDA™ (5.75")

I-Beam Centers
- 37 - 37.0"
- 38 - 38.0"
- 43 - 43.0"
- 44 - 44.0"

Spindle
- N - HN
- P - HP
- WP - CD HP
- US - HUS

Axle Wall
- ST - Standard
- HD - Heavy Duty

Brake Size
- 7 - 16.5" × 7"
- X7 - 16.5" × 7" HXS®
- X8 - 16.5" × 8⁵/₈" HXS
- 415MM - 415 mm Hendrickson MAXX22T™ ADB
- 430MM - 430 mm ADB

Slack Adjuster
- S - Any Brand Selection
- (Blank) - None

Hub Brand
- H - Any Brand Selection
- (Blank) - None

Drum Brand
- D - Any Brand Selection
- (Blank) - None

VANTRAAX®

Model: VANTRAAX.12059

DESCRIPTION: HKANT40K 9 16RHL77NST MA7

- HKA — Slider Box Type
- N — Pivot Connection
- T — Beam Profile
- 40K — System Capacity
- 9 — Axle Spread
- 16 — Ride Height
- R — Axle Diameter
- H — Axle Track
- L77 — Spindle
- N — Axle Wall
- ST — Slider Pin Extractor
- MA7 — Brake Size

Model: VANTRAAX.27506

DESCRIPTION: HKARL 46K 9 12RHL77PST QD7SHD

- HKA — Slider Box Type
- RL — Beam Profile
- 46K — System Capacity
- 9 — Axle Spread
- 12 — Ride Height
- R — Axle Diameter
- H — Axle Track
- L77 — Spindle
- P — Axle Wall
- ST — Slider Pin Extractor
- QD7 — Brake Size
- SHD — Slack / Hub / Drums (if equipped)

ULTRAA-K®

Model: ULTRAAK.1010

DESCRIPTION: UTKNT40K 9 16RHL 77PST QD7

- UTK — Slider Box Type
- N — Pivot Connection
- T — Beam Profile
- 40K — System Capacity
- 9 — Axle Spread
- 16 — Ride Height
- R — Axle Diameter
- H — Axle Track
- L 77 — Spindle
- P — Axle Wall
- ST — Slider Pin Extractor
- QD7 — Brake Size

VANTRAAX® / ULTRAA-K® DESCRIPTION MATRIX

Box Type
- HKA - 8" K-2®
- HKAR - 14" Ramp-Ready
- HRR - 8" K-2 for Railroad
- UTK - ULTRAA-K Box

Pivot Connection
- N - Narrow
- (Blank) - Wide

Beam Profile
- T - Top-Mount
- L - Low-Ride

System Capacity
- 23K - 23,000 lbs.
- 40K - 40,000 lbs.
- 46K - 46,000 lbs.
- 50K - 50,000 lbs.
- 69K23 - 69,000/23,000 lbs.
- 69K25 - 69,000/25,000 lbs.

Box Duty
- ST or (Blank) - Standard
- HD or H - Heavy Duty

Axle Centers
- (Blank) - N/A (Single Axle)
- 9 - 49.0"
- 0 - 60.0"
- 2 - 72.0"
- 1 - 121.0"

Axle Diameter
- S - 5.00"
- L - LDA™ (5.75")

Slider Box Width
- 71 - 42.0"
- 77 - 48.0"
- 83 - 54.0"

Spindle
- N - HN
- P - HP
- WP - CD HP
- US - HUS

Axle Wall
- ST - Standard
- HD - Heavy Duty

Slider Pin Extractor
- MA - Manual
- QD - QUIK-DRAW® or QUIK-DRAW No Valve
- FX - None (Pins only for fixed applications)

Brake Size
- 7 - 16.5" × 7"
- X7 - 16.5" × 7" HXS®
- X8 - 16.5" × 8⁵/₈" HXS
- 415MM - 415 mm MAXX22T™ ADB
- 430MM - 430 mm ADB

Slack Adjuster
- S - Any Brand Selection
- (Blank) - None

Hub Brand
- H - Any Brand Selection
- (Blank) - None

Drum Brand
- D - Any Brand Selection
- (Blank) - None

HT® SERIES HT250US

Model: HT250US.1

DESCRIPTION: 6.5 ST WO AS1 SH1 SM SA PK SB

- 6.5 — Ride Height
- ST — Travel
- WO — Frame Attachment
- AS1 — Air Spring Mounting
- SH1 — Shock
- SM — Shock Mounting
- SA — Assembled
- PK — Packaging
- SB — Paint / Color

HT SERIES HT250US DESCRIPTION MATRIX

Travel

ST - Standard
LJ - Limited Jounce
ER - Extended Rebound

Frame Attachment

BO - Bolt-on (1/2-inch)
BO5 - Bolt-on (5/8-inch)
FC - Frame Clearance
HDG - Hot Dip Galvanize Kit (HDG)
SFK - Slider Frame Bracket Kit (SFK)
T1 - 6 Degrees Rotated
T2 - 12.9 Degrees Rotated
WO - Weld-on

Air Spring Mounting

ASNS - Air Spring Plate, No Spacer, Std.
AS1 - Standard Air Spring
AS2 - Rotated Air Spring
AS3 - High PSI Air Spring Standard
AS4 - High PSI Air Spring Rotated
AS5 - High PSI Air Spring Short Bellows
NMR - No Mounting Plate, Rotated
NMS - No Mounting Plate, Standard

Shock

SH1 - Standard
SH2 - Extended Service / High Damping

Shock Mounting

RM - Remote
SM - Standard Mount

Assembled

SA - Assembled
U1 - Unassembled

Packaging

PK - Standard NAFTA
X1 - Standard - Export

Beam Coating

SB - Standard Black Primer
UP - Unpainted
FBP - Full Black Primer

HT® SERIES HT300US/HT300YB

Model: HT300US.1

DESCRIPTION: 5.5RH BO A 5 ST S

- 5.5RH — Ride Height
- BO — Frame Attachment
- A — Assembly
- 5 — Axle Diameter
- ST — Travel
- S — Shock Mount

Model: HT300YB.6

DESCRIPTION: 9RH WO N 5 ST S

- 9RH — Ride Height
- WO — Frame Attachment
- N — Assembly
- 5 — Axle Diameter
- ST — Travel
- S — Shock Mount

HT SERIES HT300US/HT300YB DESCRIPTION MATRIX

Frame Attachment
BO - Bolt-on
WO - Weld-on

Assembly
A - Assembled
N - Nonassembled
U1 - Unassembled
S1 - Separate Frame Kit

Axle Diameter
5 - 5.00"

Travel
ST - Standard
LJ - Limited Jounce
ER - Extended Rebound

Shock Mount
R - Remote
S - Standard Mount

HT® SERIES

MODEL: HT250TB15-001

- HT — Suspension Type
- 250 — Capacity
- T — Beam Profile
- B — Pivot Connection
- 15 — Ride Height
- 001 — Top-Mount Model Suffixes

MODEL: HT250U-9Y-001

- HT — Suspension Type
- 250 — Capacity
- U — Beam Profile
- 9 — Ride Height
- Y — Pivot Connection
- 001 — Underslung Model Suffixes

MODEL: HT250 YS-9-001

- HT — Suspension Type
- 250 — Capacity
- Y — Beam Profile
- S — Pivot Connection
- 9 — Ride Height
- 001 — Y-Beam Model Suffixes

HT® SERIES DESCRIPTION MATRIX

Suspension Type

HT - HT® SERIES Suspension

Capacity

190 - 19,000 lbs.
230 - 23,000 lbs.
250 - 25,000 lbs.
300 - 30,000 lbs.

Beam Profile

T - Top-Mount
U - Underslung
Y - Y-Beam

Frame Bracket Pivot & Expanded Beam Description

A - QUIK-ALIGN® Winged
B - QUIK-ALIGN Wingless;
TB - Top-Mount QUIK-ALIGN Wingless
YB - QUIK-ALIGN; Old Y-Beam Design
C - QUIK-ALIGN Wingless Bolt-on
S - QUIK-ALIGN; Standard / New Y-Beam Design
(Blank) - Weld Align
Y - Welded Alignment Y-Beam

Underslung Model Suffixes

-001 - Standard Primary Suspension (HT190U and HT250U only) or Weld-on (HT300U only)
-002 - Limited Travel
-003 - Sliders — Separate SFK
-004 - Sliders — Pre-assembled
-005 - Drop Deck Applications
-006 - Enhanced Operation (Lower PSI)
-007 - Bolt-on Hangers
-008 - Primary (001) unitized with Threaded Bolt
-020 or Greater — Custom Designs

Suspension TypeTop-Model Suffixes

-001 - Weld-on (Steel) or Sliders — Separate SFK (HT190T only)
-002 - Bolt-on (Aluminum) or Sliders — Pre-assembled (HT190T only)
-003 - Liftable Weld-on (HT230 ride heights 15" & 17" and HT300 only) or Sliders — Separate SFK (HT230 ride heights 14" & 16" and HT250T only)
-004 - Liftable Bolt-on (HT230 ride heights 15" & 17" and HT300 only) or Sliders — Pre-assembled (HT230 ride heights 14" & 16")
-005 - Standard Primary Suspension (HT190 only) or Primary with Threaded Bolt (HT230 ride heights 14", 15" & 16" and HT300 only) or Liftable with Threaded Bolt (HT230 ride height 17" only)
-006 - Primary with Threaded Bolt (HT250T and HT230 ride height 17" only) or Liftable with Threaded Bolt (HT230 ride heights 14", 15" & 16" and HT300 only)
-007 - Remote Shock Primary Weld-on
-008 - Bolt-on Application — No Mounting Plate
-009 - Liftable Weld-on (HT230 ride heights 14" & 16" only) or Sliders — Pre-assembled (HT230 ride heights 15" & 17" only)
-010 - Liftable Bolt-on (HT230 ride heights 14" & 16" only) or Sliders — Separate SFK (HT230 ride heights 15" & 17" only)
-011 - Remote Shock Primary Bolt-on
-012 - Remote Shock Liftable Weld-on
-013 - Sliders — Separate SFK — 4.0" Jounce
-014, -015, -016, -017 & -020 & Greater — Custom Designs

TC - Model Suffixes

-060 - Standard Travel — 1/2" Mounting Bolts
-061 - Standard Travel — 5/8 " Mounting Bolts
-062 - Liftable — 1/2" Mounting Bolts
-063 - Liftable — 5/8 " Mounting Bolts
-064 - Standard Travel — Remote Shock — 1/2" Mounting Bolts
-065 - Standard Travel — Remote Shock — 5/8" Mounting Bolts
-066 - Liftable — Remote Shock — 1/2" Mounting Bolts
-067 - Liftable — Remote Shock — 5/8" Mounting Bolts

YS-Beam Model Suffixes

-001 - High Pressure Air Spring (C-20124) with 16.5" brakes or larger
-006 - Standard Air Spring (C-20127) with 16.5" brakes or larger
-010 - Standard Rotated Air Spring with 16.5" brakes or larger
-101 - High Pressure Air Spring (C-20124) with 12.25" brakes
-106 - Standard Air Spring (C-20127) with 12.25" brakes
-110 - Standard Rotated Air Spring with 12.25" brakes

CONNEX® ST

Model Number: CONNEXST.4

DESCRIPTION: **CXS L 25K 14RH 860 P X7 SHD BO U -**

- CXS: Suspension Type
- L: Beam Profile
- 25K: Suspension Capacity
- 14RH: Ride Height
- 860: Axle Track
- P: Spindle Type
- X7: Brake Size
- SHD: Slack/Hub/Drum (if equipped)
- BO: Frame Attachment
- U: Lift Kit
- -: Tire Inflation System

CONNEX ST DESCRIPTION MATRIX

Suspension Type
CXS - Self-Steer Suspension System

Beam Profile
L - Liftable

Suspension Capacity
25K - 25,000 lbs.

Ride Height
13 RH = 13.0"
14 RH = 14.0"
15 RH = 15.0"
16 RH = 16.0"
17 RH = 17.0"
18 RH = 18.0"
19 RH = 19.0"

Axle Track
775 - 77.5"
800 - 80.0"
835 - 83.5"
840 - 84.0"
850 - 85.0"
860 - 86.0"

Spindle
P - HP

Brake Size
X7 - 16.5" x 7.0" HXS®

Slack Adjuster
S - Any Brand Selection

Hub Brand
H - Any Brand Selection

Drum Brand
D - Any Brand Selection
- (Dash) - No Drums

Frame Attachment
WO - Weld-on
BO - Bolt-on

Lift Kit
U - UBL™ UNDER BEAM LIFT™
- (Dash) - None

Tire Inflation System
T - TIREMAAX® PRO or CP
- (Dash) - None

CONNEX®

Model Number: CONNEX.21

DESCRIPTION: CX U 23K 65RH775 PX1 SHD WO - T

- CX — Suspension Type
- U — Beam Profile
- 23K — Suspension Capacity
- 65RH — Ride Height
- 775 — Axle Track
- P — Spindle Type
- X1 — Brake Size
- SHD — Slack/Hub/Drum (if equipped)
- WO — Frame Attachment
- - — Suspension Lift Kit
- T — Tire Inflation System

CONNEX® DESCRIPTION MATRIX

Suspension Type
CX - Unitized Suspension System

Beam Profile
U - Underslung
Y - Y-Beam
L - Liftable
T - Top-Mount

Suspension Capacity
23K - 23,000 lbs.
25K - 25,000 lbs.

Ride Height
55 RH = 5.5"
65 RH = 6.5"
75 RH = 7.5"
90 RH = 9.0"
15 RH = 15.0"
17 RH = 17.0"

Axle Track
715 - 71.5"
775 - 77.5"

Spindle
N - HN
P - HP

Brake Size
X1 - 12.25" × 7.5" HXS®
X7 - 16.5" × 7.0" HXS
X8 - 16.5" × 8.63" HXS

Slack Adjuster
S - Any Brand Selection

Hub Brand
H - Any Brand Selection

Drum Brand
D - Any Brand Selection
- (Dash) - No Drums

Frame Attachment
WO - Weld-on
BO - Bolt-on

Suspension Lift Kit
U - UBL™ UNDER BEAM LIFT™
- (Dash) - None

Tire Inflation System
T - TIREMAAX® PRO or CP
- (Dash) - None

GENERAL GUIDELINES FOR INTERPRETING NON-INTEGRATED AXLE DESCRIPTIONS

TRLAXLE®

Model Number: TRLAXLE.11885

DESCRIPTION: **HP-S505T0774-WE1670LCBBB15CFDA**

Spindle, Axle Type, Axle Diameter, Tube Wall, Tire Inflation, Axle Track, Auto Lube, Spider Type, Brake Type, Brake Size, Cam Length, Cam Option, ABS Option, Brake Adjusters, Chambers, Hubs, RTR Packages, Drums, RTR Lube, Dust Shields, Brake Shoe Coating

Model Number: TRLAXLE.14669

DESCRIPTION: **HP-S505-0774-WE1670LCB-------S**

Spindle, Axle Type, Axle Diameter, Tube Wall, Tire Inflation, Axle Track, Auto Lube, Spider Type, Brake Type, Brake Size, Cam Length, Cam Option, ABS Option, Brake Adjusters, Chambers, Hubs, RTR Packages, Drums, RTR Lube, Dust Shields, Brake Shoe Coating

Model Number: TRLAXLE.14670

DESCRIPTION: **HN-S504-0774-WE1670LCBHT-----S**

Spindle, Axle Type, Axle Diameter, Tube Wall, Tire Inflation, Axle Track, Auto Lube, Spider Type, Brake Type, Brake Size, Cam Length, Cam Option, ABS Option, Brake Adjusters, Chambers, Hubs, RTR Packages, Drums, RTR Lube, Dust Shields, Brake Shoe Coating

TRLAXLE® DESCRIPTION MATRIX

Spindle
- HN® - Tapered Spindle
- HP - Parallel Spindle (Pro-Par Type)
- HPX - Parallel Spindle Cross-drill

Axle Type
- S - Straight
- C - Cambered

Axle Diameter
- 50 - 5" Round
- 56 - 5-¾" Round

Tube Wall
- 4 - ½" Nominal
- 5 - 5/8" Nominal
- H - 5/8" (Heavy Duty)
- 6 - ¾"

Tire Inflation
- T - TIREMAAX®
- P - MTIS / PSI Prepped
- V - Axle Vent Only
- 3 - 3-Hole Prep Only
- - (Dash) - None

Axle Track
- ### - Track Length (inches) 1st 3 Digits
- # - Track Length (1/8") 4th Digit

Auto Lube
- L - Lube System - Fittings Installed
- - (Dash) - None

Spider Type
- B - Bolt-on Spider
- W - Weld-on Spider
- T - Torque Plate for Air Disc Brake
- N - None

Brake Type
- B - B-Lock
- F - Std. Service - Dual Anchor Pin (DAP) - BSFB brand
- P - Pin Style - BSFB brand
- X - HXS® / XLII - Dual Anchor Pin (DAP) - BSFB brand
- D or (Blank) - Air Disc Brake
- - (Dash) - No Brake Shoes
- H - Hendrickson Std. Service - Dual Anchor Pin (DAP)
- N - Hendrickson Pin Style
- E - Hendrickson HXS (DAP)
- C - Cams Only, No Brake Shoes

Brake Size
- 1274 - 12¼" × 7½" brakes
- 1585 - 15" × 8 5/8" brakes
- 1670 - 16½" × 7" brakes
- 1685 - 16½" × 8 5/8" brakes
- 415 - 415mm MAXX22T™ ADB
- 430 - 430mm ADB
- ---- (4 Dashes) - No Brakes

Cam Length
- S - Standard. Short Length (17 5/8")
- M - Standard. Medium Length (20 5/8")
- L - Standard. Long Length (23¾")
- X - Special Length (Non-Standard.)
- - (Dash) - No S-Cams

Cam Option
- C - Cam Tube
- B - Reduced Maintenance Bushing
- - (Dash) - No Special Cam Options

ABS Option
- B - ABS Mounting Bracket Only
- S - ABS Sensor Installed
- - (Dash) - No ABS Sensors / Brackets

Brake Adjusters
- B - Bendix
- G - Gunite
- H - Haldex
- - (Dash) - No Brake Adjusters

Chambers
- W - Meritor Wabco
- B - Bendix
- H - Haldex
- K - Air Disc Brake Only
- T - TSE
- - (Dash) - No Chambers

Hubs
- 1 - 10-stud, hub-piloted - 1st Digit
- 8 - 8-stud, hub-piloted - 1st Digit
- - (Dash) - No Hubs - 1st Digit

RTR® READY TO ROLL® Packages
- V - HVS® 3-yr - 2nd Digit
- L - HLS® 5-yr - 2nd Digit
- 3 - HXL3® 3-yr - 2nd Digit
- 5 - HXL5® 5-yr - 2nd Digit
- 7 - HXL7® 7-yr - 2nd Digit
- P - ConMet PreSet - 2nd Digit
- - (Dash) - No RTR or 1-yr Std Service - 2nd Digit

Drums
- C - Cast Drum - 3rd Digit
- F - Fused Drum - 3rd Digit
- - (Dash) - No Drums - 3rd Digit
- 315 - 3-spoke, 15" wheel - All 3 Digits
- 520 - 5-spoke, 20" wheel - All 3 Digits
- 622 - 6-spoke, 22" wheel - All 3 Digits
- 624 - 6-spoke, 24" wheel - All 3 Digits

RTR Lube
- G - Grease
- F - Syn. Semi-Fluid Grease
- O - 80W - 90 Oil
- S - SAE 50 or 75W - 90 Synthetic
- - (Dash) - None

Dust Shields
- D - Dust Shield Included
- - (Dash) - None

Brake Shoe Coating
- A - AAXTREME COAT®
- S or (Blank) - Standard (e-coat)
- N - None

Please note this is not an all-inclusive representation of the possible description values and that all model numbers may not represent the specific model descriptor.

SUSPENSION IDENTIFICATION GUIDE

INSTRUCTIONS

STEP 1. Determine if unit is a primary or slider suspension.

STEP 2. If it is a slider, use the following illustrations to determine the slider box type and the suspension model.

If it is a primary, use the illustrations beginning on page 20 to determine the suspension model.

SLIDER SUSPENSIONS — VAN / REEFER APPLICATIONS

Hendrickson van / reefer slider boxes were manufactured in three designs. In order to determine the box type, check to see if the cross members are in a ladder orientation or if the orientation forms two K's or one K. If the orientation forms a ladder, refer to the illustration below. If the cross members form the "K" orientation, use the dimensions provided on pages 17 and 18 to determine which model that you have.

HS Slider Box

- **HS190 / 230 Tandem**

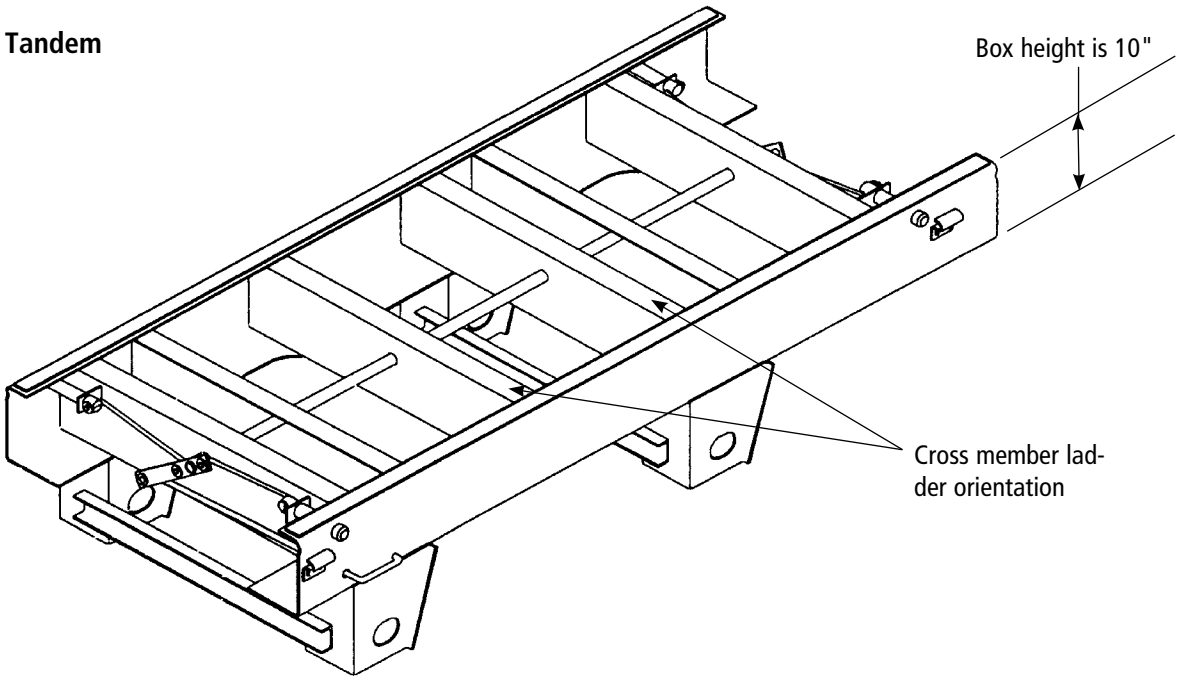

ULTRAA-K® UTKNT Slider Box

- **UTKNT 40K Tandem**

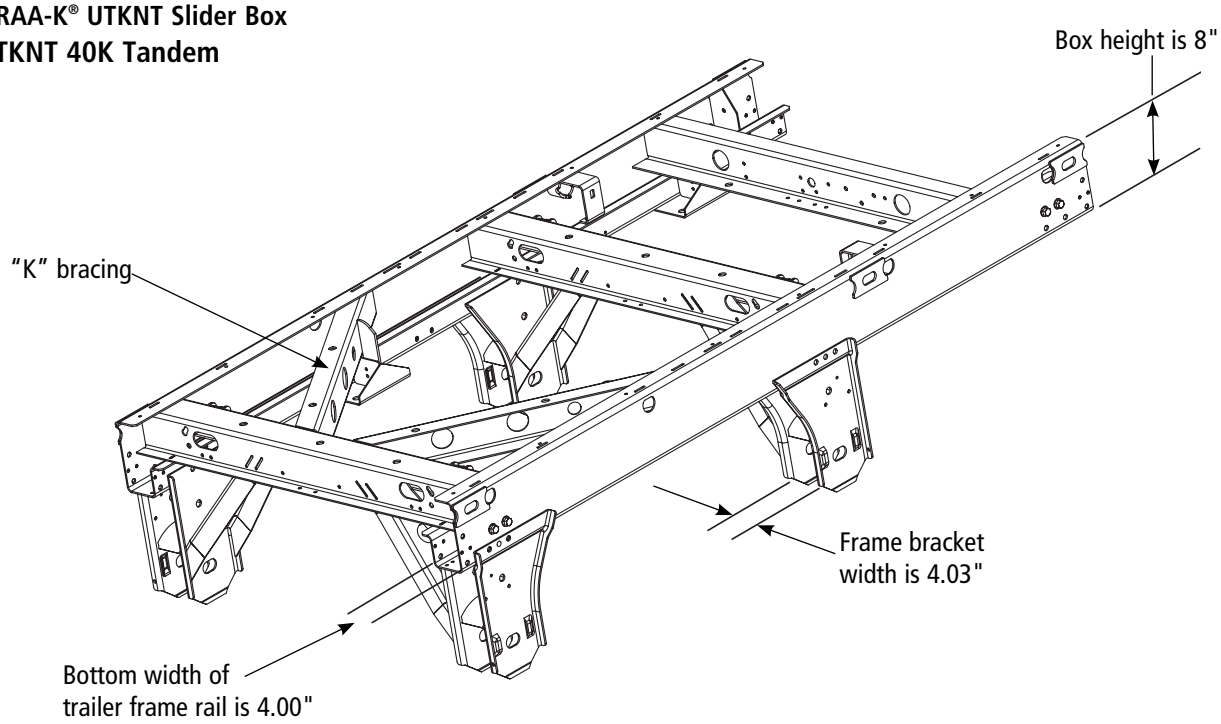

VANTRAAX® HKANT Slider Box

- **HKANT 23K Single**
- **HKANT 40K Tandem**
- **HKANT 46K Tandem**
- **HKANT 46K 121" Wide Spread Tandem**
- **HKANT 69K23 Tridem**

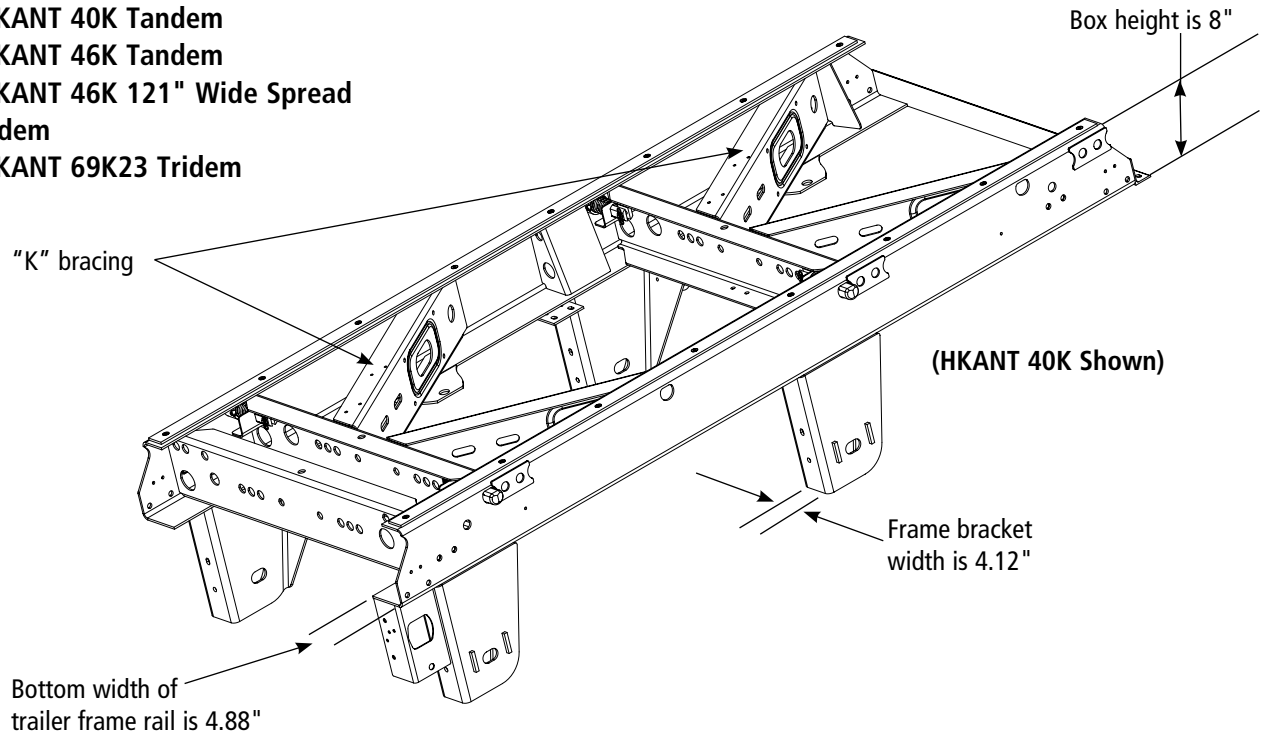

VANTRAAX® HKAT Slider Box
- **HKAT 46K Tandem**
- **HKAT 50K Tandem (K-brace Reinforced)**
- **HKAT 69K23 Tridem**
- **HKAT 69K25 Tridem**

VANTRAAX HKAL Slider Box
- **HKAL 46K Tandem**

HK Series Slider Box
- **HK190 / 230 Tandem**

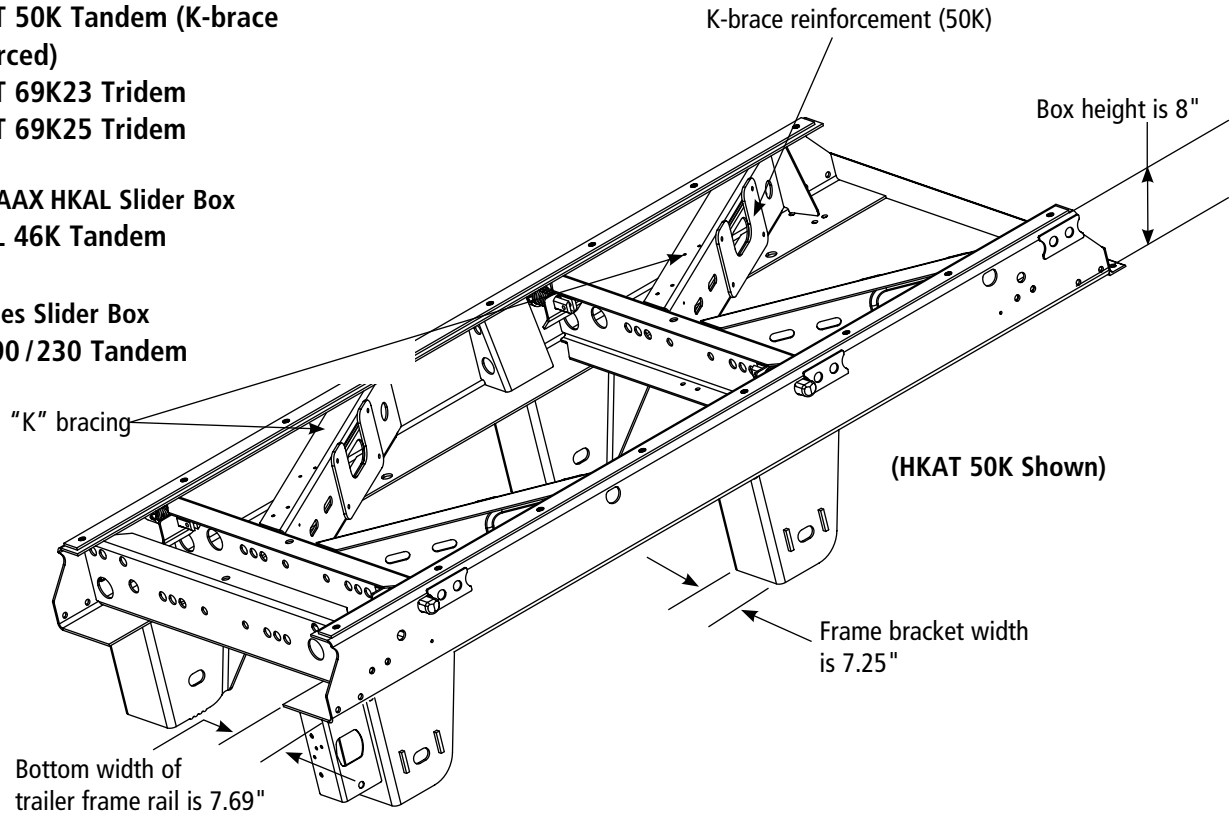

VANTRAAX HKARL Slider Box
- **HKARL 46K Ramp Ready Tandem**

HTHKR Slider Box
- **HTHKR 200U Ramp Ready Tandem**

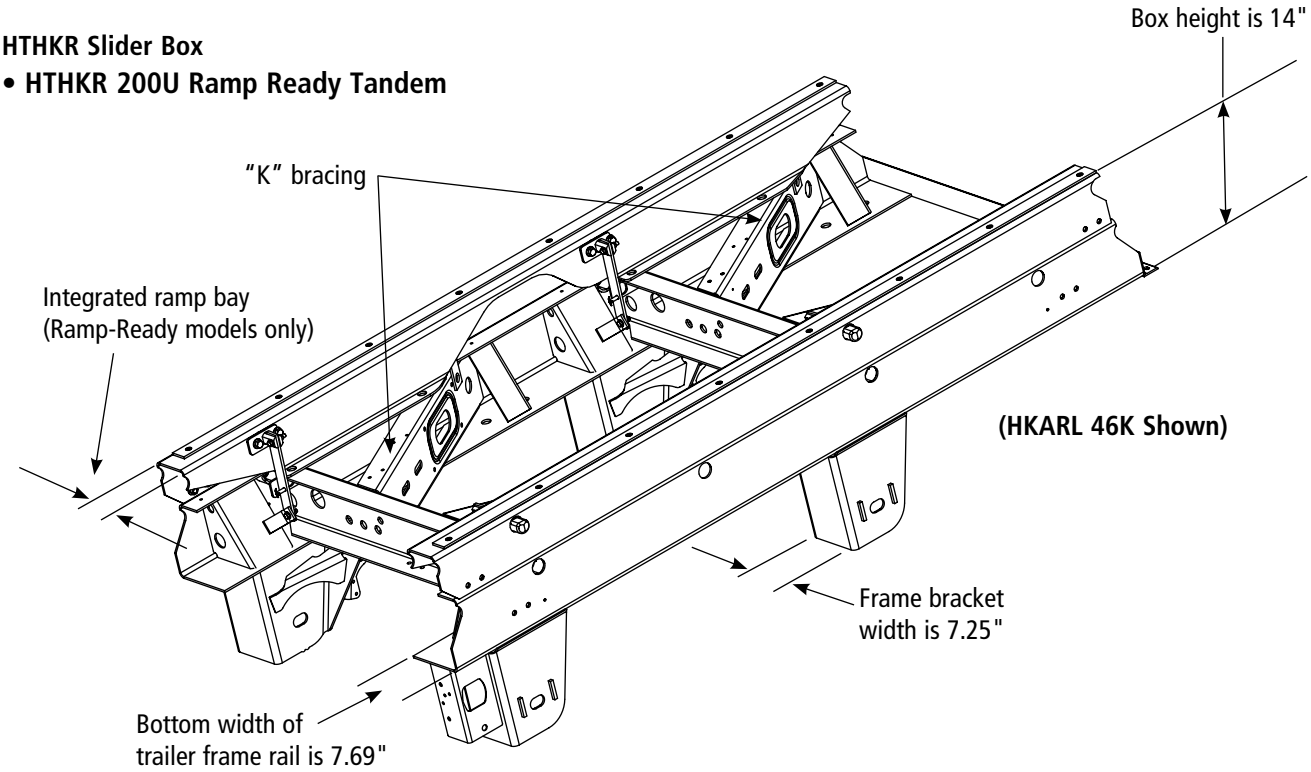

SLIDER SUSPENSIONS — PLATFORM APPLICATIONS

Hendrickson platform slider boxes feature a "Z-rail" style box that is designed to fit between the trailer I-beams with the locking pins engaging through the holes in the web of the beams. Refer to the illustrations below to determine if you have a top-mount or low-ride model.

INTRAAX® SP AAZL Slider Box

- **AAZL 23K Single**
- **AAZL 46K Tandem**

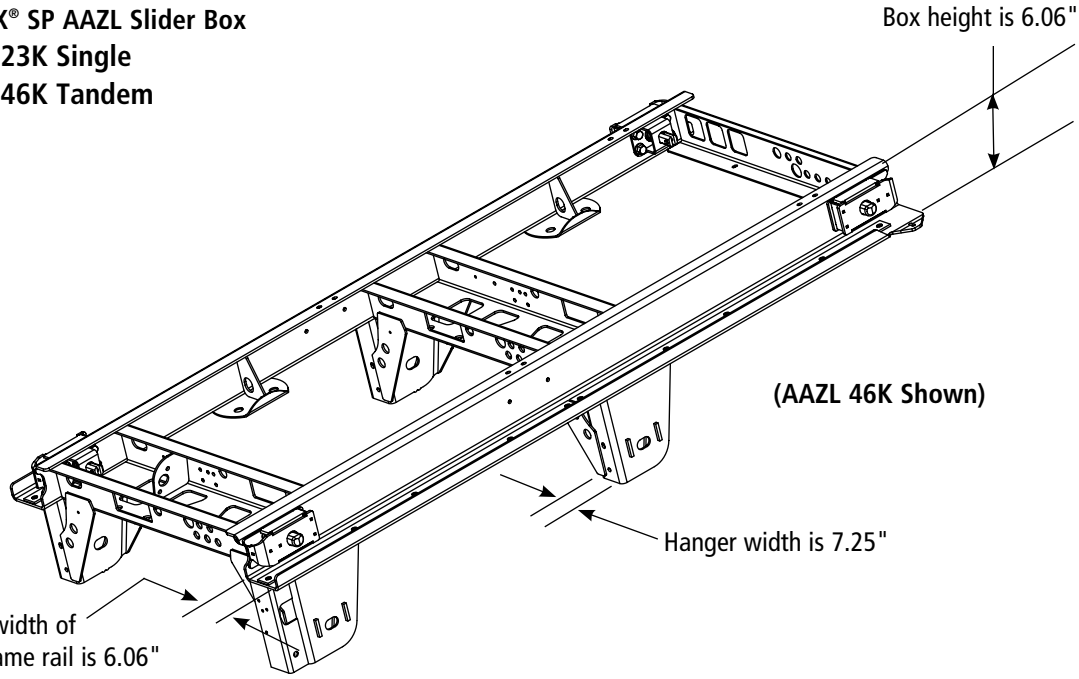

INTRAAX SP AAZNT Slider Box

- **AAZNT 23K Single**
- **AAZNT 46K Tandem**
- **AAZNT 69K23 Tridem**

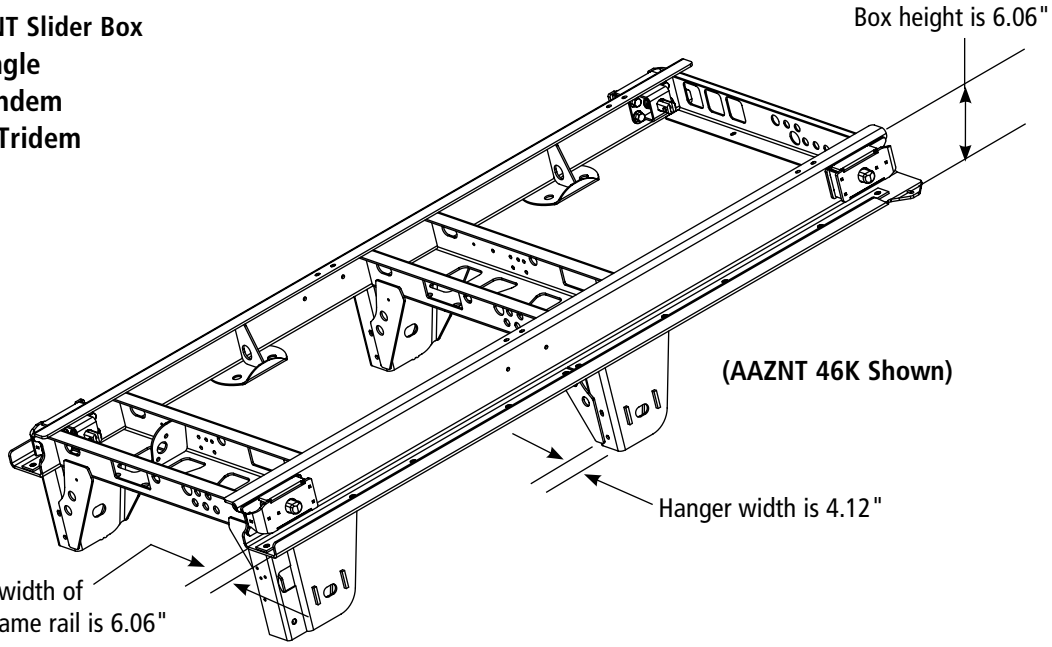

PRIMARY SUSPENSIONS — VOCATIONAL APPLICATIONS

TOP-MOUNT SUSPENSIONS

Top-mount suspensions are those with the beam assembly on top of the axle. The illustrations show the distinguishing characteristics of the various Hendrickson top-mount suspensions. In order to determine the suspension model, find the illustration with the same identifying characteristics.

HT® SERIES Top-Mount

- **HT190T**
- **HT230T**

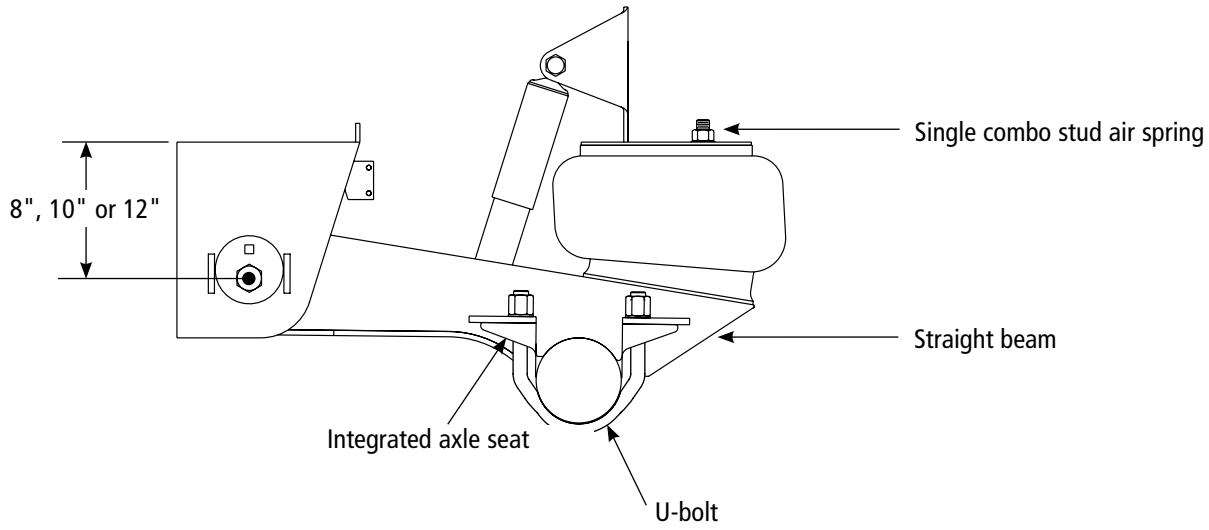

HT SERIES Top-Mount

- **HT250T**

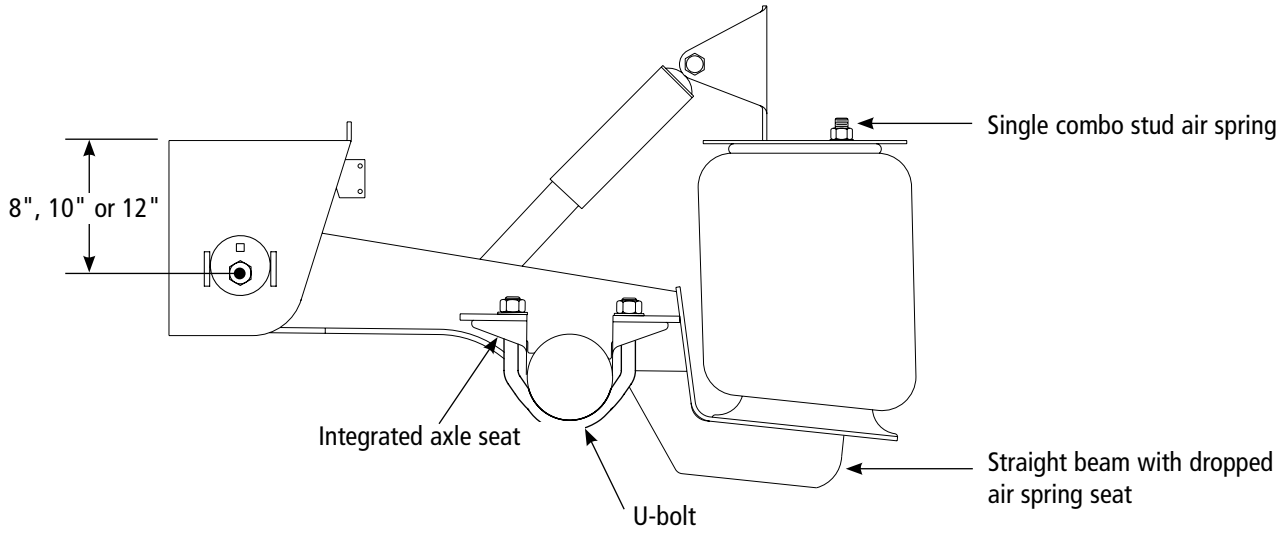

HT® SERIES Top-Mount

- **HT300T**

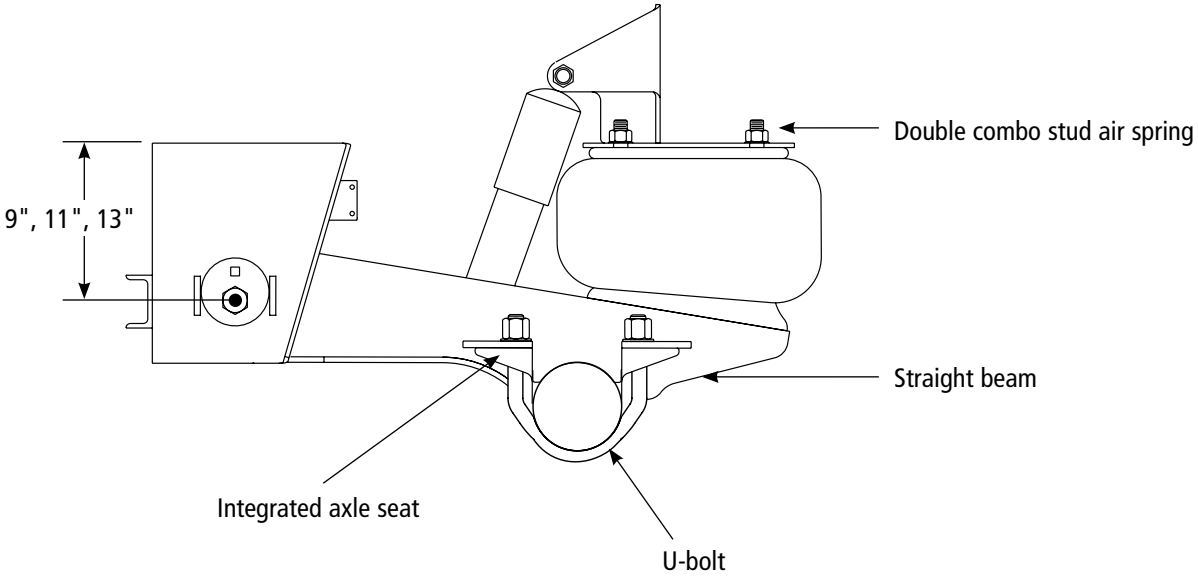

T Series Top-Mount (Legacy)

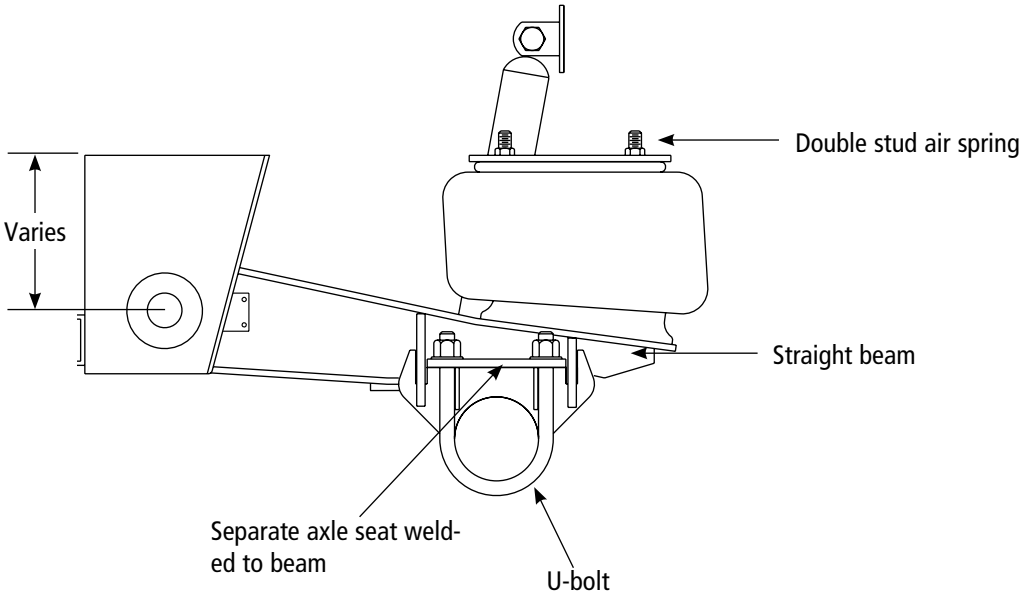

UNDERSLUNG SUSPENSIONS

Underslung suspensions are those with the beam assembly under the axle. The illustrations show the distinguishing characteristics of the various Hendrickson underslung suspensions. In order to determine the suspension model, find the illustration with the same identifying characteristics.

HT® SERIES Underslung

- **HT190U**

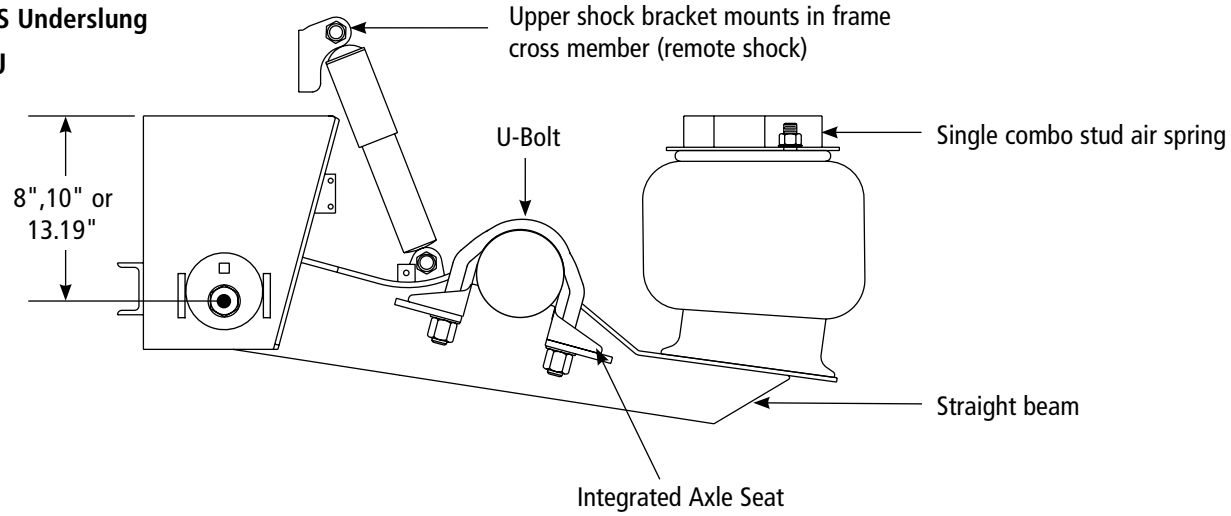

HT SERIES UNDERSLUNG

- **HT200UAM**

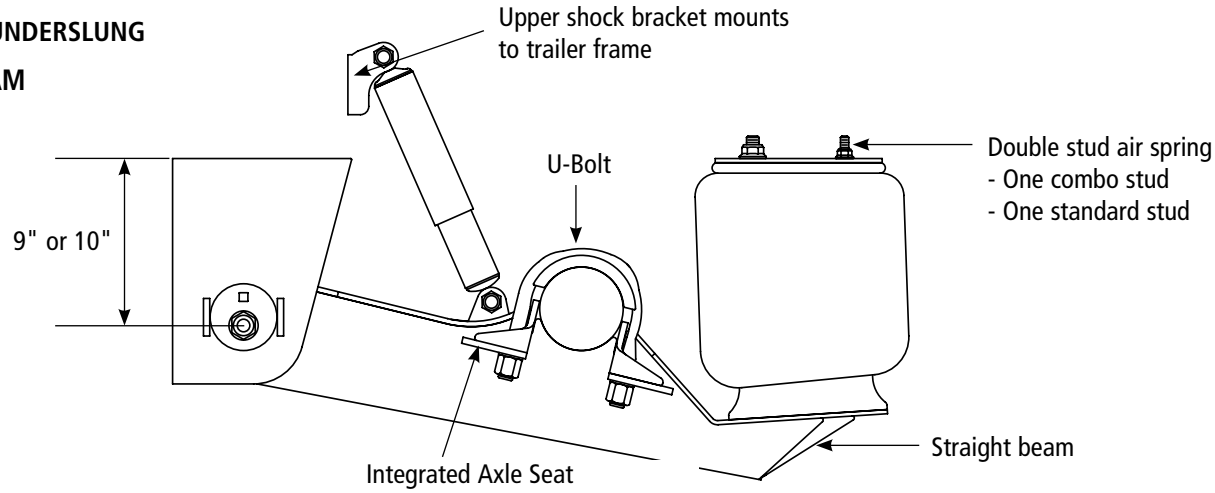

HT SERIES Underslung

- **HT250US**
- **HT300US**

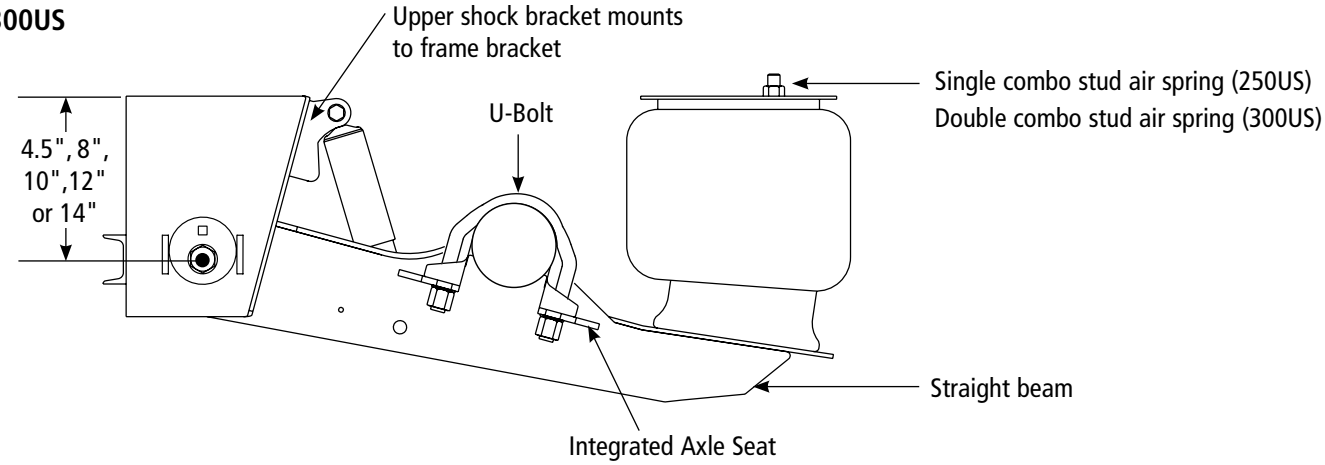

HT® SERIES Underslung

- **HT250U**

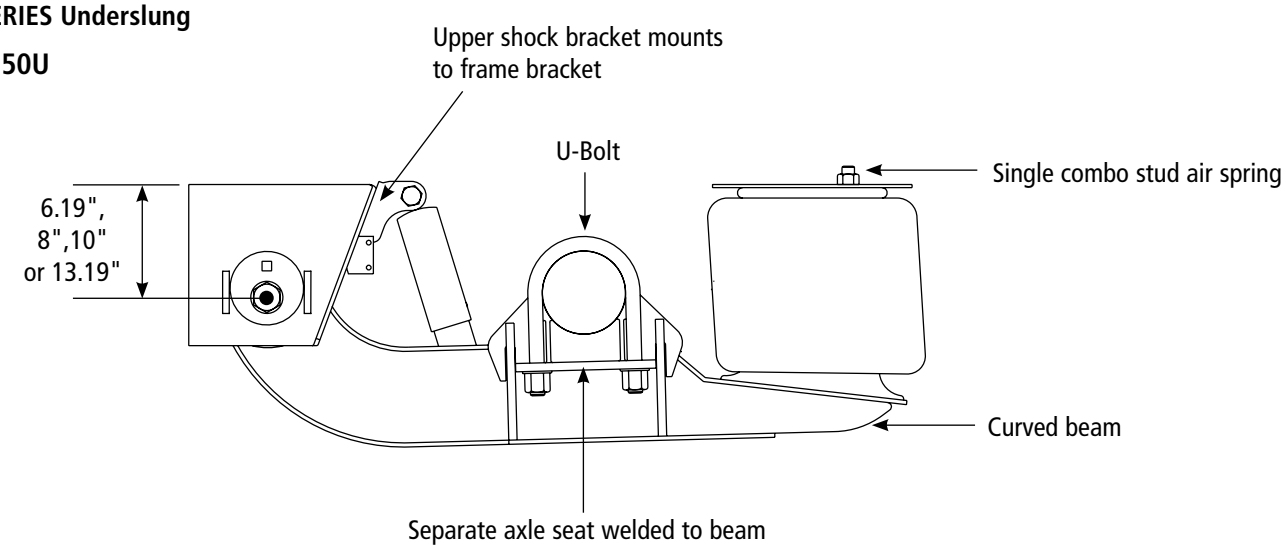

HT SERIES Underslung

- **HT300U**

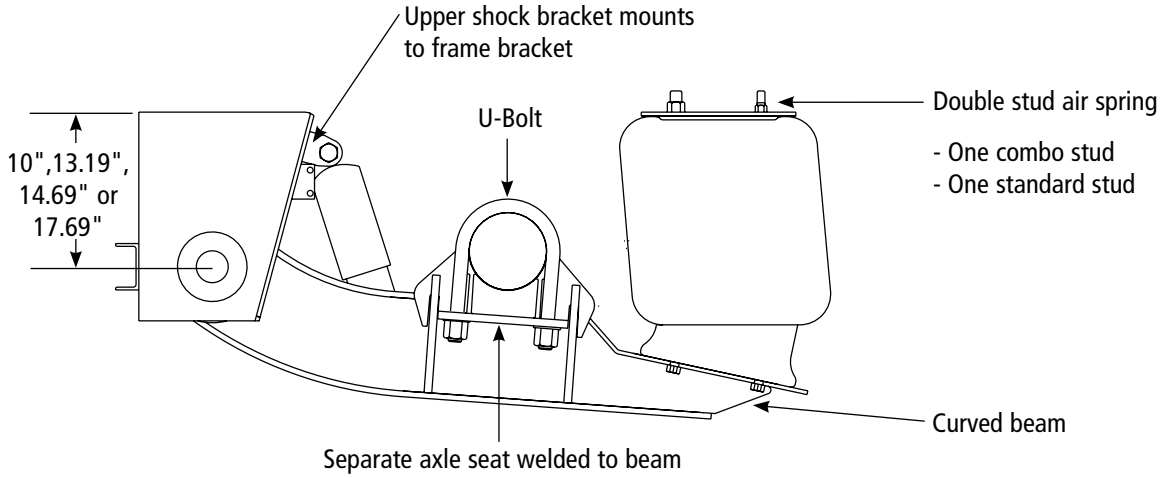

T Series Underslung (Legacy)

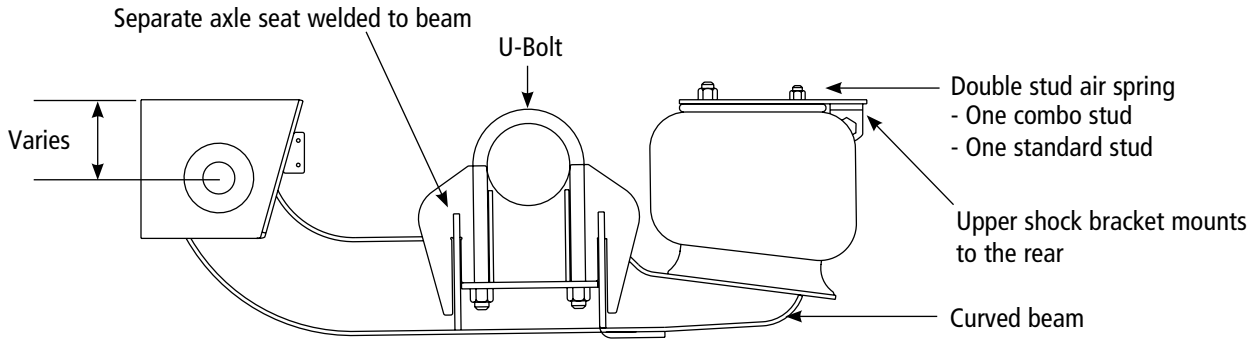

Y-BEAM SUSPENSIONS

Y-Beam suspensions are those with the beam assembly under the axle and the suspension pivot bushing tubes integrated into the trailer frame. The illustrations show the distinguishing characteristics of the various Hendrickson Y-beam suspensions. In order to determine the suspension model, find the illustration with the same identifying characteristics.

HT® SERIES Y-BEAM

- **HT250YS**

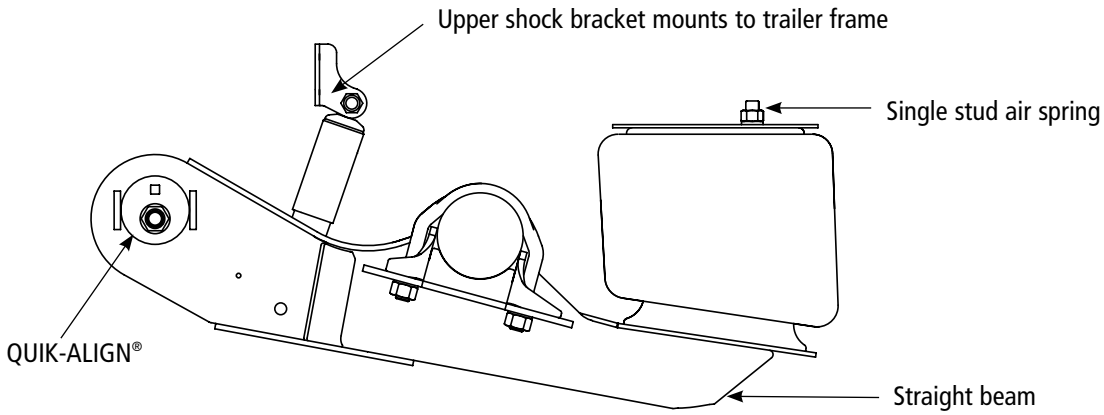

HT SERIES Y-BEAM

- **HT250YB**
- **HT300YB**

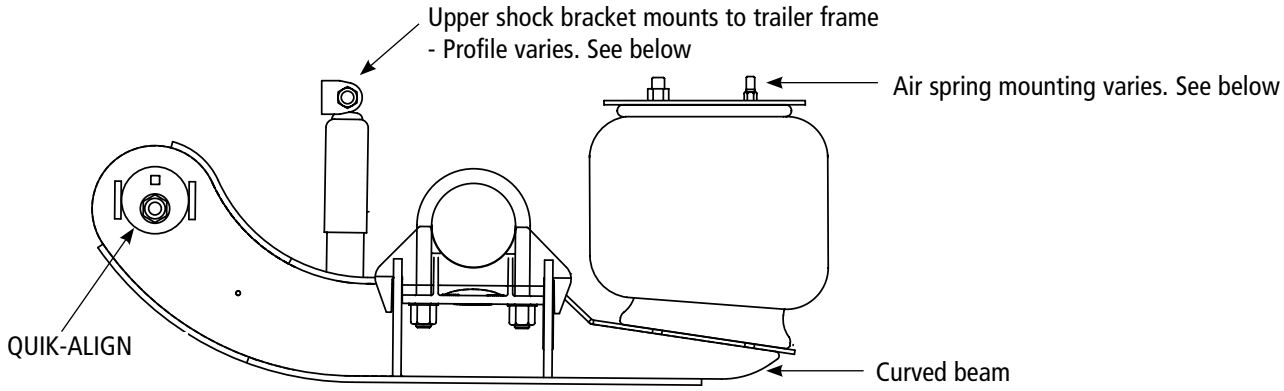

HT250YB

- **Paired with HT250UB**
- **Single combo stud air spring**

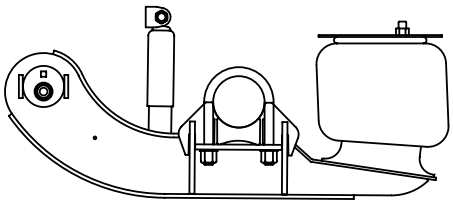

HT300YB

- **Paired with HT300UB**
- **Double air spring stud**
  - **One combo stud**
  - **One standard stud**

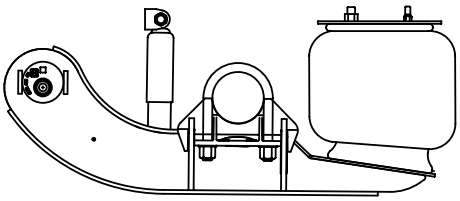

HT300YB

- **Paired with HT300US**
- **Dual combo stud air spring**

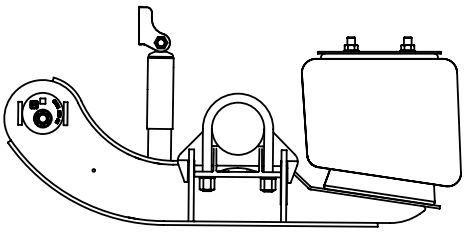

PRIMARY SUSPENSIONS — VOCATIONAL APPLICATIONS (INTRAAX®)

Hendrickson's INTRAAX® suspensions have an integrated axle and beam assembly. The illustrations show the distinguishing characteristics of the various models. In order to determine the suspension model, find the illustration with the same identifying characteristics.

INTRAAX Top-Mount
- **AAT 23K / 25K / 30K**

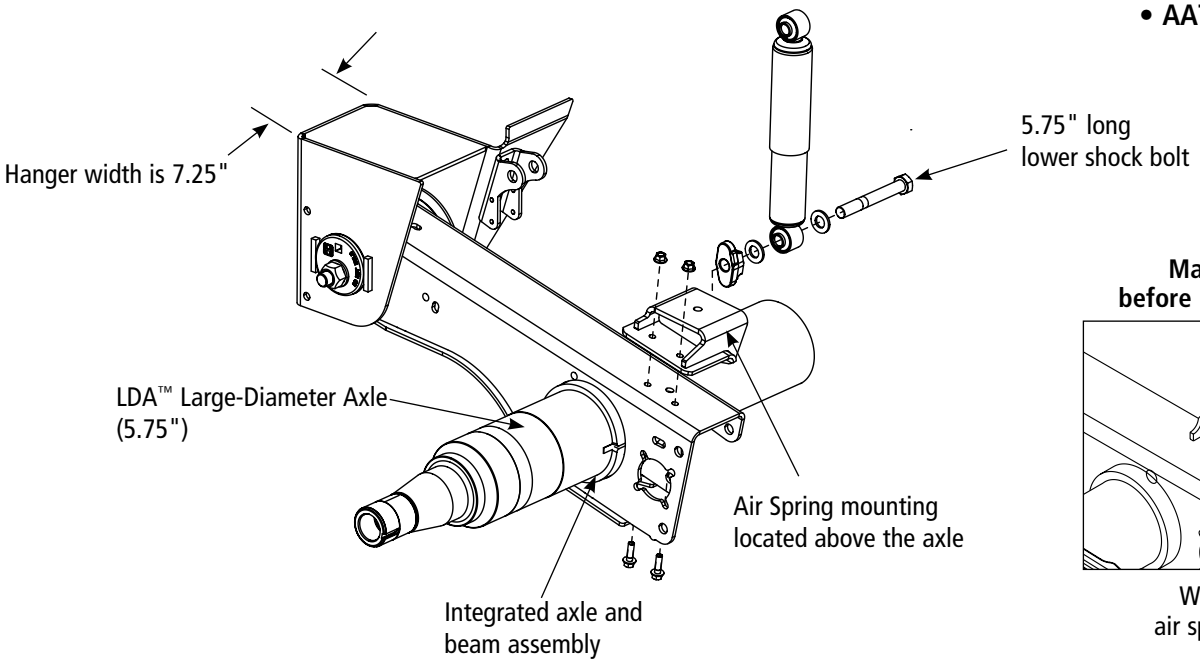

Manufactured before December 2010

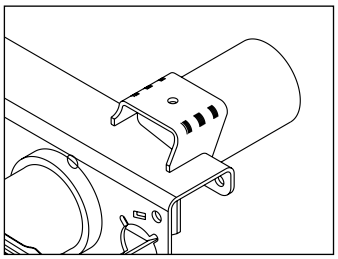

With weld-on
air spring pedestal

INTRAAX Top-Mount
- **AANT 23K**

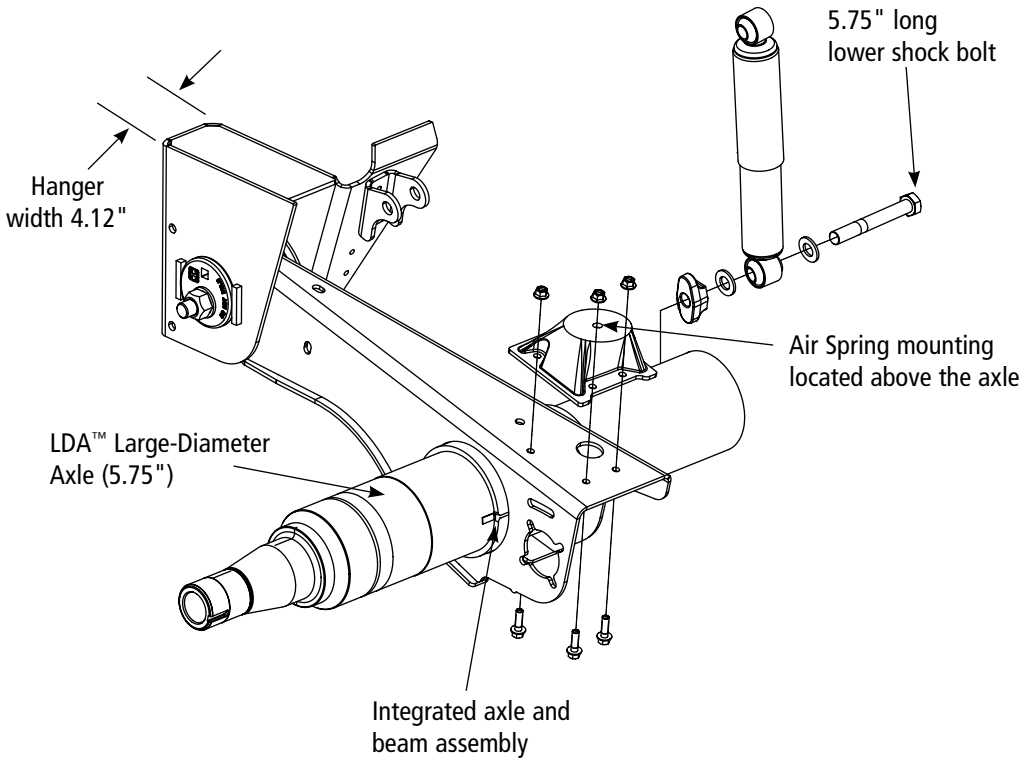

Manufactured late August 2002 through 2008

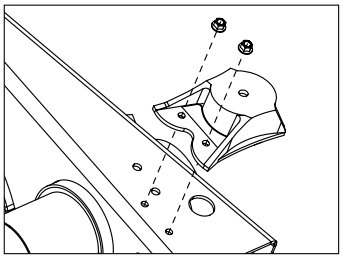

With cast, bolt-on
air spring pedestal

Manufactured 2001 through 2002

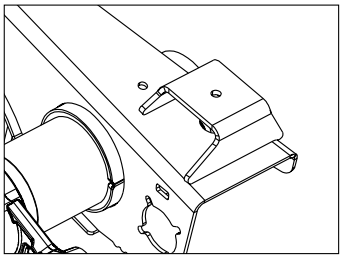

With 2-inch, weld-on
air spring pedestal

INTRAAX® Extreme-Duty Top-Mount

- **AAEDT 30K**

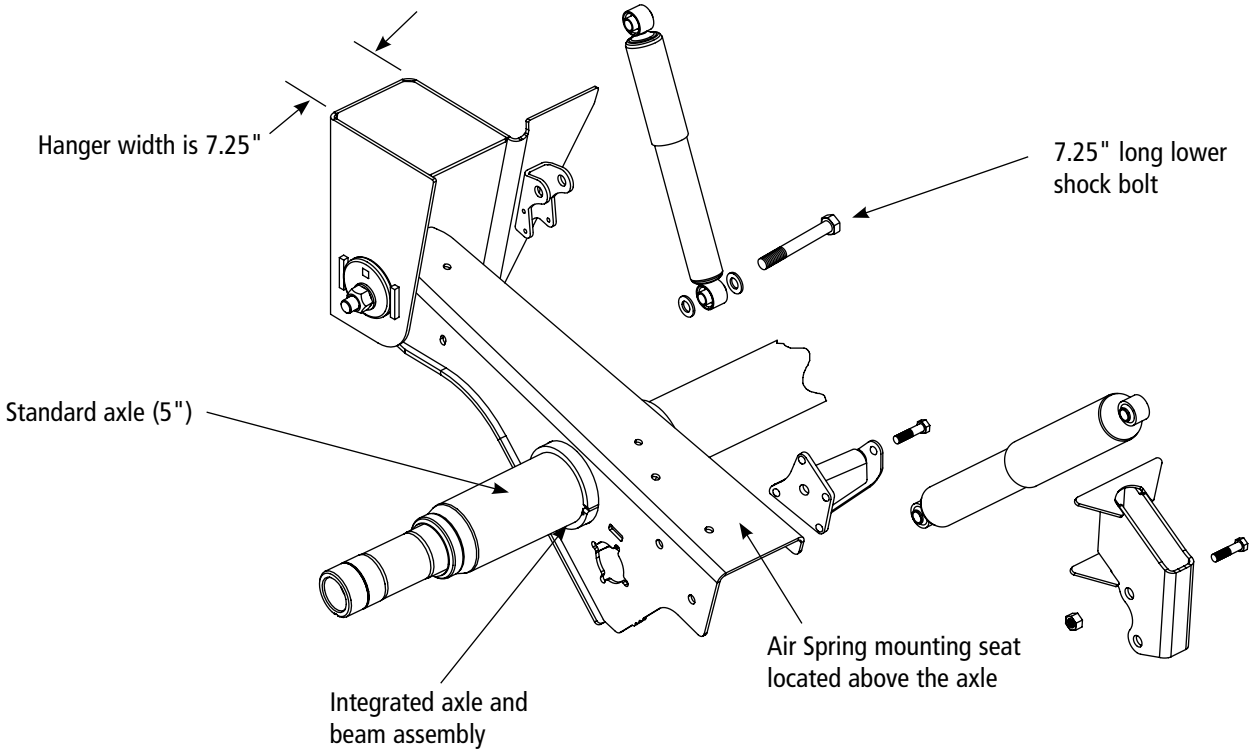

INTRAAX Extreme Duty Low-Ride / Liftable

- **AAEDL 30K**

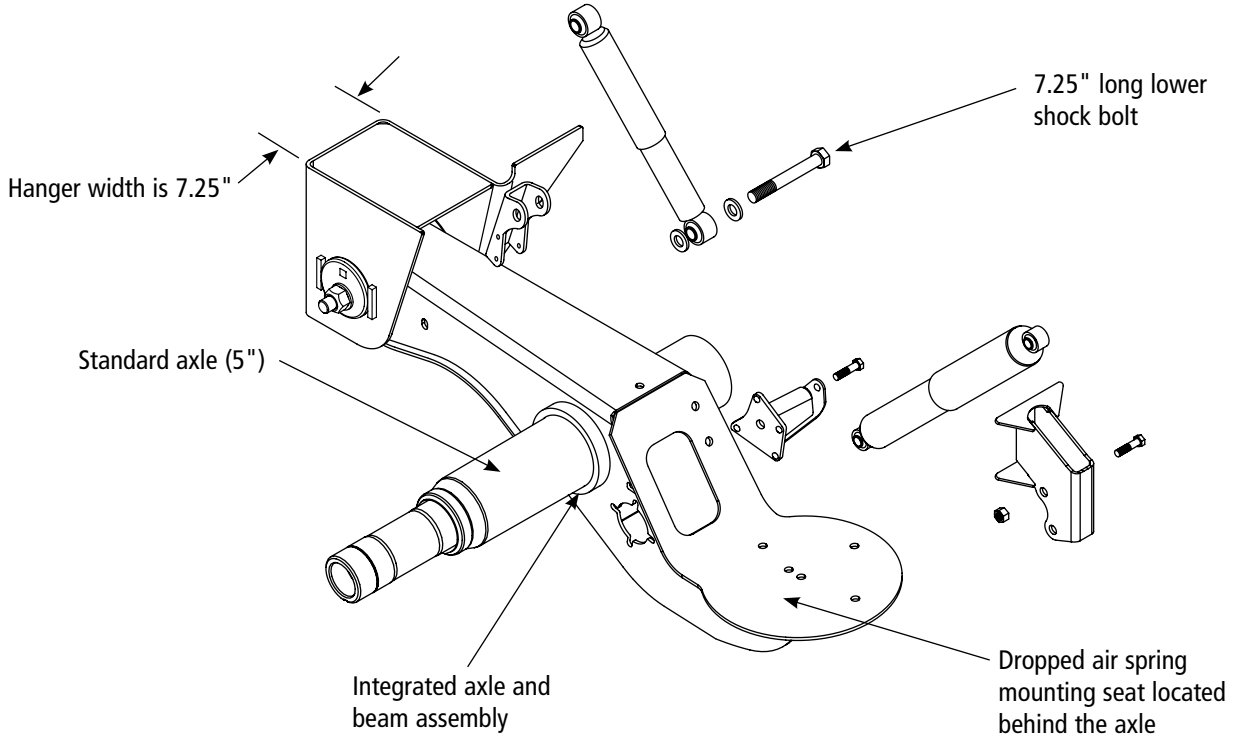

INTRAAX® Low-Ride / Liftable

- **AAL 23K / 25K / 30K**

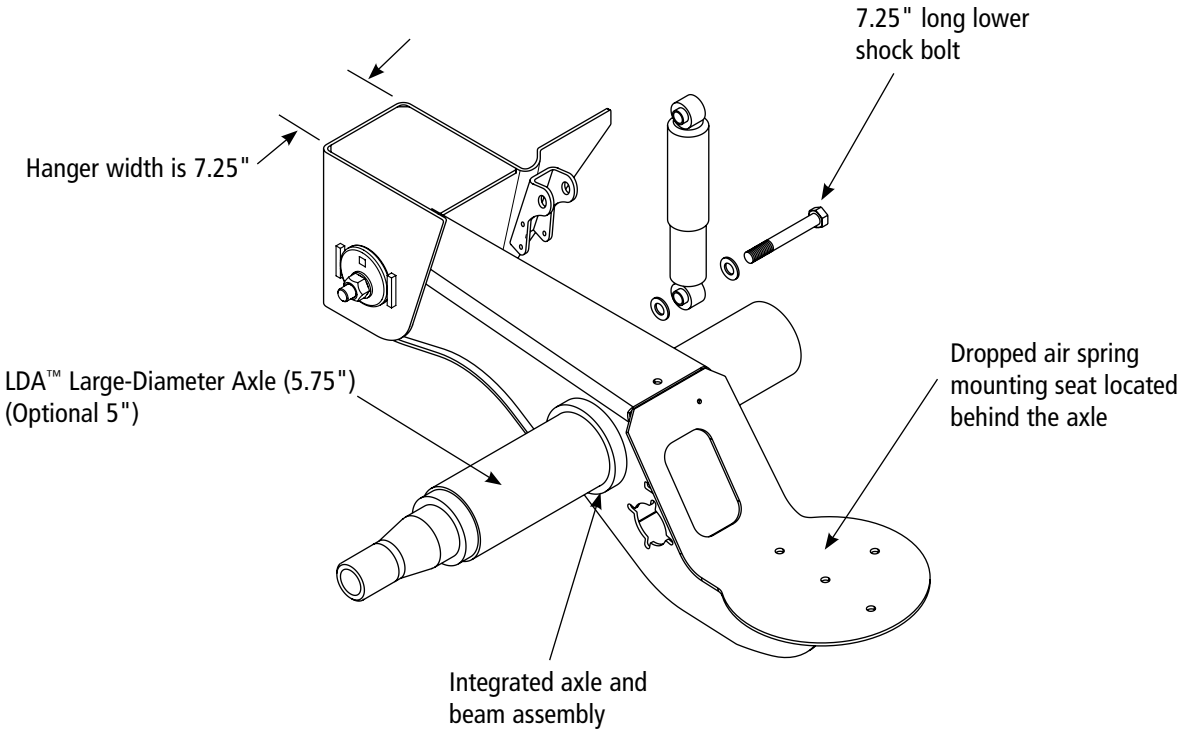

INTRAAX Low-Ride

- **AANLS 20K**
- **AANL 23K**

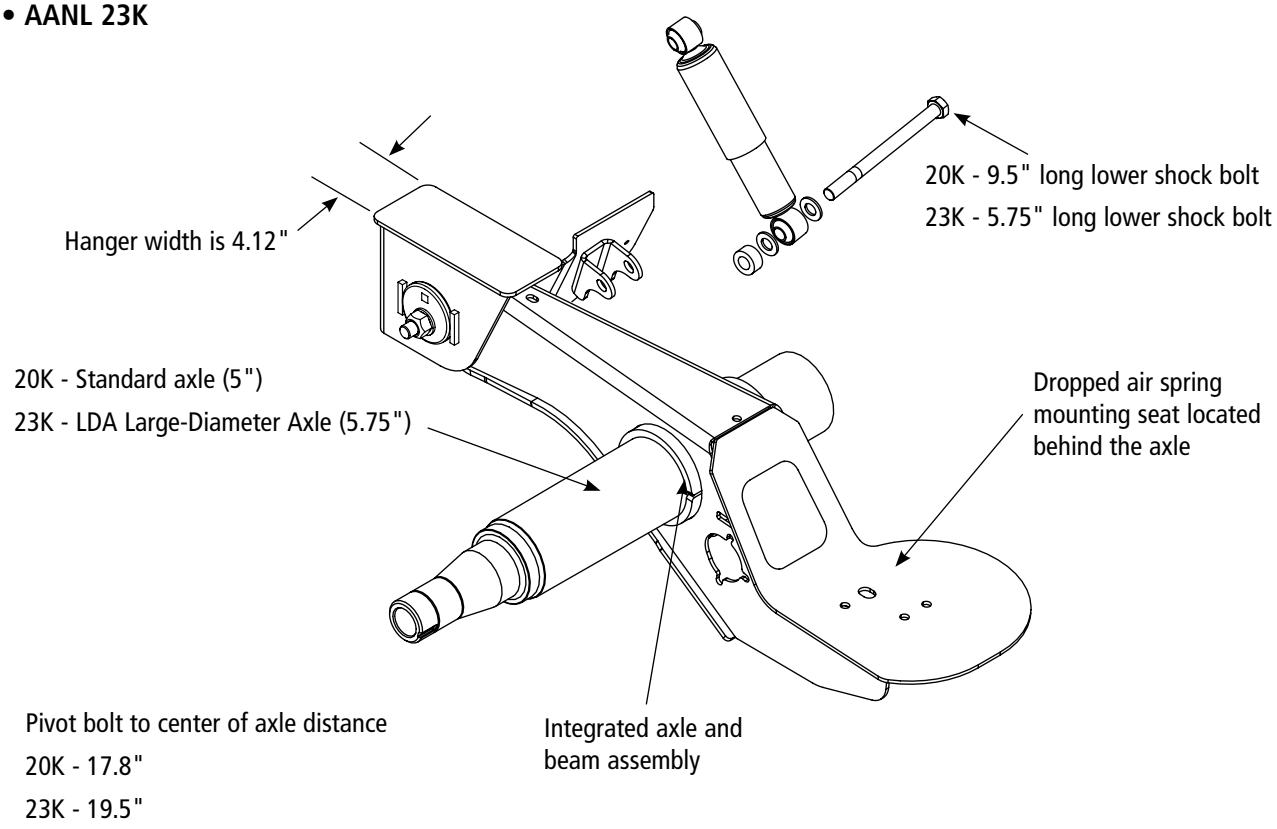

SELF-STEER SUSPENSION — VOCATIONAL APPLICATIONS (CONNEX® ST)

Hendrickson's CONNEX ST trailer self-steer suspensions combine the proven HT250T with its innovative steer axle technology. The illustration shows the distinguishing characteristics of the CONNEX ST model.

CONNEX ST Liftable

- **CXSL 25K**

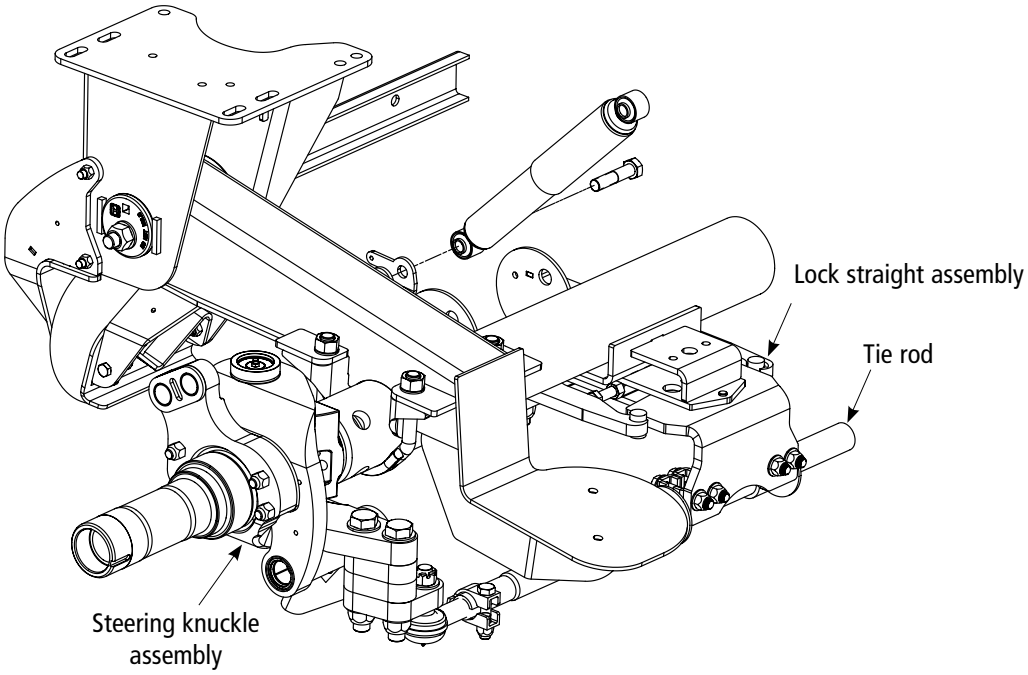

PRIMARY SUSPENSION — VOCATIONAL APPLICATIONS (CONNEX®)

Hendrickson's CONNEX® unitized trailer suspension system combines the proven HT® SERIES suspension components with TRLAXLE® non-integrated axle. The illustration shows the distinguishing characteristics of the CONNEX model.

CONNEX Underslung

- **CXU 23K**
- **CXU 25K**

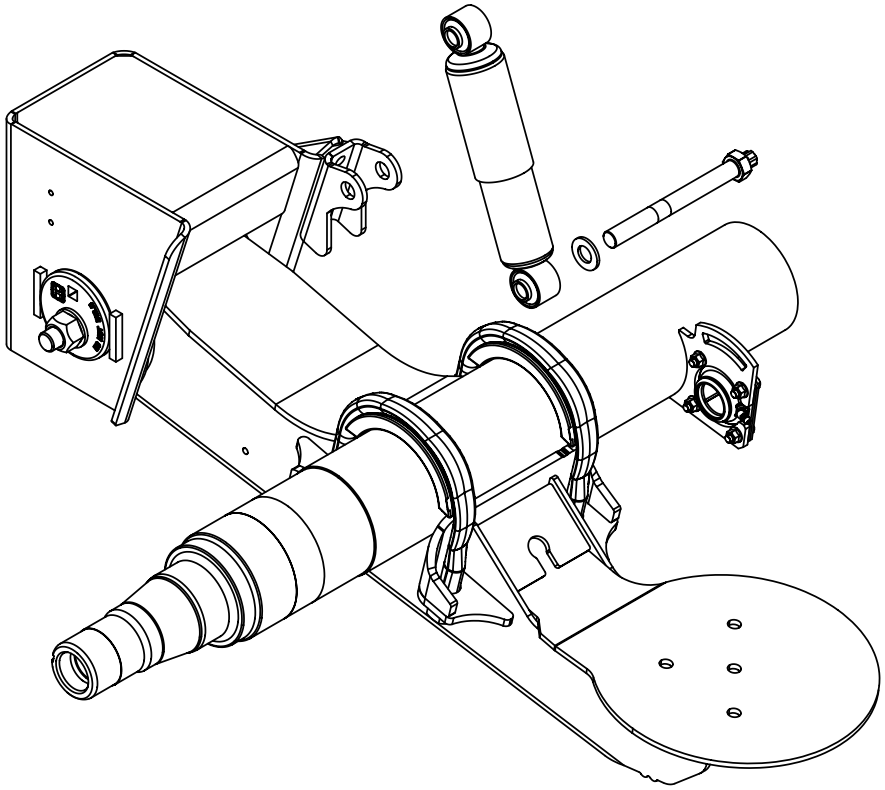

CONNEX Y-Beam

- **CXY 23K**
- **CXY 25K**

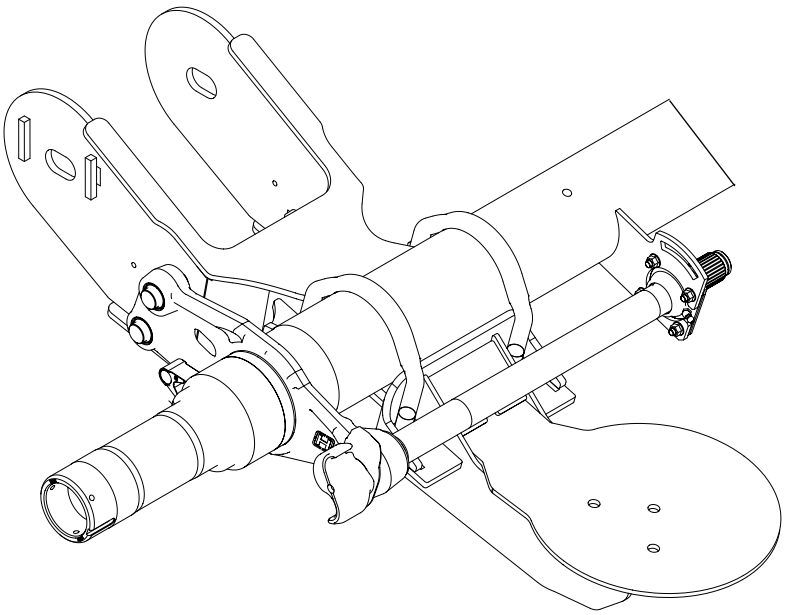

NOTES

Primary Fixed Suspension System

INTRAAX® AAT Top-Mount

L405 - Suspension Components 58

L1266 - Frame Brackets 275

L1287 - Shocks 294

L1182 - Vehicle Controls 302

L878 - Tire Pressure Control System 319

L1104 - Drum Brake Components 329

L949 - READY-TO-ROLL® Wheel-End Packages
& Air Disc Brake Components 337

INTRAAX® Suspension Components

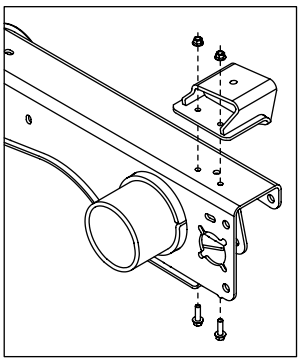

Pedestal Components Detail
(Call Hendrickson for assistance)

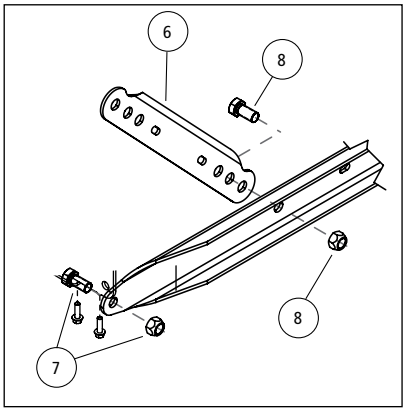

Bolt-on C-channel

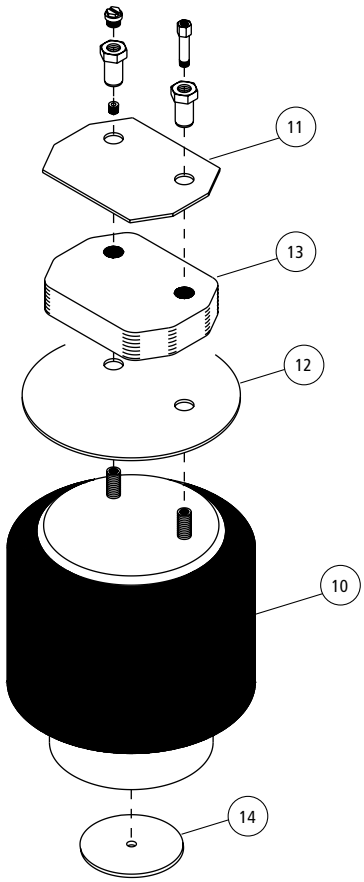

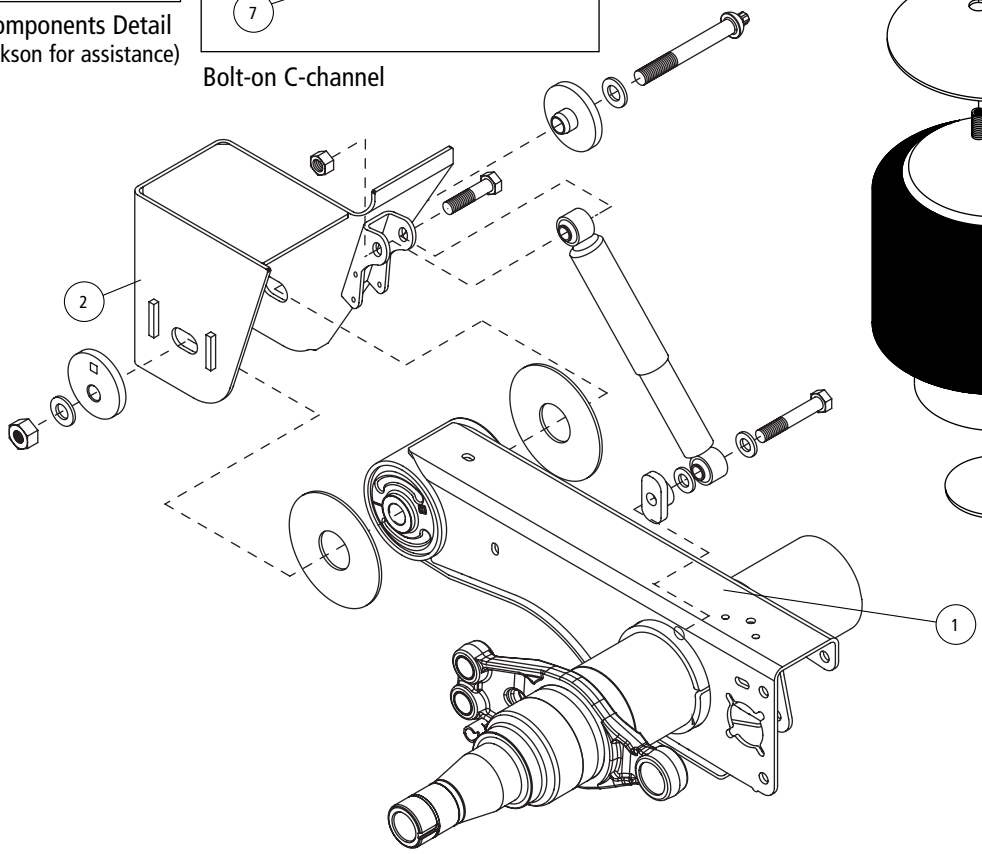

Five inch axle, weld-on pedestal (obsolete)

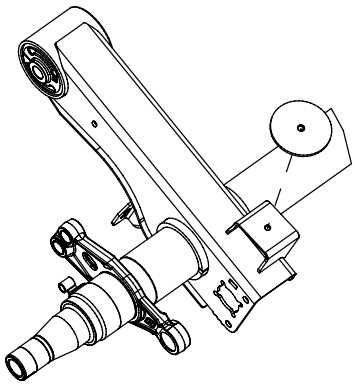

LDA™ Axle, cast pedestal

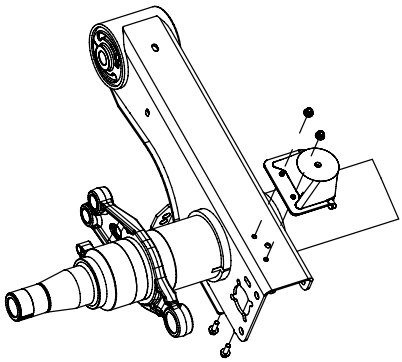

LDA Axle, steel weldment

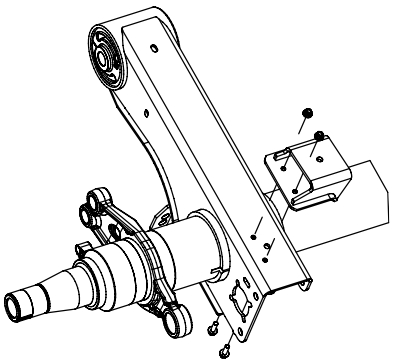

ITEM	DESCRIPTION	PART NO.	PER AXLE	NOTE
1	**AXLE / BEAM WELDMENT**	HTRAAX.XX		Contact Hendrickson for assistance
2	**FRAME BRACKET**[1]			See L1266 Frame Bracket Parts List
3	**FRAME BRACKET GUSSET** (Not Shown)	S-27330	2	13.5" to 19" ride heights
4	**FRAME BRACKET BRACE** (Not Shown)	B-2347-7	1	16" – 17" ride heights
5	**BOLT-ON C-CHANNEL KIT**[2]			
	71.5" track	S-31901-3C	1	Standard black primer; includes c-channel, 2 struts and strut bolt kit
	77.5" track	S-31901-1C	1	Standard black primer; includes c-channel, 2 struts and strut bolt kit
6	**STRUT**[2]	B-30591	2	
7	**C-CHANNEL BOLT KIT**	S-29822	1	Includes 2 screws and 2 prevailing torque nuts
8	**STRUT BOLT KIT**	S-30720	1	Includes 6 screws and 6 prevailing torque nuts
9	**WELD-ON C-CHANNEL** (Not Shown)			
	71.5" - 77.5" Tracks	A-1631-19	1	13.5" to 19" ride heights
	83.5" - 85" Tracks	A-1621-35	1	13.5" to 19" ride heights
10	**AIR SPRING**			
	AAT 23K models	S-21800	2	13.5" to 19" ride heights
	AAT 25K models	S-20901	2	13.5" to 19" ride heights
	AAT 30K models	S-25873	2	13.5" to 19" ride heights
	ZMD® TECHNOLOGY (Not Shown)			See page 6
11	**AIR SPRING MOUNTING PLATE**			
	Weld-on	S-20905	2	12" – 19" ride heights; standard air spring mounting plate
	Bolt-on[3]	B-21145	2	13.5" – 19" ride heights; standard air spring mounting plate
		B-21715	2	13.5" – 19" ride heights; pattern 1 air spring mounting plate
		B-22390	2	13.5" – 19" ride heights; pattern 2 air spring mounting plate
		B-27264	2	13.5" – 19" ride heights; pattern 3 air spring mounting plate
12	**AIR SPRING FLEX PLATE (30K MODELS ONLY) (5" axle)**	B-23294		Not required for units with LDA™
13	**AIR SPRING SPACER (Plastic)**[4]			
	5" axle			Flex Plate required
	15" ride height	S-22510-1	2	$1^1/_8$" thick spacer
	16" ride height	S-22510-2	2	$1^7/_8$" thick spacer
	17" ride height	S-22510-3	2	$3^1/_8$" thick spacer
	LDA Large-Diameter Axle			
	16" and 18" ride height	S-22510-4	2	¾" Thick spacer
	19" ride height	S-22510-2	2	$1^7/_8$" Thick spacer
14	**AIR SPRING BOTTOM DISK (5" axle)**	S-21786		
15	**AIR SPRING MOUNTING KITS**[5,6]			One per air spring; Includes air fittings, hex flange nuts, plugs and extension nuts
	5" and LDA Large-Diameter Axle			
	13.5", 14", 15" ride heights	S-22619/2	2	
	16" and 18" ride heights	S-22630/2	2	
	17" ride height	S-22619/2	2	
	19" ride height	S-22631/2	2	

1. Options exist based on frame attachment, frame bracket style, bolt hole pattern and connection. Contact Hendrickson for assistance or refer to L1266 Frame Bracket parts list.
2. Struts are only optional for bolt-on frame brackets. Other options exist for galvanized or different track widths.
3. Please see INTRAAX® Bolt-on Mounting Drawing, D-26651, for assistance in pattern selection. This drawing can be found in the literature section of the Hendrickson website (www.hendrickson-intl.com).
4. Standard options listed. Other options exist. Please contact Hendrickson for assistance.
5. Picture may not resemble all models.
6. Kits listed are for units with standard travel, standard air spring hardware and standard air spring mounting plate. Components may vary for limited rebound, limited jounce, thick frame or steel spacer models.

INTRAAX® Suspension Components

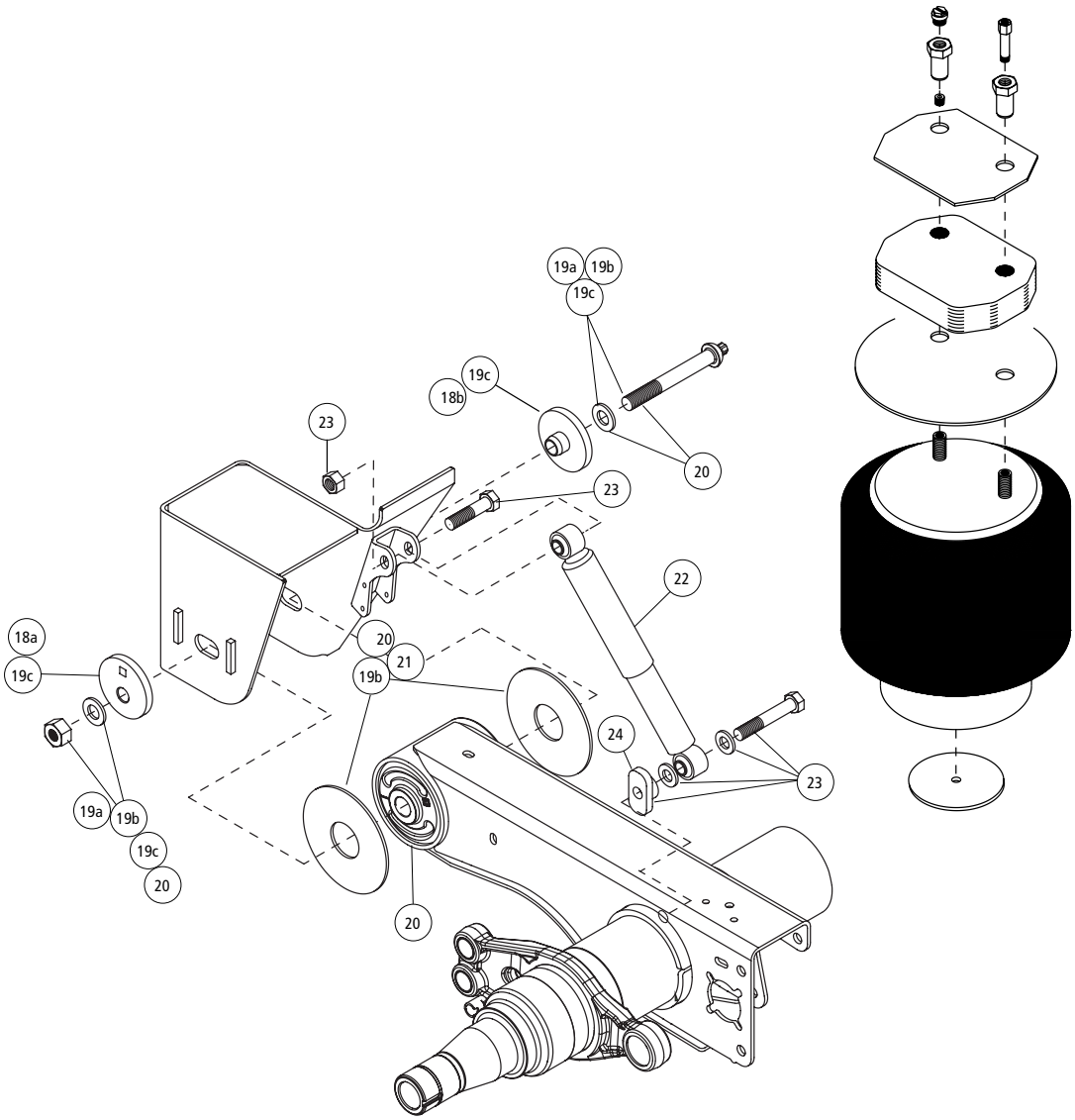

Pedestal Component Details (call Hendrickson for assistance)

Five inch axle, weld-on pedestal (obsolete)

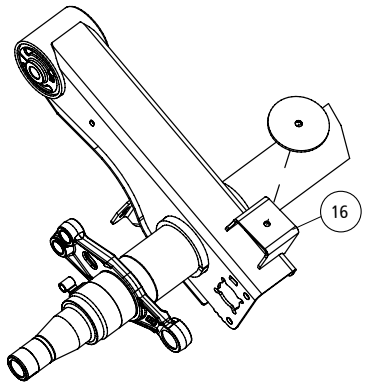

LDA™ Axle, cast pedestal

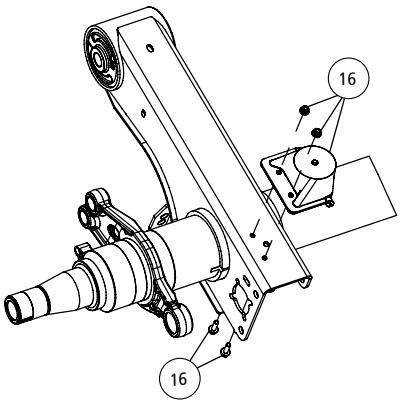

LDA Axle, steel weldment

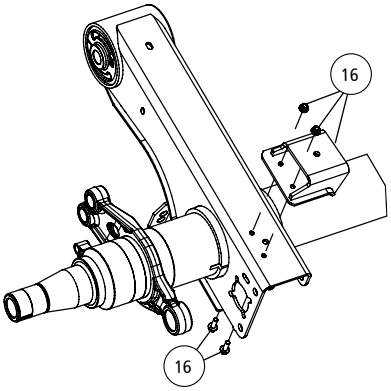

ITEM	DESCRIPTION	PART NO.	PER AXLE	NOTE
16	**AIR SPRING PEDESTAL KITS**			Includes 2 pedestals, 4 nuts, and 4 screws
	LDA™ and Five Inch Axle: Standard Travel (or) Limited Rebound Travel			
	13.5" – 14" ride heights	S-32164-1	2	Kit uses bolt-on cast pedestals D-36230-1L/1R
	15" – 16" ride heights	S-32164-2	2	Kit uses bolt-on steel pedestals D-30827-2L/2R
	17" – 19" ride heights	S-32164-3	2	Kit uses bolt-on steel pedestals D-30827-3L/3R
	LDA and Five Inch Axle: Limited Jounce Travel			Not available on 13.5", 18", 19" ride heights
	14" – 15" ride heights	S-32164-2	2	Kit uses bolt-on steel pedestals D-30827-2L/2R
	16" – 17" ride heights	S-32164-3	2	Kit uses bolt-on steel pedestals D-30827-3L/3R
	5" Axle (Weld-On) Pedestal			
	13.5" – 19" ride heights	S-32164-1	2	Use bolt-on S-32164-1. Follow directions on B-32164 drawing. Weld-on option obsolete. Replace with bolt-on number listed above.
17	**AIR SPRING SPACER ASSEMBLY** (Not Shown)			Contact Hendrickson for assistance
18	**ALIGNMENT COLLARS**			
	18a Eccentric	S-20925	2	Pivot hole is offset from the center of collar
	18b Concentric	S-20924	2	Pivot hole is in center of collar
19	**QUIK-ALIGN® PIVOT BOLT KIT**[7]			
	19a Pivot bolt kit	S-24679	2	Includes 10" shear-type bolt, nut, and washers
	19b Pivot bolt kit w/ bushing tube spacers	S-26369	2	Includes 10" shear-type bolt, nut, washers, and bushing tube spacers
	19c Pivot bolt kit w/ alignment collars	S-24680	2	Includes 10" shear-type bolt, nut, washers, and alignment collars
20	**TRI-FUNCTIONAL® BUSHING KIT**[5,7,8]			
	Standard	S-24691	2	Includes bushing, pivot bolt kit (Item 20), bushing tube spacer and lube
	Pivot bushing kit w/alignment collars	S-28654	1	Includes 2 bushings, 2 pivot bolt kits, bushing tube spacers and lube
21	**BUSHING TUBE SPACERS**	S-21099	4	4 required per axle; Standard
22	**FRONT SHOCK ABSORBER**			See L1287 Shock Parts List
23	**SHOCK ABSORBER BOLT KIT**			One 1 required per shock
	23K and 25K models shipped before 8/11/95	S-20896/2	2	
	23K and 25K models shipped after 8/11/95	S-24021	2	
	30K front mounted shock	S-24021	2	
	30K rear mounted shock	S-20031/2	2	
24	**SHOCK SPACER**	S-27196	2	

7. Best installed with Hendrickson's E-20 socket S-24536 (1-inch drive) or S-24303 (3/4-inch drive)
8. Bushing tool, S-21307 is required to correctly rebush the suspension.

ZMD® ZERO MAINTENANCE DAMPING® COMPONENTS – AAT 23K and AAT 25K only (Not Shown)

ITEM	DESCRIPTION	PART NO.	PER AXLE	NOTE
25	**ZMD® AIR SPRING**			14" - 19" ride heights only; Standard and Limited Rebound[9] travel
	AAT 23K			
	Plastic piston	S-39400	2	
	Steel piston	S-35510	2	
	AAT 25K			
	Plastic piston	S-39401	2	
26	**ZMD DOWNSTOP**			
	14" and 16" ride heights[10]	S-33669	2	
	15" - 17" ride heights	S-33669-3	2	
27	**ZMD DOWNSTOP BOLT KIT**	S-24049/2	2	Includes shear bolts, spacers, washers, hex bolt and hex nut
28	**ZMD RETROFIT KIT**			Includes 2 ZMD air springs, 2 down stop assemblies and hardware
	AAT 23K			
	14" ride height	S-39350-2	1	
	15" ride height	S-39350-4	1	
	16" ride height			
	Standard travel	S-39350-9	1	
	Limited rebound	S-39350-10	1	
	17" ride height	S-39350-4	1	
29	**AIR SPRING SPACER**	B-22510-1	2	16" ride height only

9. Available on 14" and 16" ride heights only.
10. Available only on Raised-Center Axle with Limited Rebound travel.

Primary Fixed Suspension System

INTRAAX® AANT Top-Mount

L1057 - Suspension Components 64

L1266 - Frame Brackets 275

L1287 - Shocks 294

L1182 - Vehicle Controls 302

L878 - Tire Pressure Control System 319

L1104 - Drum Brake Components 329

L949 - READY-TO-ROLL® Wheel-End Packages
& Air Disc Brake Components 337

SUSPENSION ASSEMBLIES

Frame Bracket Assembly

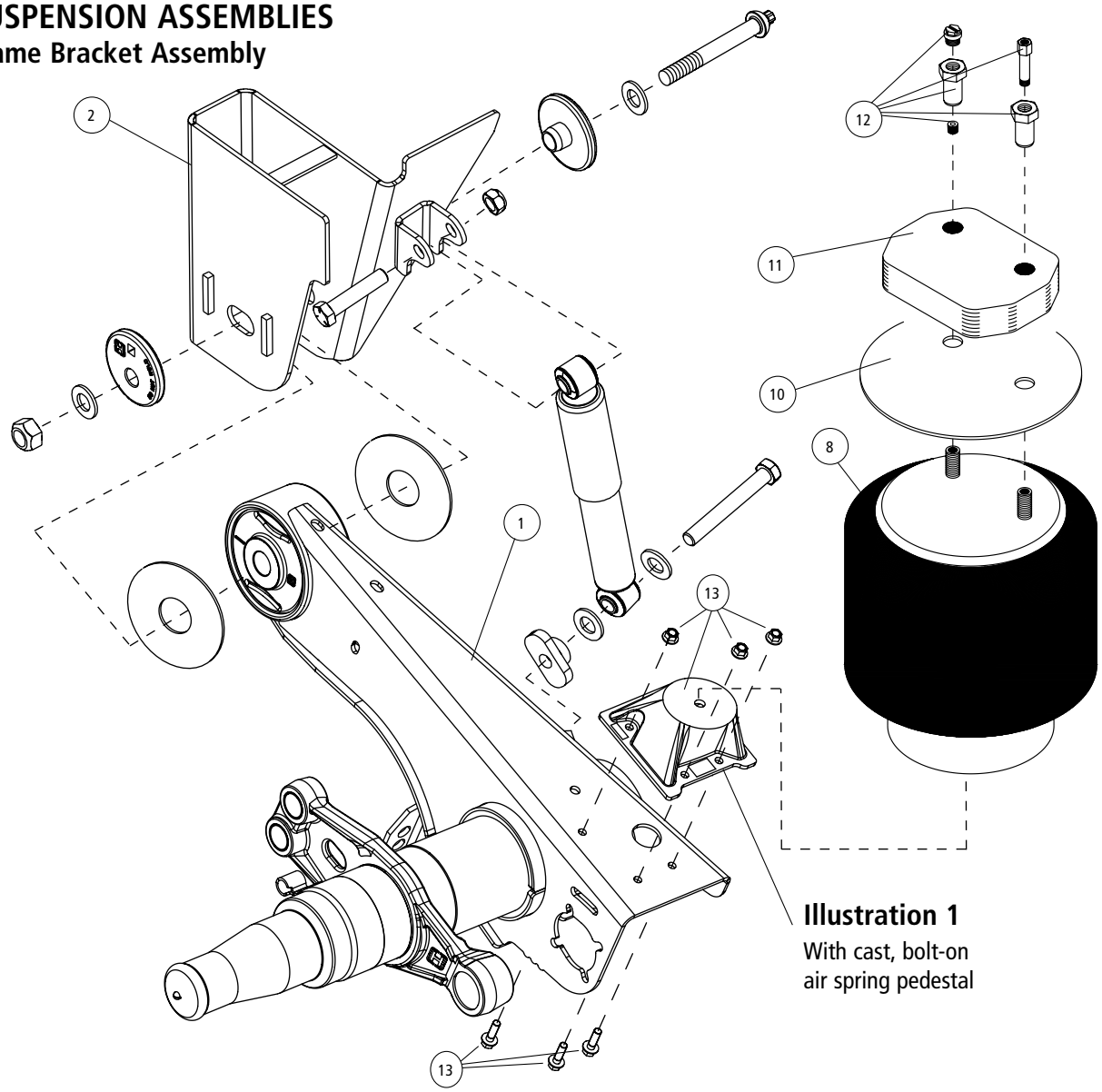

Illustration 1
With cast, bolt-on
air spring pedestal

Manufactured Late August 2002 Through 2008

Illustration 2
With cast, bolt-on
air spring pedestal

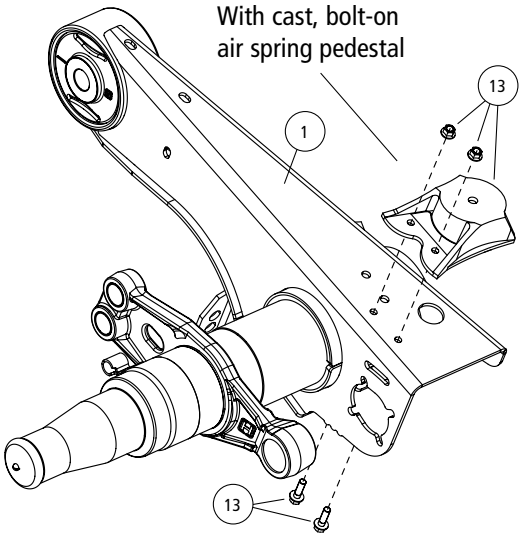

Manufactured 2001 Through 2002

Illustration 3
With 2-inch, weld-on
air spring pedestal

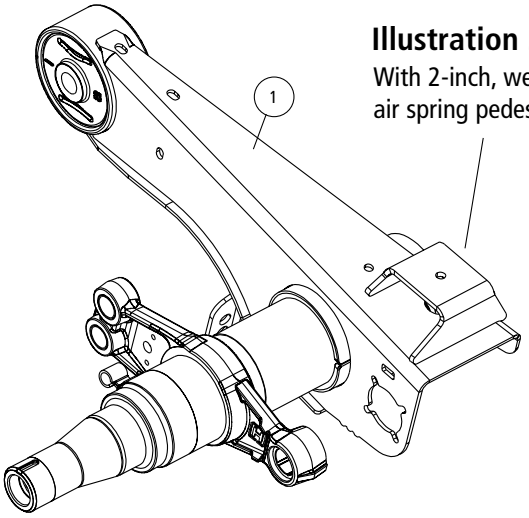

ITEM	DESCRIPTION	PART NO.	QTY.	NOTE
1	**AXLE / BEAM WELDMENT**	HTRAAX.XXX		Contact Hendrickson for assistance
2	**FRAME BRACKET**[1]			See L1266 Frame Bracket Parts List
3	**BOLT-ON C-CHANNEL KIT**[2] (Not Shown)			
	71.5" track	S-31901-1C		Standard / black primer; includes c-channel, 2 struts and strut bolt kit
	77.5" track	S-31901-2C		Standard / black primer; includes c-channel, 2 struts and strut bolt kit
4	**STRUT**[2] (Not Shown)	B-30591	2	
5	**C-CHANNEL BOLT KIT** (Not Shown)	S-29822	1	Includes 2 screws and 2 prevailing torque nuts
6	**STRUT BOLT KIT** (Not Shown)	S-30720-1	1	6 Screws and 6 prevailing torque nuts
7	**WELD-ON C-CHANNEL** (Not Shown)			
	71.5" track	C-27375-1	1	7" C-channel, wingless
	75.5" track	C-27375-2	1	7" C-channel, wingless
	77.5" track	C-27375	1	7" C-channel, wingless
8	**AIR SPRING**			
	Standard pressure	S-26773	2	12" to 13" ride heights
	Standard pressure	S-21800	2	13.5" to 19" ride heights
	Low pressure	S-20901	2	13.5" to 19" ride heights
9	**ZMD® TECHNOLOGY**			See page 6
10	**AIR SPRING MOUNTING PLATE**[3]			
	Weld-on	S-20905	2	12" - 19" ride heights; standard air spring mounting plate
	Bolt-on[3]	B-21145	2	13.5" - 19" ride heights; standard air spring mounting plate
		B-21715	2	13.5" - 19" ride heights; pattern 1 air spring mounting plate
		B-22390	2	13.5" - 19" ride heights; pattern 2 air spring mounting plate
		B-27264	2	13.5" - 19" ride heights; pattern 3 air spring mounting plate
11	**AIR SPRING SPACER**[4]			Standard travel
	17" ride height	B-22510-1	2	
	16" and 18" ride heights	B-22510-2	2	Only on ZMD air spring and weld-on frame bracket for 16" ride height
	19" ride height	B-22510-3	2	
12	**AIR SPRING MOUNTING KIT**[5]			(1) per air spring
	12" ride height	S-22907 / 2	2	Standard frame thickness
	13.5" - 16" ride heights	S-22619 / 2	2	Standard frame thickness
	17" ride height	S-22630 / 2	2	Standard frame thickness
	18" ride height	S-22631 / 2	2	Standard frame thickness
	19" ride height	S-22632 / 2	2	Standard frame thickness
13	**AIR SPRING PEDESTAL KITS**			Includes 2 pedestals, 6 nuts and 6 screws
	13.5" - 14" ride heights	S-27447-1	2	
	15" ride height	S-27447-3	2	
	16" - 19" ride heights	S-27447-4	2	Only on standard air springs for 16" ride height
	16" ride height	S-27447-2	2	Only on ZMD air spring and weld-on frame bracket

1. Options exist based on frame attachment, frame bracket style bolt hole pattern and connection. Contact Hendrickson for assistance or refer to L1266 Frame Bracket Parts List.
2. Struts are only optional for bolt-on frame brackets. Other options exist for galvanized or different track widths.
3. Please see INTRAAX® bolt-on mounting drawing, D-26651, for assistance in pattern selection. This drawing can be found in the literature section of the Hendrickson website (www.hendrickson-intl.com).
4. Air spring spacer standard options listed. Other options exist. Please contact Hendrickson for assistance.
5. Kits listed are for units with standard travel, standard air spring hardware and standard air spring mounting plate. Components may vary for limited rebound, limited jounce, thick frame or steel spacer models.

Note: Identification tag can be found on the inside of the curbside beam

SUSPENSION ASSEMBLIES

Frame Bracket Assembly

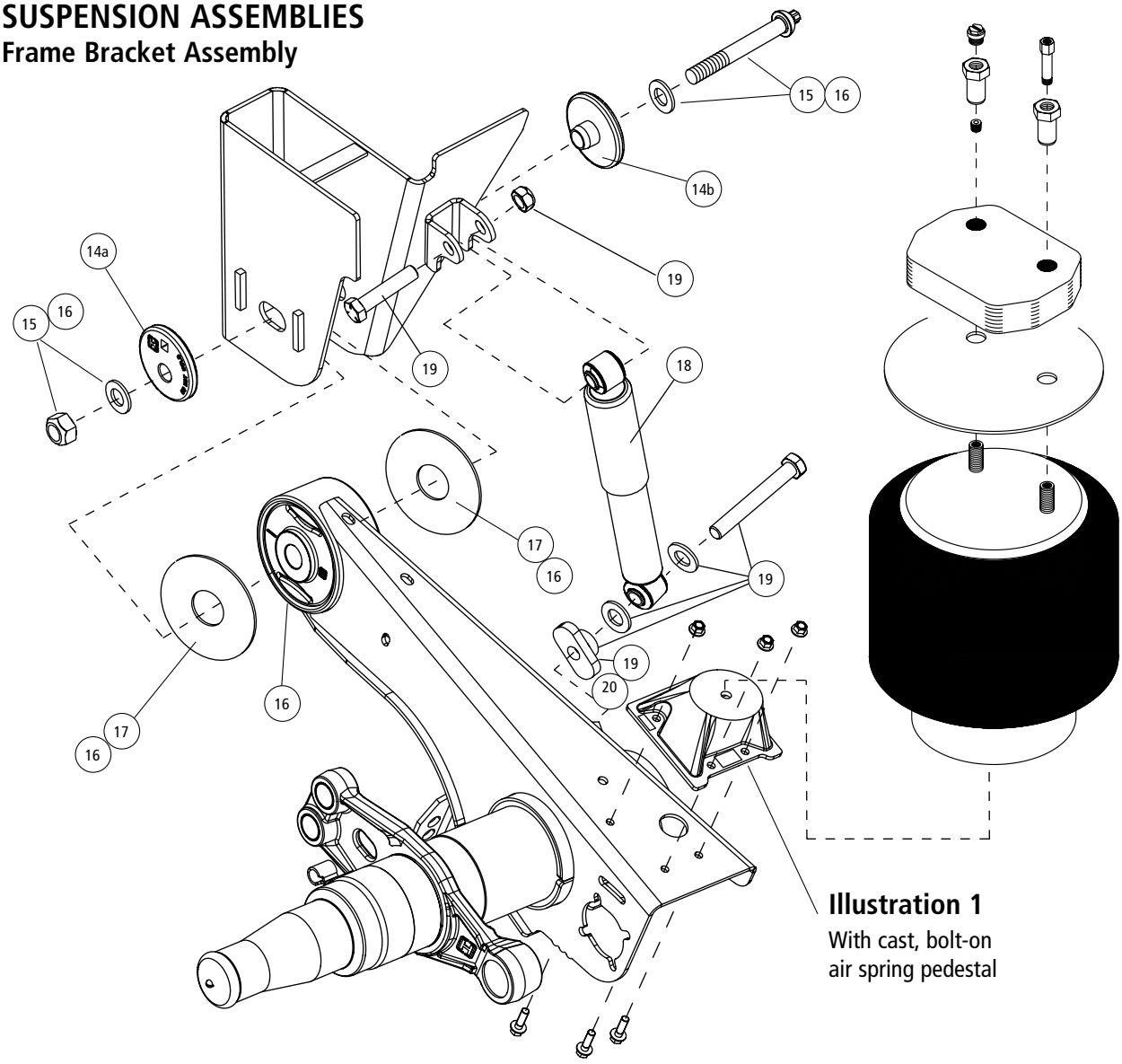

Illustration 1
With cast, bolt-on air spring pedestal

Manufactured Late August 2002 Through 2008

Illustration 2
With cast, bolt-on air spring pedestal

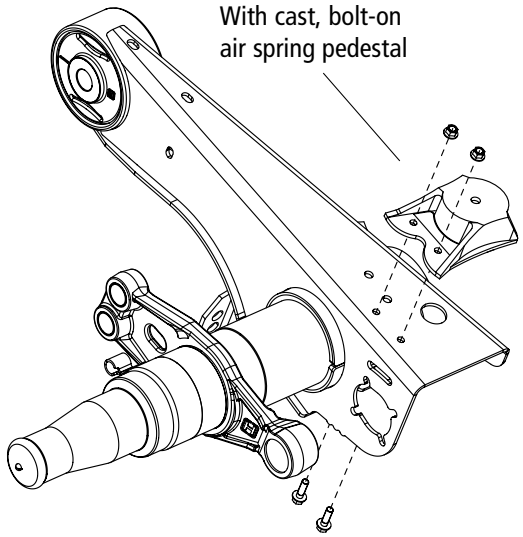

Manufactured 2001 Through 2002

Illustration 3
With 2-inch, weld-on air spring pedestal

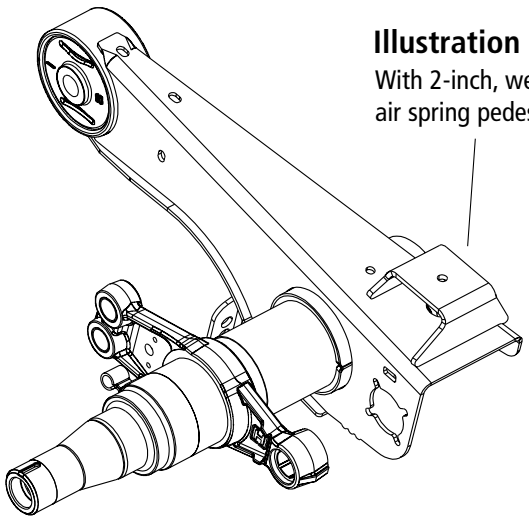

ITEM	DESCRIPTION	PART NO.	QTY.	NOTE
14	**ALIGNMENT COLLARS**			
	14a Eccentric	S-20925	2	Pivot bolt hole is offset from the center of collar
	14b Concentric	S-20924	2	Pivot bolt hole is in the center of collar
15	**QUIK-ALIGN® PIVOT BOLT KIT[7]**	S-24705	2	Includes 7" shear-type bolt, nut and washers
16	**TRI-FUNCTIONAL® BUSHING KIT[6,7]**	S-26321	1	Includes (2) bushings, pivot bolt kits (Item 15), bushing tube spacers and lube
17	**BUSHING TUBE SPACERS**	S-26807	4	
18	**FRONT SHOCK ABSORBER**			See L1287 Shock Parts List
19	**FRONT SHOCK BOLT KIT**	S-24049/2	2	
20	**SHOCK SPACER**	S-27196	1	
21	**SHOCK STRAP KIT**			See L1287 Shock Parts List

6. Bushing tool, S-24736, is required to correctly rebush the suspension.
7. Best installed with Hendrickson's E-20 socket S-24536 (1-inch drive sleeveless), S-25119 (1-inch drive sleeve) or S-24303 (3/4-inch drive sleeveless).

Note: Identification tag can be found on the inside of the curbside beam

ZMD® ZERO MAINTENANCE DAMPING® COMPONENTS (Not Shown)

ITEM	DESCRIPTION	PART NO.	QTY.	NOTE
22	**ZMD AIR SPRING**			14" - 17" ride heights only, std. travel
	Plastic piston	S-39400	2	
	Steel piston	S-35510	2	
23	**ZMD DOWNSTOP**			
	14" and 16" ride heights	S-33669	2	Only on bolt-on frame brackets for 16" ride height
	15" - 17" ride heights	S-33669-3	2	Only on weld-on frame brackets for 16" ride height
24	**ZMD DOWNSTOP BOLT KIT**	S-24049/2	2	Includes shear bolts, spacers, washers, hex bolt and hex nut
25	**ZMD SHOCK CLEVIS BOLT KIT**[8]	S-37219	2	Includes 2 tapping screws and 2 hex nuts
26	**ZMD RETROFIT KIT**			Includes 2 ZMD air springs, 2 downstop assemblies and hardware
	Winged			
	14" ride height	S-39350-1	1	
	15" ride height	S-39350-3	1	
	16" ride height			
	Bolt-on	S-39350-1	1	
	Weld-on std. frame	S-39350-5	1	
	Weld-on thick frame	S-39350-7	1	
	17" ride height	S-39350-3	1	
	Wingless			
	14" ride height	S-39350-2	1	
	15" ride height	S-39350-4	1	
	16" ride height			
	Bolt-on	S-39350-2	1	
	Weld-on std. frame	S-39350-6	1	
	Weld-on thick frame	S-39350-8	1	
	17" ride height	S-39350-4	1	
27	**AIR SPRING SPACER**	B-22510-2	2	Only on weld-on frame brackets for 16" ride height
28	**AIR SPRING PEDESTAL KIT**	S-27447-2	2	Only on weld-on frame brackets for 16" ride height

8. Required only on winged frame brackets equipped with ZMD technology.

Note: Identification tag can be found on the inside of the curbside beam

Primary Fixed Suspension System

INTRAAX® AAL Low Ride Height / Liftable

L1060 - Suspension Components 70

L1266 - Frame Brackets 275

L1287 - Shocks 294

L1182 - Vehicle Controls 302

L878 - Tire Pressure Control System 319

L1104 - Drum Brake Components 329

L949 - READY-TO-ROLL® Wheel-End Packages
& Air Disc Brake Components 337

INTRAAX® Suspension Components

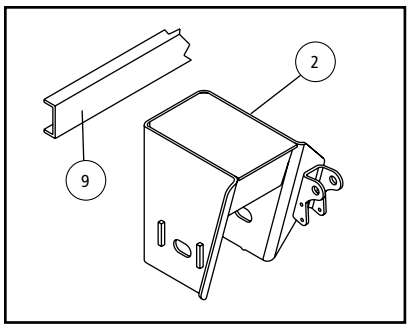

Wingless, weld-on frame bracket with QUIK-ALIGN®

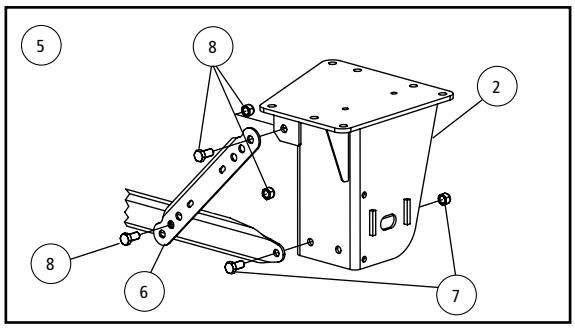

Wingless, bolt-on frame bracket with QUIK-ALIGN®

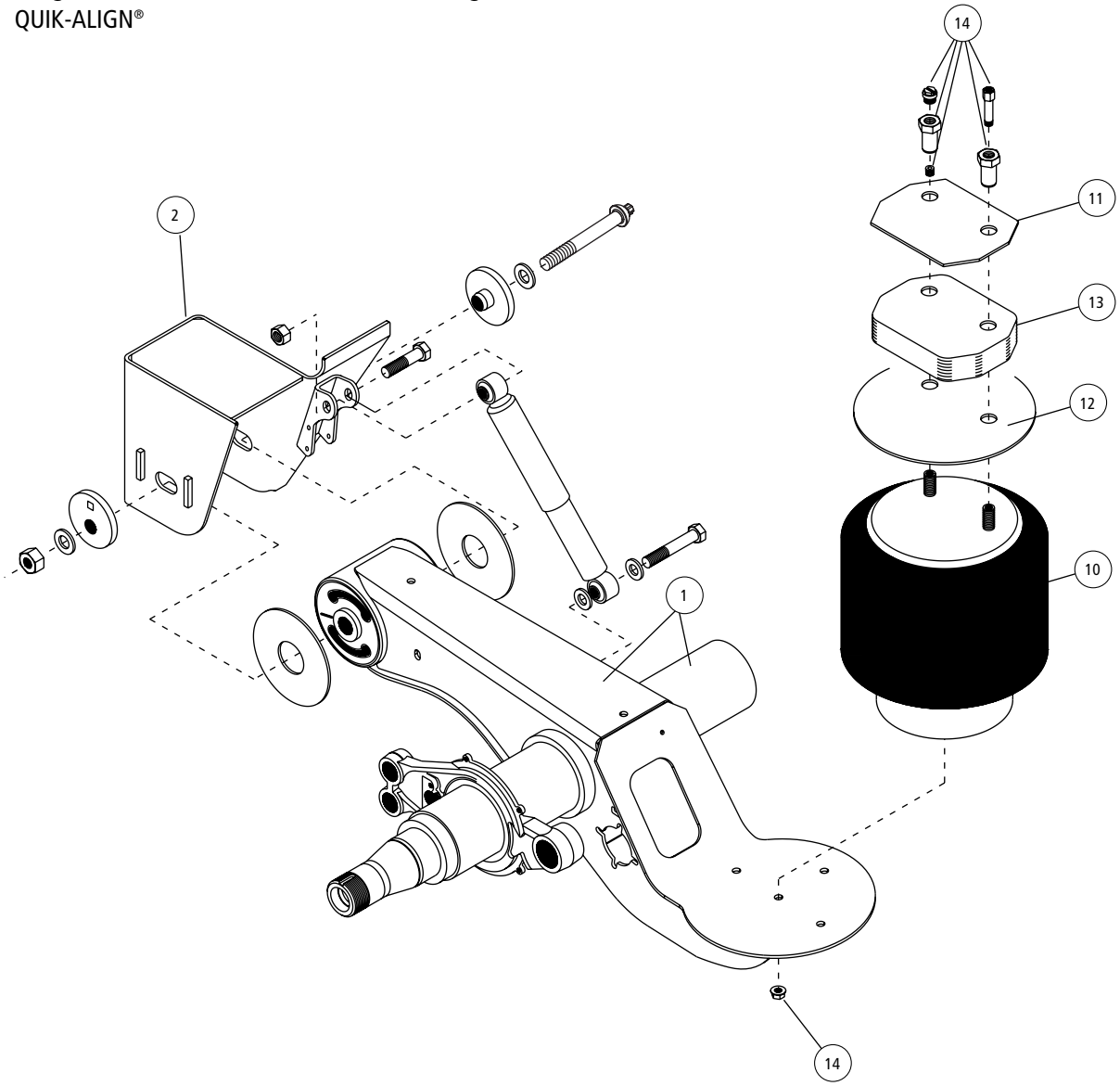

ITEM	DESCRIPTION	PART NO.	QTY.	NOTE
1	**AXLE / BEAM WELDMENT**	HTRAAX.###	1	Contact Hendrickson for assistance
2	**FRAME BRACKET**[1]			See L1266 Frame Bracket Parts List
3	**FRAME BRACKET GUSSET** (Not Shown)	S-27330	2	9" - 17" ride height
4	**FRAME BRACKET BRACE** (Not Shown)	B-2347-7	1	Used for 19" ride height
5	**BOLT-ON C-CHANNEL KIT**[2]			
	71.5" Track	S-31901-3C	1	Standard/black primer; includes c-channel, 2 struts and strut bolt kit
	77.5" Track	S-31901-1C	1	Standard/black primer; includes c-channel, 2 struts and strut bolt kit
6	**STRUT**[2]	B-30591	2	2
7	**C-CHANNEL BOLT KIT**	S-29822	1	Includes 2 screws and 2 prevailing torque nuts
8	**STRUT BOLT KIT**	S-30720	1	Includes 6 screws and 6 prevailing torque nuts
9	**WELD-ON C-CHANNEL**			
	71.5" - 77.5" Tracks	A-1631-19	1	
	83.5" - 85" Tracks	A-1631-35	1	
10	**AIR SPRING** (Standard Pressure)			
		23K **25K** **30K**		
	6.5″ - 7.5″ Ride heights	S-23720 S-23721 —	2	
	8" - 9" Ride heights	S-23613 S-23611 S-25871	2	
	12" - 19" Ride heights	S-23614 S-23612 S-25872	2	
11	**AIR SPRING MOUNTING PLATE**[3]			
	14" - 16" Ride heights	S-20905	2	Weld-on hangers
	14" - 16" Ride heights	S-21145	2	Bolt-on hangers
12	**AIR SPRING FLEX PLATE**[3]			
	9" - 19" Ride heights	S-23294	2	Weld-on and bolt-on hangers
	12" Ride heights	B-24813	2	Bolt-on hangers
13	**AIR SPRING SPACER**[3]			
	Five Inch Axle and LDA™ Large Diameter Axle			
	14" Ride height	S-22510-4	2	Weld-on and bolt-on hangers
	15" Ride height	S-22510-2	2	Weld-on and bolt-on hangers
	16″ Ride height	S-22510-3	2	Weld-on and bolt-on hangers
	17" Ride height	D-27049-5	2	Weld-on hangers
	19" Ride height	D-27049-4	2	Weld-on hangers
14	**AIR SPRINGS MOUNTING KIT**[3]			One (1) kit per air spring
		23K / 25K **30K**		
	6.5″ - 12.0″ Ride height	S-22619/2 —	2	
	9″ - 12.0″ Ride height	— S-25452/2	2	
	14.0″ Ride height	S-22630/2 S-25453/2	2	
	15.0″ Ride height	S-22631/2 S-25454/2	2	
	16.0″ Ride height	S-22632/2 S-25455/2	2	
	17.0″ Ride height	S-22619/2 S-25452/2	2	
	19.0″ Ride heights	S-22619/2 S-25452/2	2	

1. Options exist based on frame attachment, frame bracket style, bolt hole pattern and connection. Contact Hendrickson for assistance or refer to L1266 Frame Bracket Parts List.
2. Struts are only optional for bolt-on frame brackets. Other options exist for galvanized or different track widths.
3. Standard options listed. Other options exist. Contact Hendrickson for assistance.

Note: Identification tag can be found on the inside of the curbside beam.

INTRAAX® Suspension Components

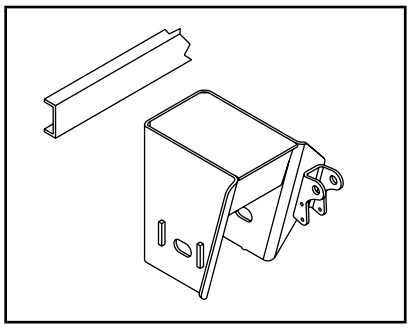

Wingless, weld-on frame bracket with QUIK-ALIGN®

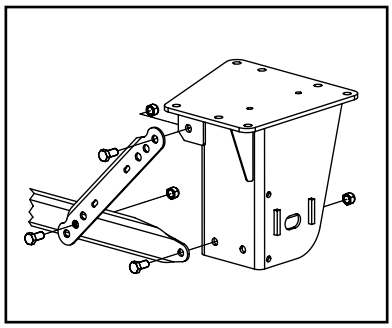

Wingless, bolt-on frame bracket with QUIK-ALIGN®

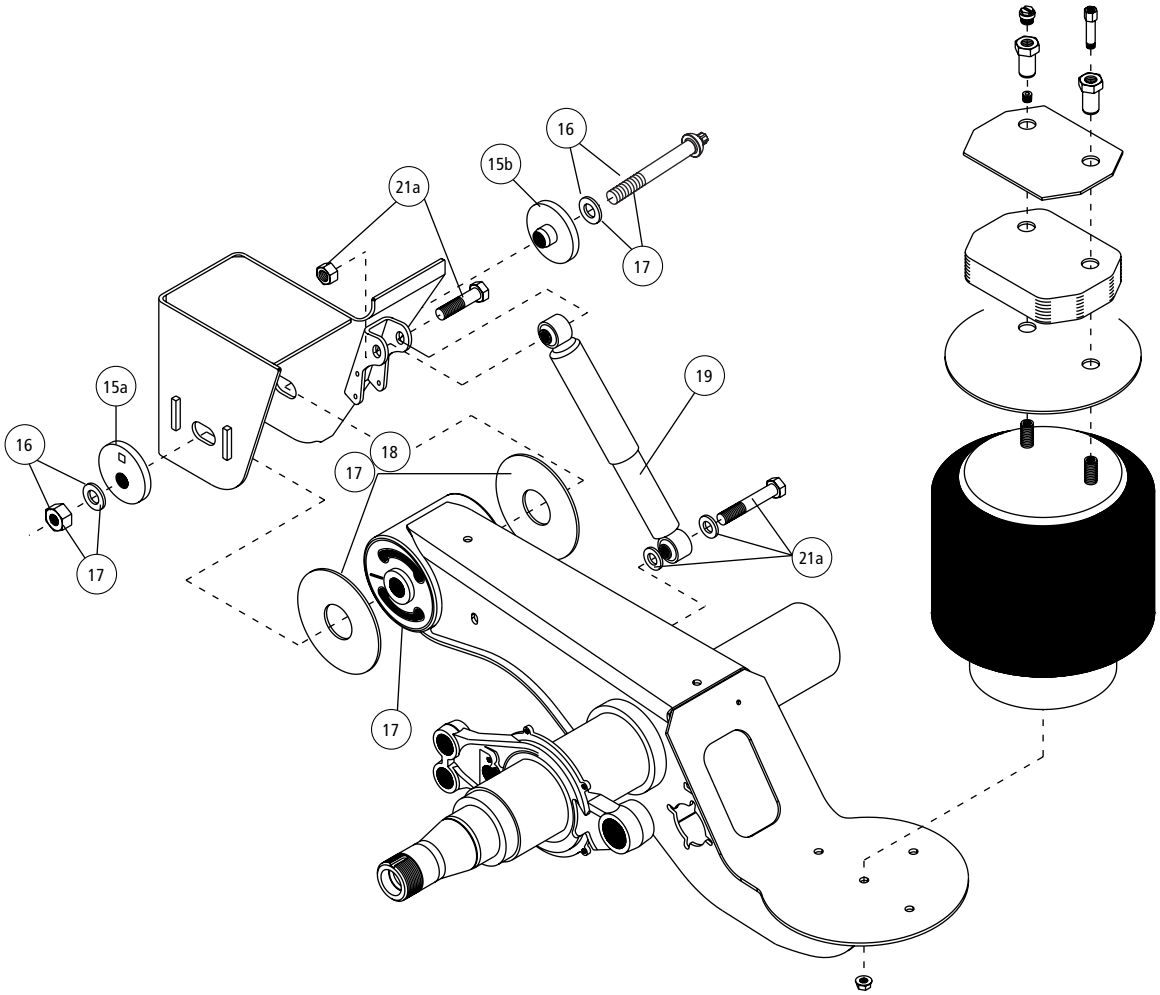

ITEM	DESCRIPTION	PART NO.		QTY.	NOTE
15	**ALIGNMENT COLLARS**				
	15a Eccentric	S-20925		2	Pivot bolt hole is offset from center of collar
	15b Concentric	S-20924		2	Pivot bolt hole is in center of collar
16	**QUIK-ALIGN® PIVOT BOLT KIT**[4]	S-24679		2	Includes 10" bolt, hexnut and (2) hardened washers
17	**TRI-FUNCTIONAL® BUSHING KIT**[4,5]	S-24691		2	Includes (1) TRI-FUNCTIONAL® Bushing, (1) pivot bolt kit, (2) bushing tube spacers and lube packet
18	**BUSHING TUBE SPACERS**	S-21099		4	
19	**FRONT SHOCK ABSORBER**				
	6.5" - 9" Ride heights	S-23651		2	Standard travel, standard duty cycle
	6.5" - 9" Ride heights	S-24579		2	Standard travel, extended service
	12" Ride height	S-23566		2	Standard travel, standard duty cycle
	12" Ride height	S-24023		2	Standard travel, extended service
	14" - 19" Ride heights	S-2212		2	Standard travel, standard duty cycle
	14" - 19" Ride heights	S-23316		2	Standard travel, extended service
20	**REAR SHOCK ABSORBER** (Not Shown)				
	6.5" - 7.5" Ride heights	S-20345		2	
	9" - 12" Ride heights	S-25436		2	
	14" - 17" Ride heights	S-25437		2	
21	**SHOCK BOLT KIT**				
		5-inch	**LDA™**		
	21a Front shock absorber	S-24757/2	S-31080/2	2	(1) One kit per shock
	21b Rear shock absorber (Not Shown)	S-2157/2	S-2157/2	2	(1) One kit per shock

4. Best installed with Hendrickson's E-20 socket S-24536 (1-inch drive sleeveless), S-25119 (1-inch drive sleeve) or S-24303 (3/4-inch drive sleeveless).
5. Bushing tool S-21307 is required to correctly rebush the suspension.

NOTES

Primary Fixed Suspension System

INTRAAX® AANL Low Ride / Liftable

L1051 - Suspension Components 76

L1266 - Frame Brackets 275

L1287 - Shocks 294

L1182 - Vehicle Controls 302

L878 - Tire Pressure Control System 319

L1104 - Drum Brake Components 329

L949 - READY-TO-ROLL® Wheel-End Packages
& Air Disc Brake Components 337

INTRAAX® Suspension Components

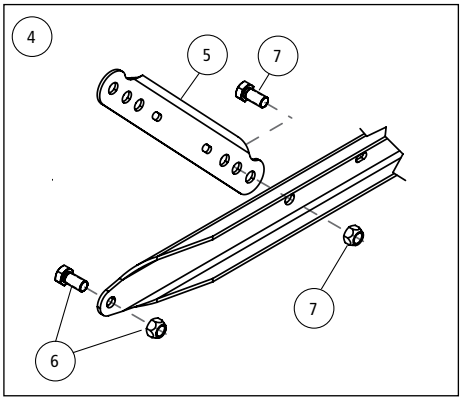

Bolt-on C-channel

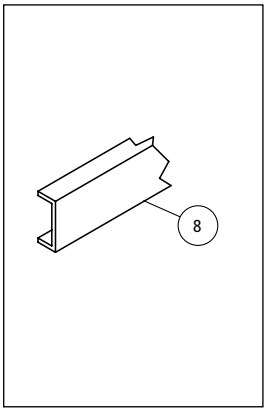

Weld-on C-channel

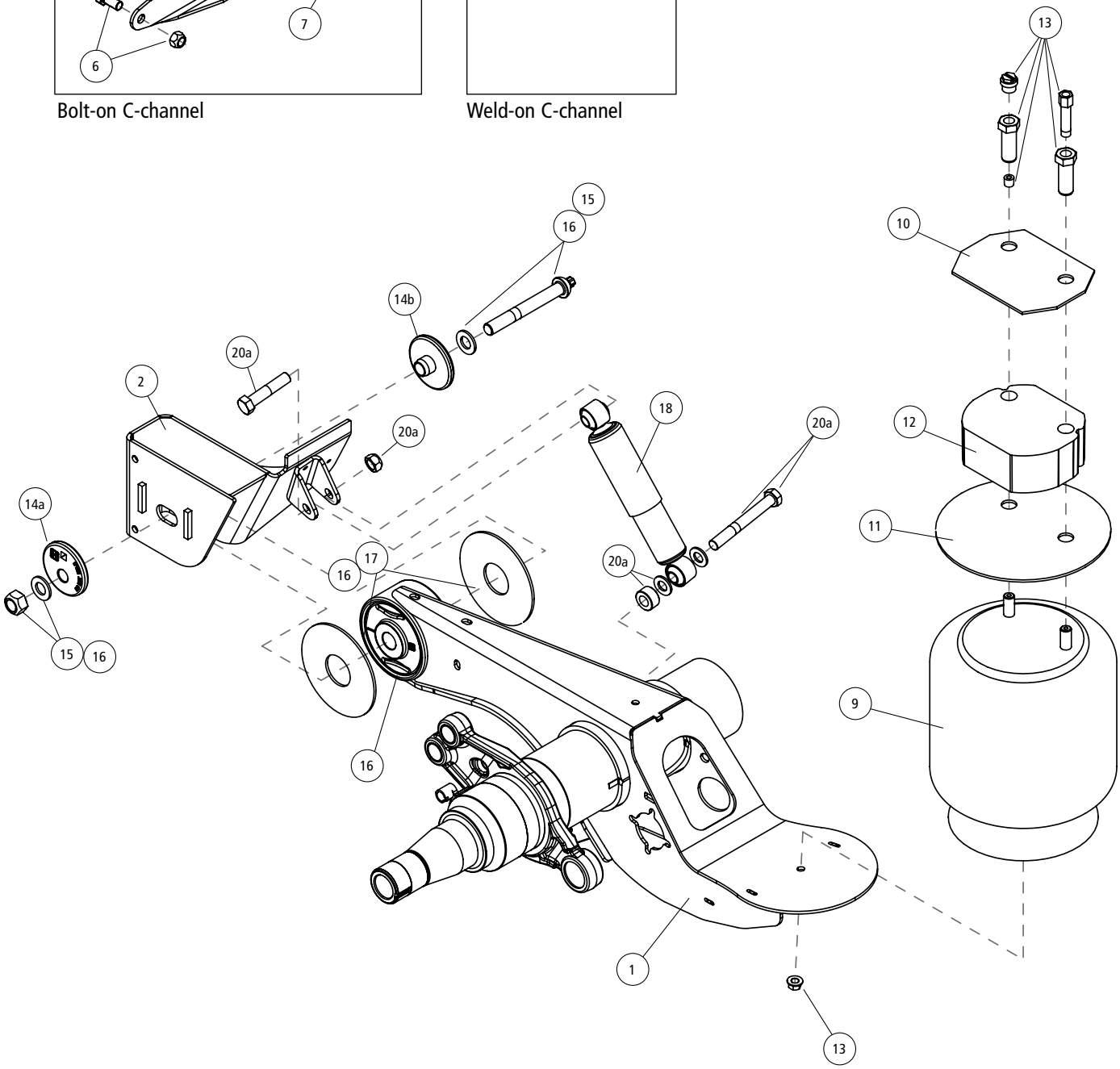

ITEM	DESCRIPTION	PART NO.	QTY.	NOTE
1	**AXLE/BEAM WELDMENT**	HTRAAX.XX		Contact Hendrickson for assistance
2	**FRAME BRACKET**[1]			See L1266 Frame Bracket Parts List
3	**FRAME BRACKET GUSSET** (For winged weld-on) (Not Shown)	S-27330	2	
4	**BOLT-ON C-CHANNEL KIT**[2]			
	73.0" Track	S-31901-4C	1	Standard black primer; includes a c-channel, 2 struts and strut bolt kit
	77.5" Track	S-31901-2C	1	Standard black primer; includes a c-channel, 2 struts and strut bolt kit
5	**STRUTS**[2]	B-30591	2	12" and 19" ride heights (NA with 6.5" – 9" RH)
6	**C-CHANNEL BOLT-KIT**	S-29822	1	2 screws and 2 prevailing torque nuts
7	**STRUT BOLT-KIT**	S-30720	1	6 screws and 6 prevailing torque nuts
8	**WELD-ON C-CHANNEL**			
	71.5" Track	C-27375-1	1	7" C-Channel
	77.5" Track	C-27375	1	7" C-Channel
9	**AIR SPRING**			
	Standard Pressure	S-23720	2	6.5" and 7.5" ride heights
		S-23613	2	8" and 9" ride heights
		S-23614	2	12" to 17" ride heights
	Low Pressure	S-23721	2	6.5" and 7.5" ride heights
		S-23611	2	8" and 9" ride heights
		S-23612	2	12" to 17" ride heights
10	**AIR SPRING MOUNTING PLATE**[3]	S-20905	2	Weld-On
11	**AIR SPRING FLEX PLATE**	S-23294	2	Used as mounting plate for 6.5" and 7.5" RH
12	**AIR SPRING SPACER**			
	Plastic	B-22510-3	2	3-1/8", 15" and 16" ride heights
		B-22510-4	2	3/4", 14" ride height
	Steel (Weld-on)	D-27049-5	2	4-13/16", 17" ride height
13	**AIR SPRING MOUNTING KIT**			
	6.5" - 12" and 17" - 19" ride heights	S-22619/2	2	Standard frame thickness
	14" ride height	S-22630/2	2	Standard frame thickness
	15" and 16" ride heights	S-22632/2	2	Standard frame thickness
14	**ALIGNMENT COLLARS**			
	14a Eccentric	S-20925	2	Pivot bolt hole is offset from center of collar
	14b Concentric	S-20924	2	Pivot bolt hole is in center of collar
15	**QUIK-ALIGN® PIVOT BOLT KIT**[4]	S-24705	2	Pivot bolt, nut and two washers.
16	**TRI-FUNCTIONAL® PIVOT BUSHING KIT**[4, 5]	S-26321	1	2 pivot bushings, 2 pivot bolts, nuts, washers, lube pack and bushing tube spacers.
17	**BUSHING TUBE SPACERS**	S-26807	4	
18	**FRONT SHOCK ABSORBER**			
	Standard	S-23651	2	6.5" - 9" ride heights
	Extended Service, High Damping	S-24579	2	6.5" - 9" ride heights
		S-25515	2	12" - 17" ride heights
19	**REAR SHOCK ABSORBER** (Not Shown)			
	Extended Service, High Damping	S-20345	2	6.5" - 7.5" ride heights
		S-25436	2	8" - 12" ride heights
		S-25437	2	14" - 17" ride heights

1. Options exist based on frame attachments, frame bracket style, bolt hole pattern and connection. Contract Hendrickson for assistance, or refer to L1266 Frame Bracket Parts List.
2. Struts are only optional for bolt-on frame brackets. Other options exist for galvanized or different track widths.
3. Bolt-on air spring mounting plates exist. Please contact Hendrickson for assistance
4. Best installed with Hendrickson's E-20 socket S-24536 (1-inch drive) or S-24303 (3/4-inch).
5. Bushing tool S-24736 is required to correctly rebush the suspension.

NOTE: Identification can be found on the inside of the curbside beam assembly.

INTRAAX® Suspension Components

ITEM	DESCRIPTION	PART NO.	QTY.	NOTE
20	**SHOCK BOLT KIT**			
	20a Front Shock Absorber	S-29199/2	2	
	20b Rear Shock Absorber (Not Shown)	S-2157/2	2	
21	**REAR UPPER SHOCK CLEVIS** (Not Shown)			
	6.5" – 7.5", 12" and 15" – 17" ride heights	S-25420	2	
	8" – 9" and 14" ride heights	S-29967	2	
22	**REAR SHOCK TOWER** (Not Shown)			
	Roadside	S-36122-1	1	
	Curbside	S-36122-2	1	
23	**REAR SHOCK TOWER BACKING PLATE** (Not Shown)	S-34790	2	
24	**REAR SHOCK TOWER BOLT KIT** (Not Shown)	S-25449/2	2	4 flange screws and 4 prevailing torque hex nuts
25	**AXLE FILTER KIT** (Not Shown)			
	HP	S-24960	1	
	HN	S-24963	1	
26	**SPINDLE NUT KIT** (Not Shown)			
	HP	S-20475/2	2	
	HN	S-20492/2	2	

Primary Fixed Suspension System

INTRAAX® AANLS Low Ride Height Short Beam

L1050 - Suspension Components 80

L1266 - Frame Brackets 275

L1287 - Shocks 294

L1182 - Vehicle Controls 302

L878 - Tire Pressure Control System 319

L1104 - Drum Brake Components 329

L949 - READY-TO-ROLL® Wheel-End Packages & Air Disc Brake Components 337

INTRAAX® Suspension Components

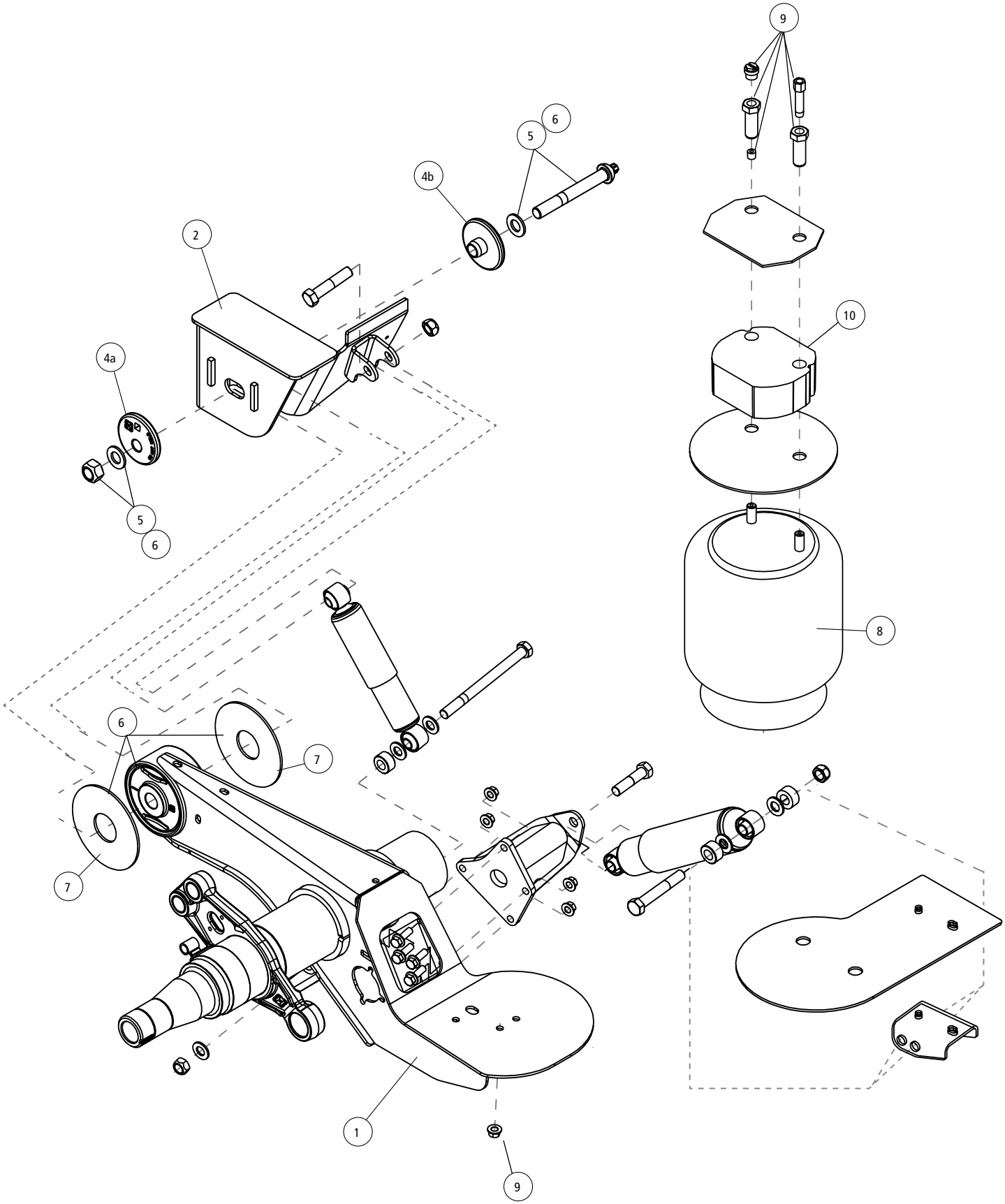

ITEM	DESCRIPTION	PART NO.	QTY.	NOTE
1	**AXLE/BEAM WELDMENT**	HTRAAX.XXX	1	Contact Hendrickson for assistance
2	**FRAME BRACKETS**[1]			See L1266 Frame Bracket Parts List
3	**FRAME BRACKET GUSSET** (Not Shown)			
	Standard Mount	S-27330	1	
	Flush Mount	S-28516	1	
4	**ALIGNMENT COLLARS**			
	4a Eccentric	S-20925	2	Pivot bolt hole is offset from center of collar
	4b Concentric	S-20924	2	Pivot bolt hole is in center of collar
5	**QUIK-ALIGN® PIVOT BOLT KIT**[3]	S-24705	2	Includes 7" bolt, hex nut and (2) hardened washers
6	**TRI-FUNCTIONAL® III BUSHING KIT**[2, 3]	S-26321	2	Includes (2) tri-functional bushings, (2) pivot bolt kits, (4) bushing tube spacers and lube packet
7	**BUSHING TUBE SPACERS**	S-26807	4	
8	**AIR SPRING**	S-23721	2	All ride heights
9	**AIR SPRING MOUNTING KIT**			
		S-22619/2	2	6.25" and 7" ride heights; no air spring spacer
		S-22632/2	2	9" and 12" ride heights; standard air spring spacer
		S-22630/2	2	6.25" and 7" ride height; thick frame .90" to 1.25" thickness
		S-22619/2	2	All ride heights with steel air spring spacer
10	**AIR SPRING SPACER**			
	Plastic Spacer	B-22510-3	2	9" and 12" ride heights
	Steel Spacer		1	9" and 12" ride heights
	Roadside	D-28398-2L		Use with extended service rear shock and
	Curbside	D-28398-2R		Narrow air spring centers
	Steel Spacer	D-28397	2	9" and 12" ride heights Use when unit has no rear shock

1. Other options exist based on frame attachment, frame bracket style, bolt hole pattern and connection. Contact Hendrickson for assistance or refer to L1266 Frame Bracket Parts List.
2. Bushing tool, S-24736, is required to correctly rebush the suspension.
3. Best installed with Hendrickson's E-20 socket S-24536 (i-inch drive) or S-24303 (3/4-inch drive).

INTRAAX® Suspension Components

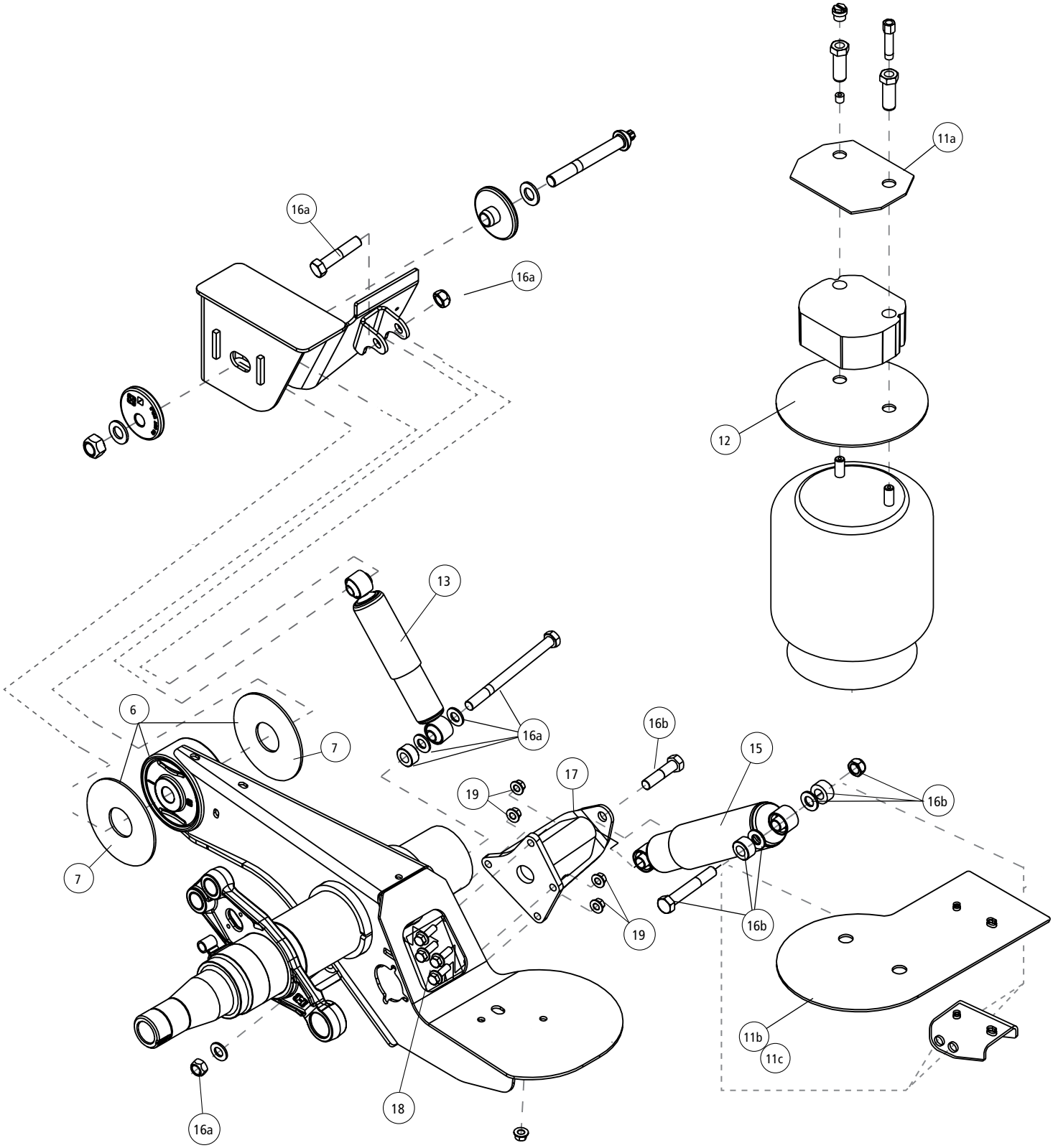

ITEM	DESCRIPTION	PART NO.	QTY.	NOTE
11	**AIR SPRING MOUNTING PLATE**			
	11a Roadside Curbside	S-20905	2	9" and 12" ride heights Standard travel or limited rebound; Standard Air spring hardware; no rear shock
	11b Roadside Curbside	C-26157-1L C-26157-1R	1	All ride heights; narrow air spring centers Standard travel or limited rebound; Standard Air spring hardware; extended service rear shock
	11c Roadside Curbside	C-26157-2L C-26157-2R	1 1	All ride heights; Standard travel or limited rebound; Steel air spring spacer; Extended service rear shock
12	**AIR SPRING FLEX PLATE**	S-23294	2	All ride heights
13	**FRONT SHOCK ABSORBER**			
	6.25" - 9" ride heights	S-23651	2	Standard Duty
	12" ride height	S-23566	2	Standard Duty
	6.25" - 9" ride heights	S-24579	2	Extended Service / High Damping Shock
	12" ride height	S-24023	2	Extended Service / High Damping Shock
14	**SHOCK STRAP** (Not Shown)			Includes 2 shock straps, 2 clevis and 4 nylon ties
	6.25" - 9" Ride Height	C-23086-4	1	Use with S-23651 shock
	6.25" - 9" Ride Height	C-23086-8	1	Use with S-24579 shock
	12" Ride Height	C-23086-1	1	Use with S-23566 shock
	12" Ride Height	C-23086-2	1	Use with S-24023 shock
15	**REAR SHOCK ABSORBER**			
	6.25" and 7" Ride Heights	S-25515	2	
	9" Ride Height	S-23316	2	
16	**SHOCK BOLT KITS**			
	16a Front Shock Absorber	S-26154/2	2	1 kit required per shock
	16b Rear Shock Absorber	S-26161/2	2	
17	**REAR SHOCK TOWER**			
	Roadside Curbside	D-24807-1 D-24807-2	1 1	
18	**REAR SHOCK TOWER BOLT**	SA-6900-24	8	
19	**REAR SHOCK TOWER NUT**	SA-7000-1	8	
20	**REAR SHOCK TOWER BACKING PLATE** (Not Shown)	S-37171	2	

NOTE: Identification tag can be found on the inside of the curbside beam.

NOTES

Primary Fixed Suspension System

INTRAAX® AAEDT / AAEDL Extreme Duty

L1058 - Suspension Components 86

L1059 - Suspension Components 91

L1266 - Frame Brackets 275

L1287 - Shocks 294

L1182 - Vehicle Controls 302

L878 - Tire Pressure Control System 319

L1104 - Drum Brake Components 329

L949 - READY-TO-ROLL® Wheel-End Packages
& Air Disc Brake Components 337

INTRAAX® Suspension Components

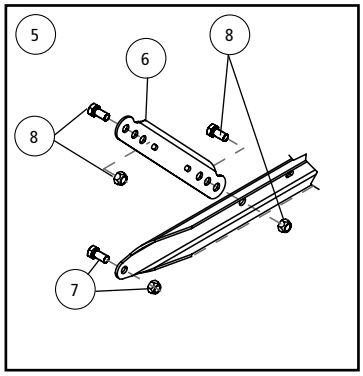

Bolt-on C-Channel

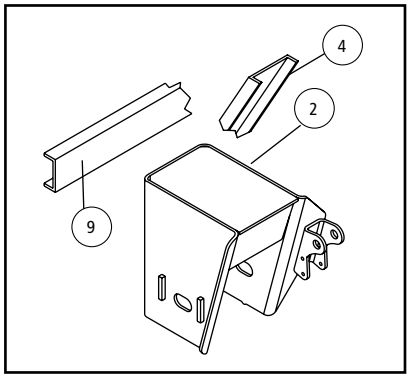

Wingless, weld-on frame bracket with QUIK-ALIGN®

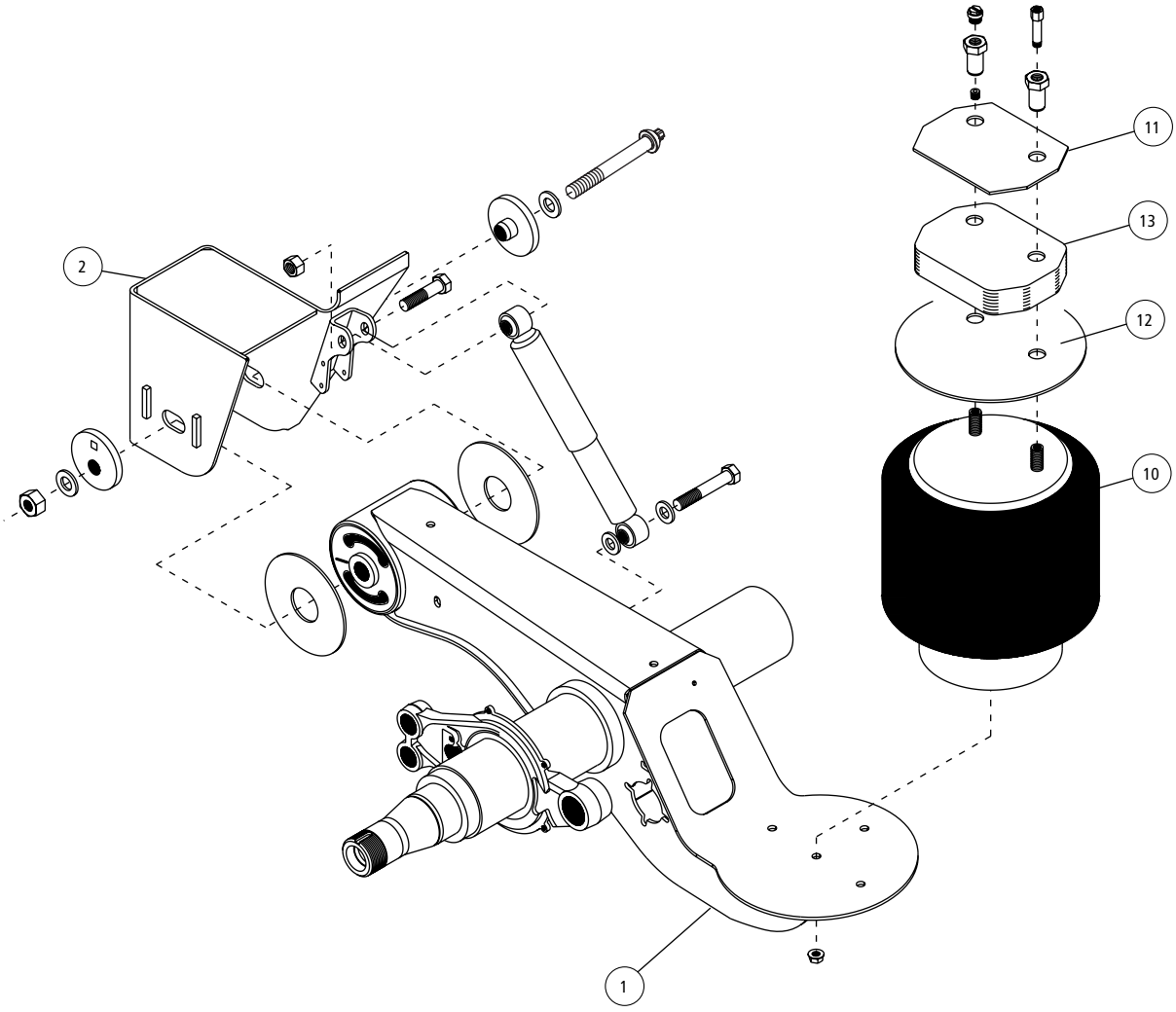

ITEM	DESCRIPTION	PART NO.	QTY.	NOTE
1	**AXLE/BEAM WELDMENT**	HTRAAX.XXX	1	Contact Hendrickson for assistance
2	**FRAME BRACKET**[1]			See L1266 Frame Bracket Parts List
3	**FRAME BRACKET GUSSET** (Not shown)	S-27330	2	14" and 15" ride heights
4	**FRAME BRACKET BRACE**	B-2347-7	1	16" and 17" ride heights
5	**BOLT-ON C-CHANNEL KIT**[2]			
	71.5" Track	S-31901-3C	1	Standard/black primer; includes c-channel, 2 struts and strut bolt kit
	77.5" Track	S-31901-1C	1	Standard/black primer; includes c-channel, 2 struts and strut bolt kit
6	**STRUT**[2]	B-30591	2	
7	**C-CHANNEL BOLT KIT**	S-29822	1	Includes 2 screws and 2 prevailing torque nuts
8	**STRUT BOLT KIT**	S-30720	1	Includes 6 screws and 6 prevailing torque nuts
9	**WELD-ON C-CHANNEL**			
	71.5" - 77.5" Tracks	A-1631-19	1	3-inch c-channel
	83.5" - 85" Tracks	A-1631-35	1	3-inch c-channel
10	**AIR SPRING** (Standard Pressure)			
	9" ride height	S-24445	2	
	12" - 19" ride heights	S-24446	2	
11	**AIR SPRING MOUNTING PLATE**			
	Weld-on	S-20905	2	12" - 19" ride heights; standard air spring mounting plate
	Bolt-on[3]	B-21145	2	13.5" - 19" ride heights; standard air spring mounting plate
		B-21715	2	13.5" - 19" ride heights; pattern 1 air spring mounting plate
		B-22390	2	13.5" - 19" ride heights; pattern 2 air spring mounting plate
		B-27264	2	13.5" - 19" ride heights; pattern 3 air spring mounting plate
12	**AIR SPRING FLEX PLATE**			
	Weld-on	S-23294	2	9" to 19" ride heights
	Bolt-on	B-24813	2	9" and 12" ride heights
		S-23294	2	14" to 19" ride heights
13	**AIR SPRING SPACER**[4]			
	14" ride height	B-22510-4	2	Weld-on and bolt-on hangers
	15" and 16" ride heights	B-22510-3	2	Weld-on and bolt-on hangers; Standard air spring mount
	15" and 16" ride heights	D-27049-8	2	Weld-on hangers; Thick 0.9" to 1.25" air spring mount
	17" ride height	D-27049-5	2	Weld-on hangers
	19" ride height	D-27049-4	2	Weld-on hangers

1. Options exist based on frame attachment, frame bracket style, bolt hole pattern and connection. Contact Hendrickson for assistance or refer to L1266 Frame Bracket Parts List.
2. Struts are only optional for bolt-on frame brackets. Other options exist for galvanized or different track widths.
3. Please see INTRAAX Bolt-on Mounting Drawing, D-26651, for assistance in pattern selection. This drawing can be found in the literature section of the Hendrickson website (www.hendrickson-intl.com).
4. Other options exist. Contact Hendrickson for assistance.

Note: Identification tag can be found on the inside of the curbside beam.

INTRAAX® Suspension Components

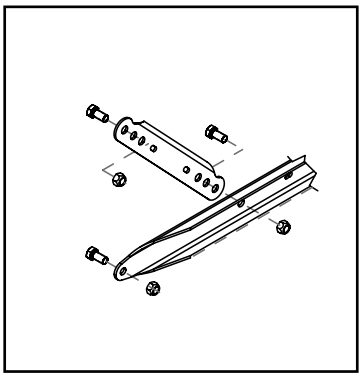

Bolt-on C-Channel

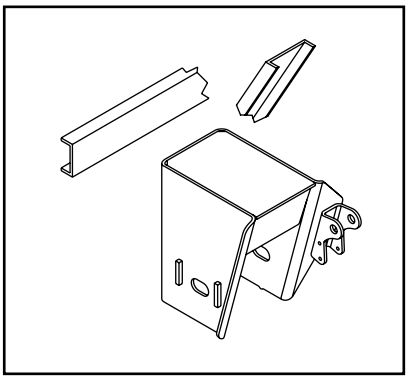

Wingless, weld-on frame bracket with QUIK-ALIGN®

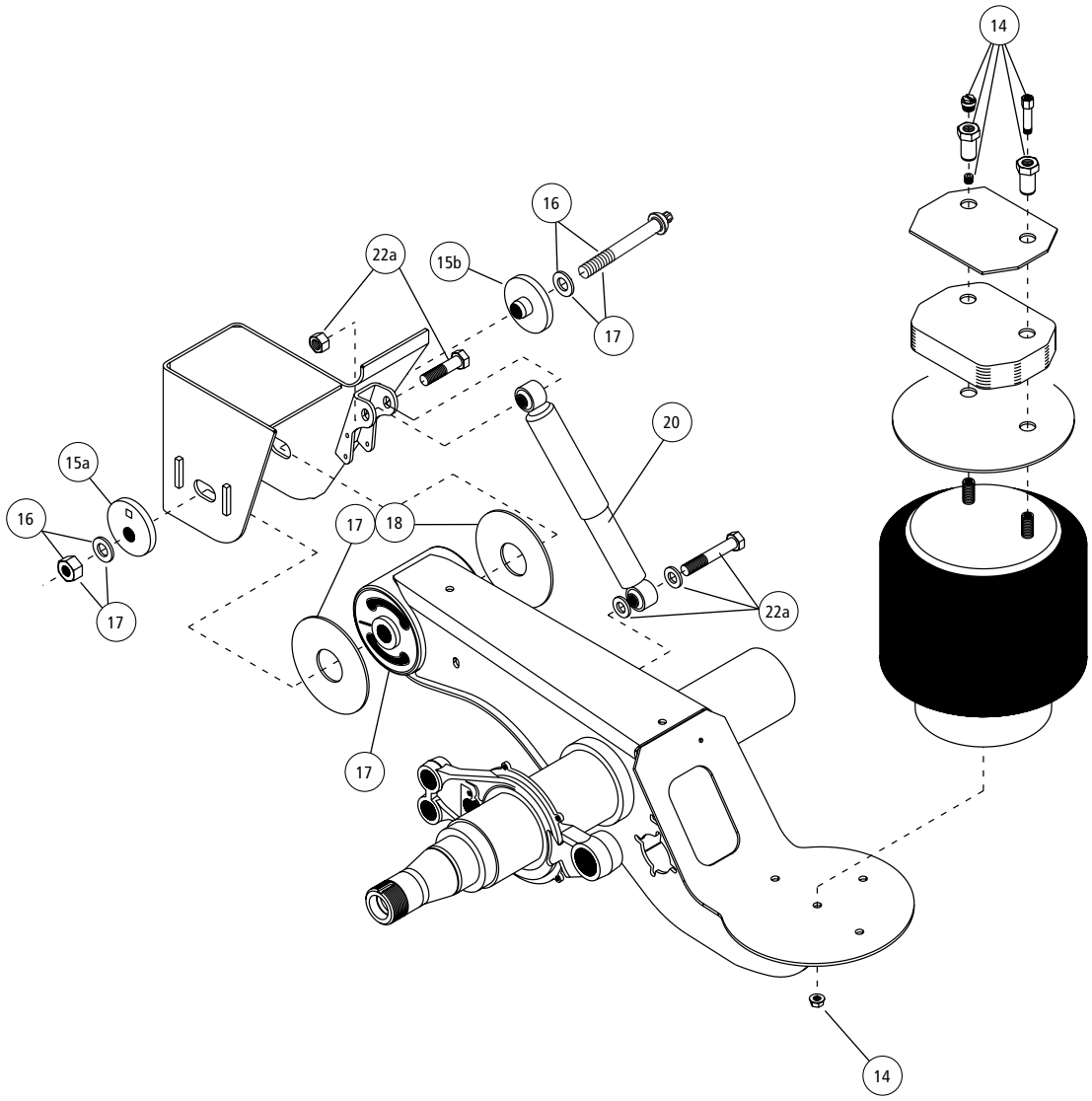

ITEM	DESCRIPTION	PART NO.	QTY.	NOTE
14	**AIR SPRING MOUNTING KIT**			One (1) kit per air spring
	Standard travel			
	9" - 12" ride heights	S-25452/2	2	
	14" ride height	S-25453/2	2	
	15" - 16" ride heights	S-25455/2	2	
	17" - 19" ride heights	S-25452/2	2	
	Standard travel — Thick .90 - 1.25" Frame			
	9" - 12" ride heights — Thick .90 - 1.25" Frame	S-25453/2	2	
	14" ride height	S-25454/2	2	
	15" - 16" ride heights	S-25452/2	2	
	Limited jounce			
	9" - 12" ride heights — Thick .90 - 1.25" Frame	S-25454/2	2	
	14" ride height	S-25455/2	2	
	15" - 19" ride heights	S-25452/2	2	
	Limited jounce — Thick .90 - 1.25" Frame			
	14" ride height	S-25455/2	2	
15	**ALIGNMENT COLLARS**			
	15a Eccentric	S-20925	2	Pivot bolt hole is offset from center of collar
	15b Concentric	S-20924	2	Pivot bolt hole is in center of collar
16	**QUIK-ALIGN® PIVOT BOLT KIT**[5]	S-24679	2	Includes 10" bolt, hexnut and (2) hardened washers
17	**TRI-FUNCTIONAL® BUSHING KIT**[5, 6]	S-24691	2	Includes (1) TRI-FUNCTIONAL Bushing, (1) pivot bolt kit (Item 11), (2) bushing tube spacers and lube packet
18	**BUSHING TUBE SPACERS**	S-21099	4	
19	**BUSHING TUBE SPACER KIT** (Not shown)	S-26369	2	Includes (2) standard bushing tube spacers, 10" shear-type bolt, hex nut and hardened washers - not available in high control
20	**FRONT SHOCK ABSORBER**			Extended service / High damping
	9" ride height	S-24579	2	
	12" ride height	S-24023	2	
	14" - 19" ride heights	S-23316	2	
21	**REAR SHOCK ABSORBER** (Not shown)			
	9" - 12" ride heights	S-25436	2	
	14" - 17" ride heights	S-25437	2	
22	**SHOCK BOLT KIT**			(1) One kit per shock
	22a Front shock absorber	S-24757/2	2	
	22b Rear shock absorber (Not shown)	S-2157/2	2	

5. Best installed with Hendrickson's E-20 Socket S-24536 (1-inch drive sleeveless), S-25119 (1-inch drive sleeve), or S-24303 (3/4 inch drive sleeveless).
6. Bushing tool (S-21307) is required to correctly rebush the suspension.

REBOUND LIMITER COMPONENTS — Not Shown

ITEM	DESCRIPTION	PART NO.	QTY.	NOTE
23	**REBOUND LIMITER CHAIN**			
	9" ride height	SA-9600-10	2	10 links
	12" ride height	SA-9600-12	2	12 links
	14" - 17" ride heights	SA-9600-14	2	14 links
	19" ride height	SA-9600-16	2	16 links
24	**CHAIN BRACKET FLANGED BOLT**	SA-6900-18	2	
		SA-6900-20	4	
25	**CHAIN BRACKET FLANGED NUT**	SA-7000-2	2	
		SA-7000-6	4	
26	**ADJUSTMENT BRACKET**	C-25426	2	
27	**ADJUSTMENT ARM**	B-25270	2	
28	**ADJUSTMENT ARM JAM NUT**	SA-3300-2	2	
29	**LOWER CHAIN BRACKET (L)**	C-25271-1	1	
30	**LOWER CHAIN BRACKET (R)**	C-25271-2	1	
31	**CHAIN BRACKET BOLT**	SA-1000-31	6	
32	**CHAIN BRACKET NUT**	SA-8900-3	6	
33	**CHAIN BRACKET WASHER**	SA-1500-6	12	

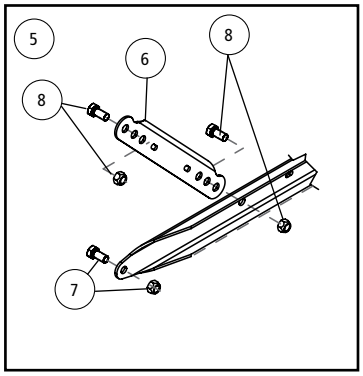

Bolt-on C-Channel

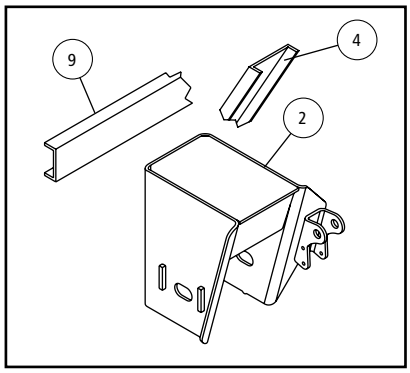

Wingless, weld-on frame bracket with QUIK-ALIGN®

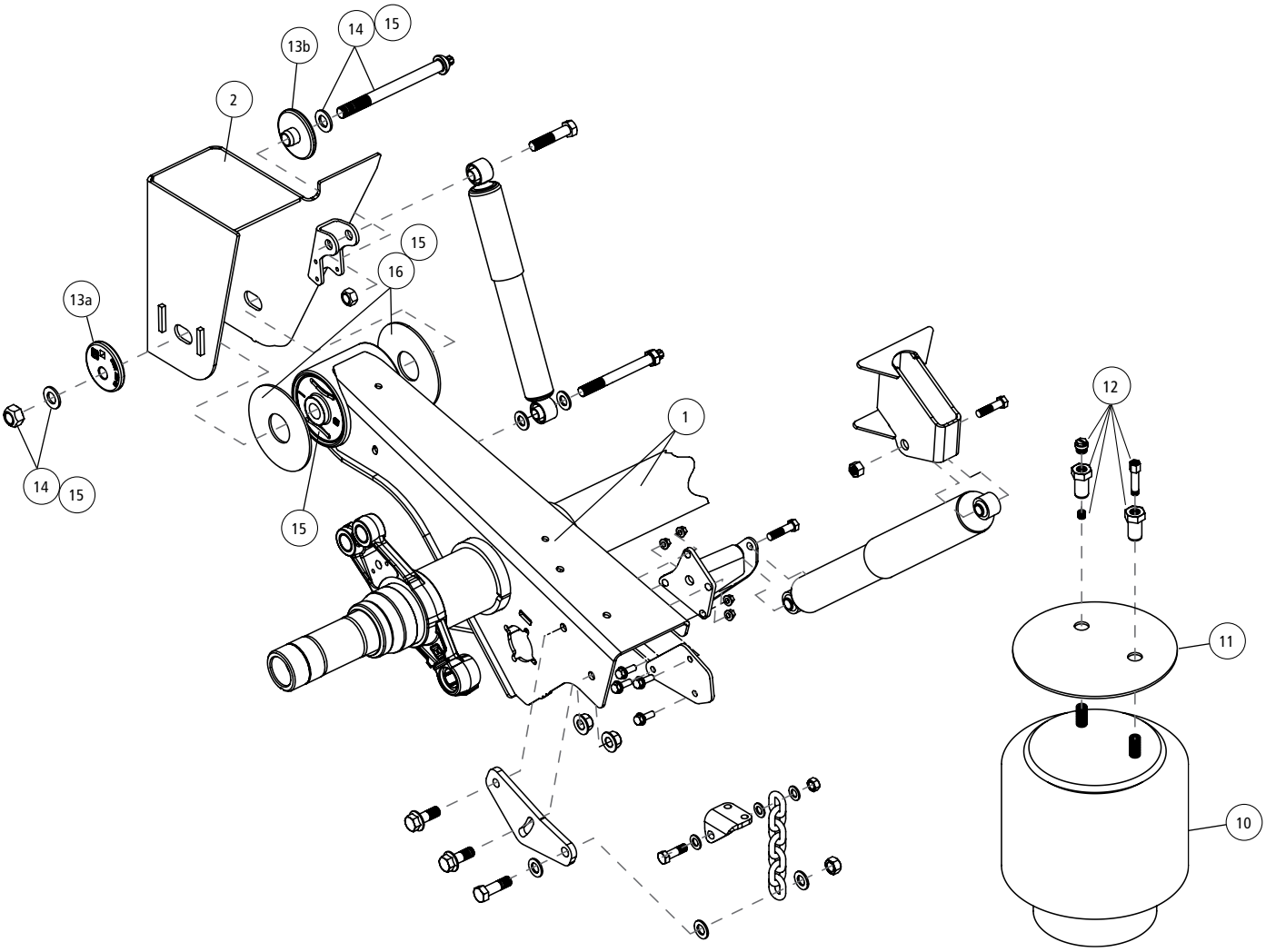

INTRAAX® Suspension Components

ITEM	DESCRIPTION	PART NO.	QTY.	NOTE
1	**AXLE/BEAM WELDMENT**	HTRAAX.XXX	1	Contact Hendrickson for assistance
2	**FRAME BRACKET**[1]			See L1266 Frame Bracket Parts List
3	**FRAME BRACKET GUSSET** (Not shown)	S-27330	2	14" and 15" ride heights
4	**FRAME BRACKET BRACE**	B-2347-7	1	16" and 17" ride heights
5	**BOLT-ON C-CHANNEL KIT**[2]			
	71.5" Track	S-31901-3C	1	Standard/black primer; includes c-channel, 2 struts and strut bolt kit
	77.5" Track	S-31901-1C	1	Standard/black primer; includes c-channel, 2 struts and strut bolt kit
6	**STRUT**[2]	B-30591	2	
7	**C-CHANNEL BOLT KIT**	S-29822	1	Includes 2 screws and 2 prevailing torque nuts
8	**STRUT BOLT KIT**	S-30720	1	Includes 6 screws and 6 prevailing torque nuts
9	**WELD-ON C-CHANNEL**			
	71.5" - 77.5" Tracks	A-1631-19	1	13.5" to 19" ride heights
	83.5" - 85" Tracks	A-1631-35	1	13.5" to 19" ride heights
10	**AIR SPRING**	S-25319	2	Use to replace C-25319
11	**AIR SPRING FLEX PLATE**			
	Weld-on	S-23294	2	
	Bolt-on	B-24813	2	14" to 17" ride heights
		S-23294	2	18" to 19" ride heights
12	**AIR SPRING MOUNTING KIT** (One per air spring)			
	Standard Frame	S-25339/2	2	
	Thick .09" to 1.25" Frame	S-25453/2	2	
13	**ALIGNMENT COLLARS**			
	13a Eccentric	S-20925	2	Pivot bolt hole is offset from center of collar
	13b Concentric	S-20924	2	Pivot bolt hole is in center of collar
14	**QUIK-ALIGN® PIVOT BOLT KIT**[3]	S-24679	2	Includes 10" shear-type bolt, nut and washers
15	**TRI-FUNCTIONAL® PIVOT BUSHING KIT**[3, 4]	S-24691	2	Includes bushing, pivot bolt kit (Item 14), bushing tube spacer and lube
16	**BUSHING TUBE SPACERS**	S-21099	4	Four required per axle
17	**BUSHING TUBE SPACER KIT** (Not shown)	S-26369	2	Includes (2) standard bushing tube spacers, 10" shear-type bolt, hex nut and hardened washers - not available in high control

1. Other options exist based on frame attachment, frame bracket style, bolt hole pattern and connection. Contact Hendrickson for assistance or refer to L1266 Frame Brackets Parts List.
2. Struts are only optional for bolt-on frame brackets. Other options exist for galvanized or different track widths.
3. Best installed with Hendrickson's E-20 socket S-24536 (1-inch drive sleeveless), S-25119 (1-inch drive sleeve) or S-24303 (3/4-inch drive sleeveless). Hendrickson recommends S-25119.
4. Bushing tool S-21307 is required to correctly rebush the suspension.

Note: Identification tag can be found on the inside of the curbside beam.

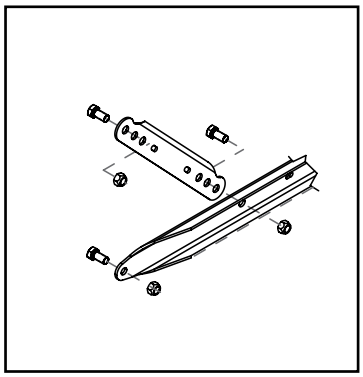

Bolt-on C-Channel

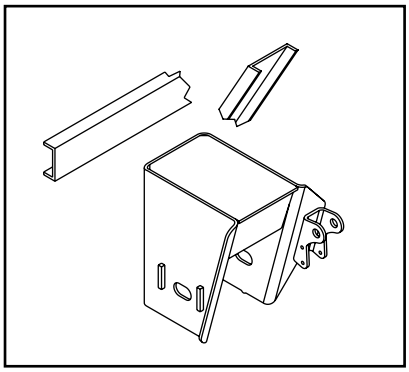

Wingless, weld-on frame bracket with QUIK-ALIGN®

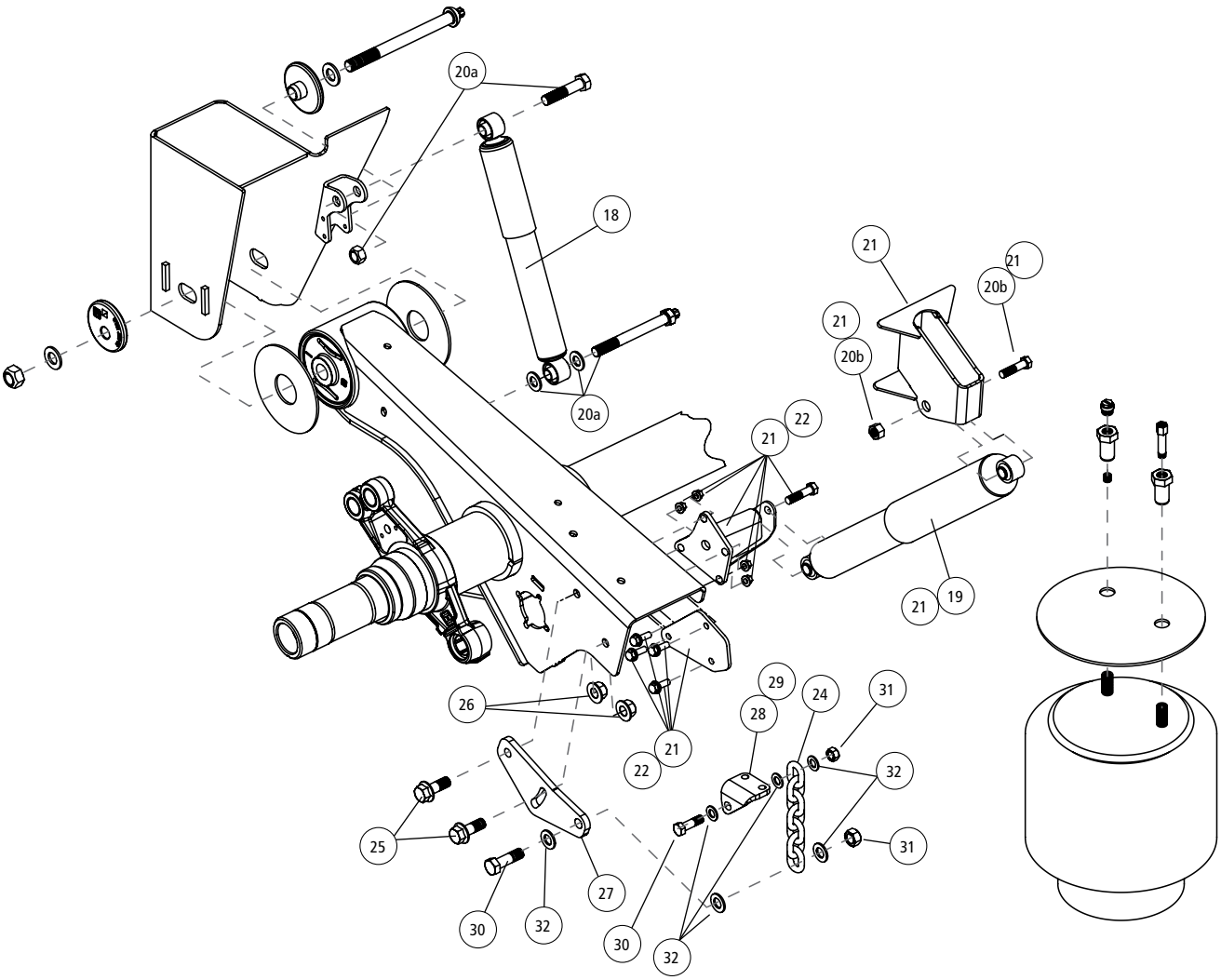

ITEM	DESCRIPTION	PART NO.	QTY.	NOTE
18	**FRONT SHOCK ABSORBER** (Extended service / High damping)			
	14" ride height	S-23316	2	
	15" and 17" ride height	S-25515	2	
19	**REAR SHOCK ABSORBER**	S-25436	2	14" and 15" ride heights
	14" and 15" ride height	S-25436	2	
	16" and 17" ride height	S-25512	2	
20	**SHOCK BOLT KIT** (One per shock)			
	20a Front shock absorber	S-24757/2	2	
	20b Rear shock absorber	S-2157/2	2	
21	**REAR SHOCK RETROFIT KIT**			
	14" and 15" ride height	S-26428	1	
	16" and 17" ride height	S-26429	1	
22	**REAR SHOCK TOWER REPLACEMENT**			
	Roadside	S-26426	1	
	Curbside	S-26427	1	
23	**SHOCK STRAP** (Not shown)			
	14" ride height	C-24041-3		Includes 2 straps, 2 clevis and 4 nylon ties
	15" - 17" ride heights	C-24041-12		Same as above

REBOUND LIMITER COMPONENTS

24	**REBOUND LIMITER CHAIN**			
	15" ride height	SA-9600-13	2	13 links
	14", 16", 17" ride heights	SA-9600-15	2	15 links
	19" ride height	SA-9600-17	2	17 links
25	**CHAIN BRACKET FLANGED BOLT**	SA-6900-20	4	
26	**CHAIN BRACKET FLANGED NUT**	SA-7000-6	4	
27	**LOWER CHAIN BRACKET**	B-25333	2	
28	**UPPER CHAIN BRACKET (L)**	C-25271-1	1	
29	**UPPER CHAIN BRACKET (R)**	C-25271-2	1	
30	**CHAIN BRACKET BOLT**	SA-1000-31	4	
31	**CHAIN BRACKET NUT**	SA-8900-3	4	
32	**CHAIN BRACKET WASHER**	SA-1500-6	12	

Primary Fixed Suspension System

CONNEX® Unitized Trailer Air Suspension System

L1280 - Suspension Components 96

L1266 - Frame Brackets 275

L1287 - Shocks 294

L1182 - Vehicle Controls 302

L878 - Tire Pressure Control System 319

L1104 - Drum Brake Components 329

L949 - READY-TO-ROLL® Wheel-End Packages & Air Disc Brake Components 337

CONNEX® Suspension Components

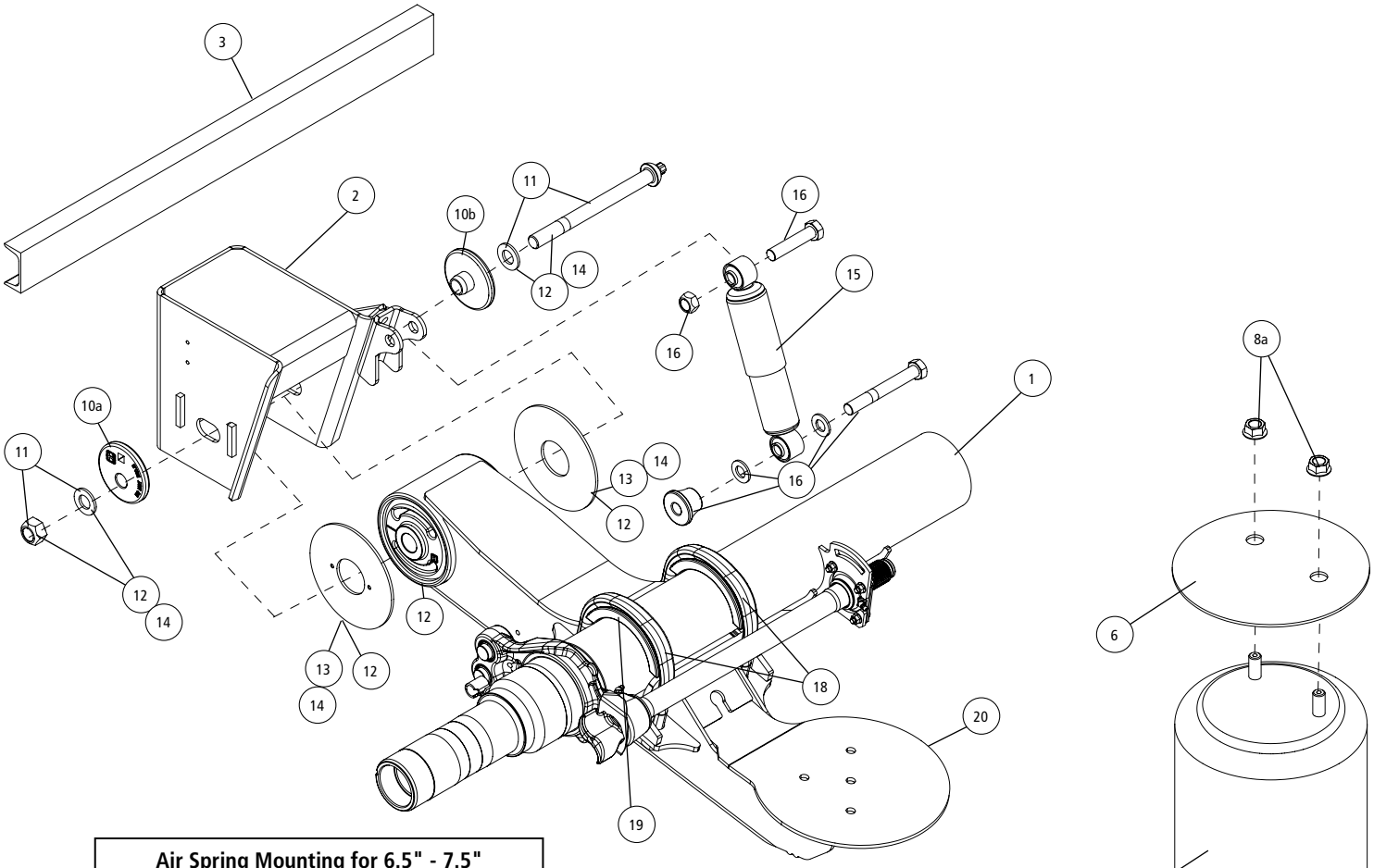

Air Spring Mounting for 6.5" - 7.5" Ride Heights; Limited Jounce

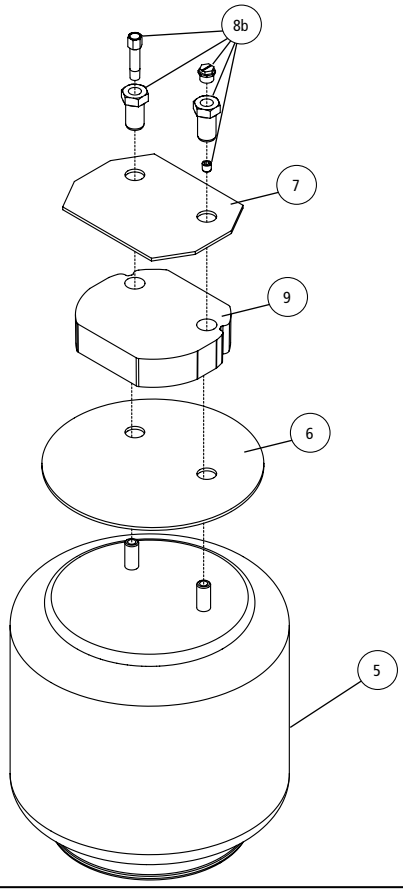

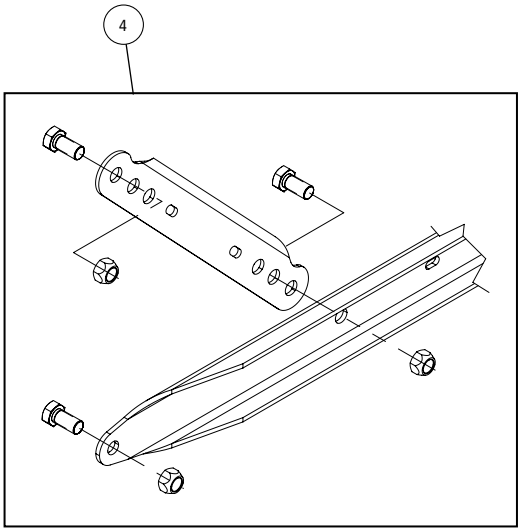

ITEM	DESCRIPTION	PART NO.	QTY.	NOTE
1	**AXLE / BEAM WELDMENT**		1	Contact Hendrickson for assistance
2	**FRAME BRACKET**[1]		2	See L1266 Frame Bracket Parts List
3	**WELD-ON C-CHANNEL**	S-1631-19	1	
4	**BOLT-ON C-CHANNEL KIT**[2]			Includes: channel, struts and hardware
	41.0" suspension beam center	S-31901-1	1	
	35.0" suspension beam center	S-31901-3	1	
5	**AIR SPRING**			
	23K			
	Standard dual combo stud	S-23720	2	5.5" & 6.5" ride heights
		S-23613	2	7.5" & 9.0" ride heights
	Rotated single combo stud	S-20413	2	5.5" - 9.0" ride heights
	25K			
	Standard dual combo stud	S-23721	2	5.5" & 6.5" ride heights
		S-23611	2	7.5" & 9.0" ride heights
	Rotated single combo stud	S-20414	2	5.5" - 9.0" ride heights
6	**AIR SPRING FLEX PLATE**			
	Weld-on			
	Standard dual combo stud	S-23294	2	5.5" - 6.5" ride heights; Standard travel & 6.5" - 7.5" limited jounce
	Rotated single combo stud	S-21209	2	5.5" - 9.0" ride height
	Limited jounce dual combo stud	S-23294	2	6.5" - 7.5" ride heights; Use with S-22510-2 air spring spacer only
	Bolt-on			
	Standard pattern	B-24813	2	5.5" & 6.5" ride heights; Standard travel
	Pattern #2	B-24812	2	5.5" & 6.5" ride heights; Standard travel
7	**AIR SPRING MOUNTING PLATE**	S-20905	2	Use with S-22510-2 air spring spacer only
8	**AIR SPRING MOUNTING KIT**			
	8a Standard travel			
	Standard dual combo stud	S-22619/2	2	5.5" - 9.0" ride height
	Rotated single combo stud	S-20033/2	2	5.5" - 9.0" ride height
	8b Limited jounce			
	Standard dual combo stud	S-22631/2	2	Use with S-22510-2 air spring spacer only
9	**AIR SPRING SPACER**	S-22510-2	2	6.5" - 7.5" ride heights; Limited jounce
10	**ALIGNMENT COLLARS**			
	10a Eccentric	S-20925	2	Alignment hole is off center
	10b Concentric	S-20924	2	Alignment hole is centered
11	**QUIK-ALIGN® PIVOT BOLT KIT**	S-24679	2	Includes: round head bolt, hardened washers & prevailing torque hex nut
12	**TRI-FUNCTIONAL® II BUSHING KIT**[3]	S-24691	2	Includes: bushing, bushing tube spacers, round head bolt, prevailing torque hex nut, hardened washers and lube
13	**BUSHING TUBE SPACER**	S-21099	4	
14	**BUSHING TUBE SPACER KIT**	S-26369	2	Includes: round head bolt, hardened washers, prevailing torque hex nut and bushing tube spacers

1. Options exist based on frame attachment, frame bracket style, bolt hole pattern and coating. Contact Hendrickson for assistance or refer to L1266 Frame Bracket Parts List.
2. Bolt-on C-channel Kits are only optional for bolt-on frame brackets; Options exist for galvanized kits.
3. Bushing tool S-21307 is required to correctly rebush the suspension.

NOTE: Identification tag can be found on the inside of the curbside beam.

CONNEX® Suspension Components

ITEM	DESCRIPTION	PART NO.	QTY.	NOTE
15	**SHOCK ABSORBER**			Reference L1287 for shock part numbers and shock straps
16	**SHOCK BOLT KIT**	S-24024	2	One (1) shock bolt kit is required per shock
17	**LOWER SHOCK BOLT KIT** (not shown)	S-23642	2	One (1) shock bolt kit is required per shock
18	**U-BOLT KIT**			
	12.25" Brakes	S-22894/4	4	Includes: (1) flattened U-bolt and hardware; axle spacer is needed with flattened U-bolt; For 12.25" brakes only
	16.50" Brakes	S-21140/4	4	Includes: (1) coined U-bolt and hardware; For 16.5" brakes only
19	**AXLE SPACER**	S-20701	4	Must order with U-Bolt Kit (item #20); For 12.25" brakes only
20	**BEAM ASSEMBLY**			
	Roadside	S-24186-1	1	
	Curbside	S-24186-2	1	

Primary Fixed Suspension System

CONNEX® ST

L1277 - Suspension Components 100

L1266 - Frame Brackets 275

L1287 - Shocks 294

L1182 - Vehicle Controls 302

L878 - Tire Pressure Control System 319

L1104 - Drum Brake Components 329

L949 - READY-TO-ROLL® Wheel-End Packages
& Air Disc Brake Components 337

CONNEX® ST Suspension Components

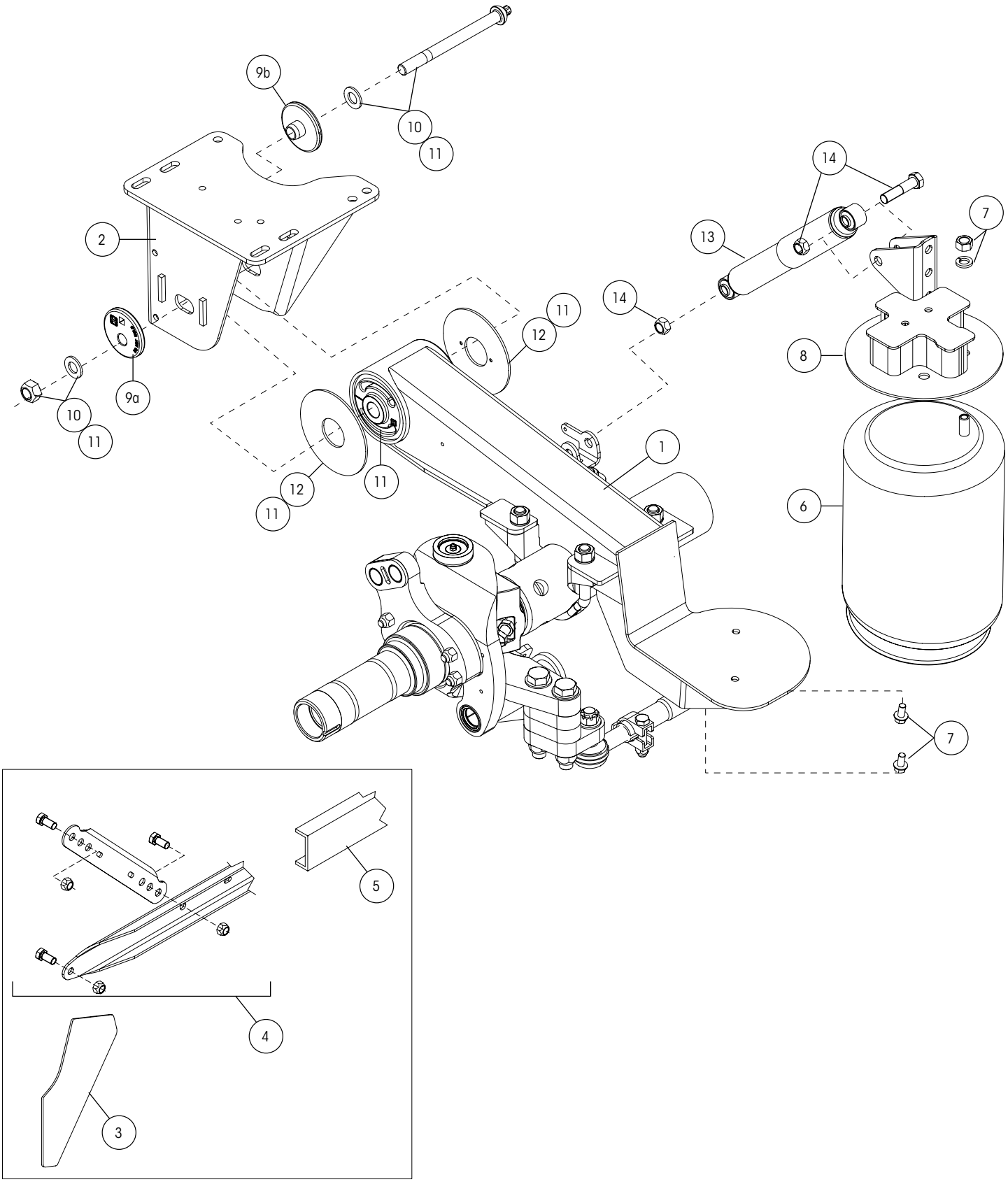

ITEM	DESCRIPTION	PART NO.	QTY.	NOTE
1	**AXLE / BEAM WELDMENT**		1	Contact Hendrickson for assistance
2	**FRAME BRACKET[1]**		2	See L1266 Frame Bracket Parts List
3	**FRAME BRACKET GUSSET**	S-27730	2	Winged Weld-On Frame Brackets only
4	**BOLT-ON C-CHANNEL KIT[2]**		1	
	28.5" beam center	S-31901-6	1	
	30.0" beam center	S-31901-7	1	
	32.5" beam center	S-31901-8	1	
	36.0" beam center	S-31901-10	1	
	36.5" beam center	S-31901-5	1	
	37.5" beam center	S-31901-11	1	
	38.5" beam center	S-31901-12	1	
	39.5" beam center	S-31901-13	1	
5	**WELD-ON C-CHANNEL**			
	28.5" - 32.5" suspension beam center	A-1631-16	1	
	32.5" - 39.5" suspension beam center	A-1631-19	1	
6	**AIR SPRING**			
	Standard	S-20124	2	
	Low Pressure	S-20127	2	
7	**AIR SPRING MOUNTING KIT**	S-20033/2	2	Includes: 2 flanged screws, 1 hex nut and 1 lock washer
8	**AIR SPRING SHOCK MOUNT**			
	BOLT-ON[3]			
	13" - 14" ride height	S-36248-L/-R	1	No spacer just .25" plate & shock mount
	15" ride height	S-36248-1L/-1R	1	1.19" spacer/plate height & shock mount
	16" ride height	S-36248-2L/-2R	1	2.19" spacer/plate height & shock mount
	17" ride height	S-36248-3L/-3R	1	3.19" spacer/plate height & shock mount
	18" ride height	S-36248-4L/-4R	1	4.19" spacer/plate height & shock mount
	19" ride height	S-36248-5L/-5R	1	5.19" spacer/plate height & shock mount
	WELD-ON			
	13" - 14" ride height	C-21216-1C/-2C	1	No spacer just .19" plate and shock mount
	15" ride height	C-21217-1C/-2C	1	1.00" spacer/plate height & shock mount
	16" ride height	C-21218-1C/-2C	1	2.00" spacer/plate height & shock mount
	17" ride height	C-21219-1C/-2C	1	3.00" spacer/plate height & shock mount
	18" ride height	C-25932-1C/-2C	1	4.00" spacer/plate height & shock mount
	19" ride height	C-21223-1C/-2C	1	5.00" spacer/plate height & shock mount
9	**ALIGNMENT COLLARS**			
	9a Eccentric	S-20925	2	Pivot bolt hole is offset from center of collar
	9b Concentric	S-20924	2	Pivot bolt hole is in center of collar
10	**QUIK-ALIGN® PIVOT BOLT KIT[4]**	S-24679	2	Includes: Bolt, hex nut and 2 hardened washers
11	**TRI-FUNCTIONAL® BUSHING KIT[5]**	S-24691	2	Includes: 1 TRI-FUNCTIONAL Bushing, 1 pivot bolt kit, 2 bushing tube spacers and lube packet
12	**BUSHING TUBE SPACERS**	S-21099	4	
13	**SHOCK ABSORBER**		2	See L1287 Shock and Shock Strap Parts List
14	**SHOCK BOLT KIT**	S-20031/2	2	One kit per shock
15	**SHOCK STRAP KIT (Not Shown)**		1	See L1287 Shock and Shock Strap Parts List

1. Options exist based on frame attachment, frame bracket style, bolt hole pattern and connection. Contact Hendrickson for assistance or refer to L1266 Frame Bracket Parts List.
2. Bolt-on c-channel struts are only optional for bolt-on frame brackets. Other options exist for galvanized or different track widths.
3. Other options exist for galvanized. Contact Hendrickson for assistance.
4. Best installed with Hendrickson's E-20 socket S-24536 (1-inch drive sleeveless), S-25119 (1-inch drive sleeve) or S-24303 (3/4-inch drive sleeveless).
5. Bushing tool S-21307 is required to correctly rebush the suspension.

NOTE: Identification tag can be found on the inside of the curbside beam.

CONNEX® ST Suspension Components

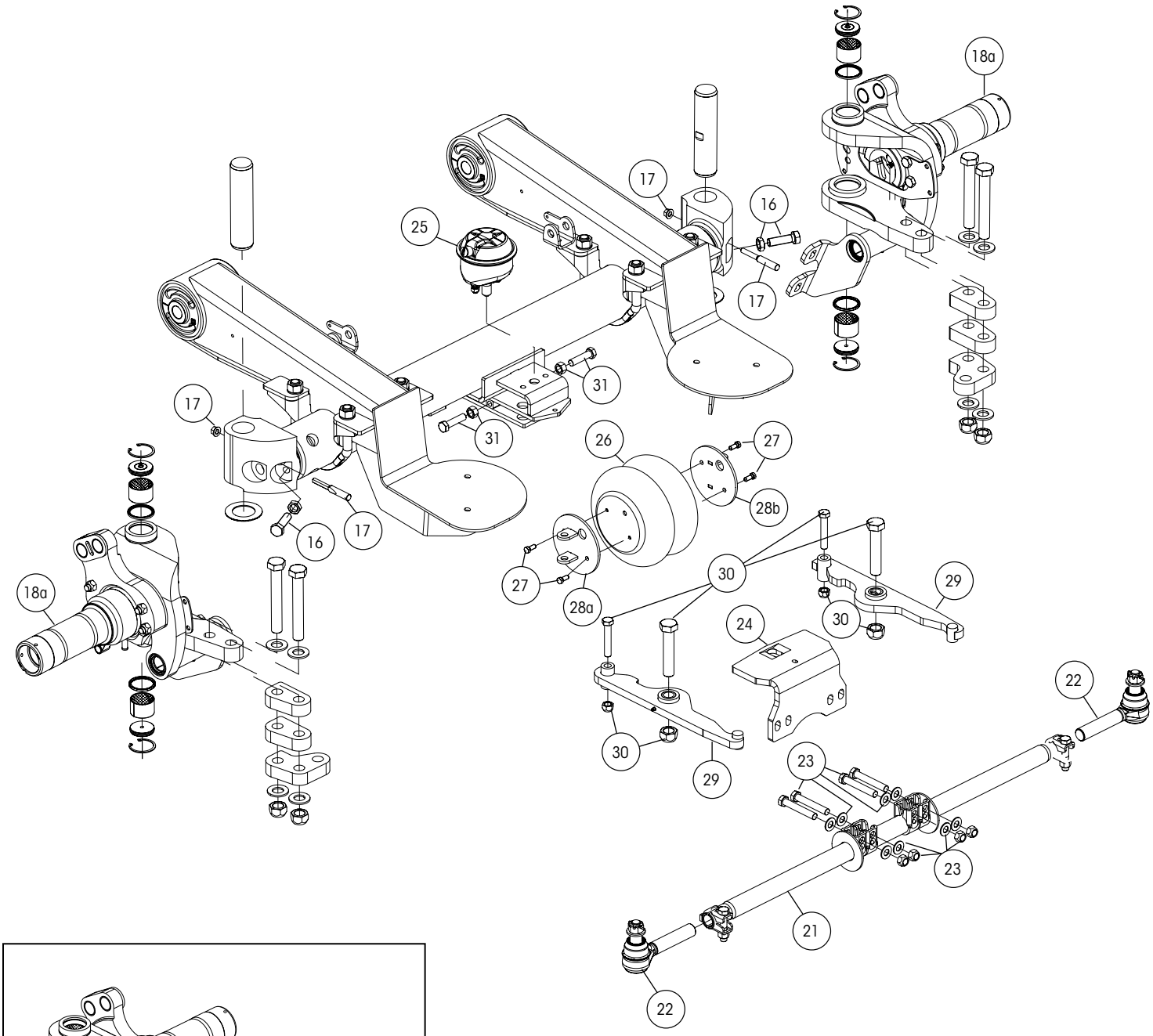

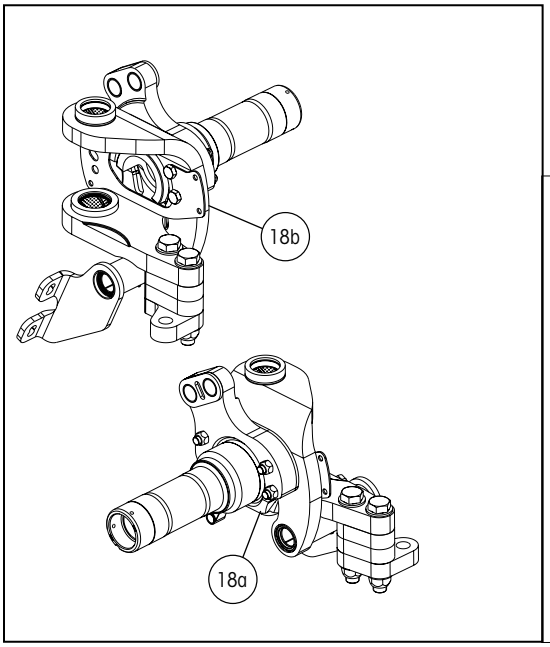

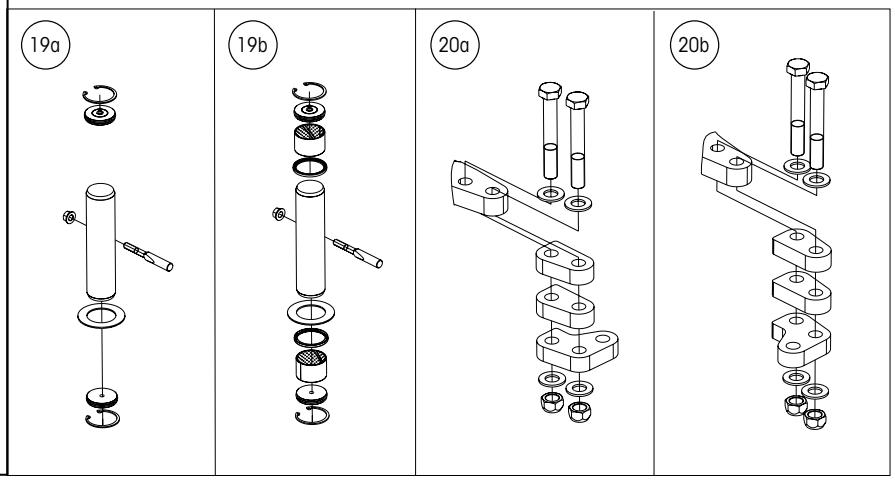

STEER AXLE COMPONENTS

ITEM	DESCRIPTION	PART NO.	QTY.	NOTE
16	**STOP BOLT KIT**	S-38970-1	2	1 kit per side
17	**DRAW KEY KIT**	S-38971-1	2	1 kit per side
18	**KNUCKLE ASSEMBLY**			
	18a Roadside	S-40342-1	1	Includes: Tie rod mount kits, bushings & seals only
	18b Curbside	S-40342-2	1	Includes: Tie rod mount kits, bushings & seals only
19	**KINGPIN KITS**			
	19a Kingpin Replacement Kit	S-38972-1	2	Includes: Draw key kit, kingpin, thrust washer, cap & retaining ring
	19b Kingpin Overhaul Kit	S-38972-10	2	Includes: Draw key kit, kingpin, thrust washer, bushings, seals, cap & retaining ring
20	**TIE ROD MOUNT KIT**			
	20a Roadside	S-38973-1L	1	Includes: Tie rod mount, spacers & hardware
	20b Curbside	S-38973-1R	1	Includes: Tie rod mount, spacers & hardware
21	**TIE ROD ASSEMBLY**			
	Axle Track 77.5 & 79.5	S-37487-2	1	Includes: Tie rod, center bracket clamps, Tie rod ends, castle nut, cotter pin & washer
	Axle Track 80.0, 81.0 & 83.5	S-37487-3	1	Includes: Tie rod, center bracket clamps, tie rod ends, castle nut, cotter pin & washer
	Axle Track 84.0, 85.0 & 86.0	S-37487-4	1	Includes: Tie rod, center bracket clamps, tie rod ends, castle nut, cotter pin & washer
22	**TIE ROD END**			
	22a Lefthand Thread	S-38081-1L	1	Includes: Tie rod end, castle nut, cotter pin and washer
	22b Righthand Thread	S-38081-1R	1	Includes: Tie rod end, castle nut, cotter pin and washer
23	**LOCK STRAIGHT CLAMP BOLT KIT**	S-38974-1	1	Includes: Bolts, washers & nuts
24	**LOCK STRAIGHT TIE ROD BRACKET**	S-33830	1	
25	**PIN LOCK CHAMBER**	S-35065	1	Includes: Bolts, washers & nuts
26	**LOCK STRAIGHT AIR SPRING**	S-8768	1	
27	**LOCK STRAIGHT AIR SPRING BOLT KIT**	S-38975-1	1	
28	**LOCK STRAIGHT AIR SPRING PLATE**			
	28a Roadside	S-33832-1	1	
	28b Curbside	S-33832-2	1	
29	**LOCK STRAIGHT ARM ASSEMBLY**	S-33829	2	Includes: Arm weldment, bushing & grease zerk
30	**LOCK STRAIGHT ARM BOLT KIT**	S-38976-1	1	
31	**LOCK STRAIGHT ARM STOP BOLT KIT**	S-38977-1	1	

NOTES

Primary Fixed Suspension System

HT® Series Top-Mount

L936 - Suspension Components 106

L38 - Suspension Components 109

L937 - Suspension Components 119

L939 - Suspension Components 125

L1266 - Frame Brackets 275

L1287 - Shocks 294

L1182 - Vehicle Controls 302

HT® Series Suspension Components

Picture shown may not resemble all models.

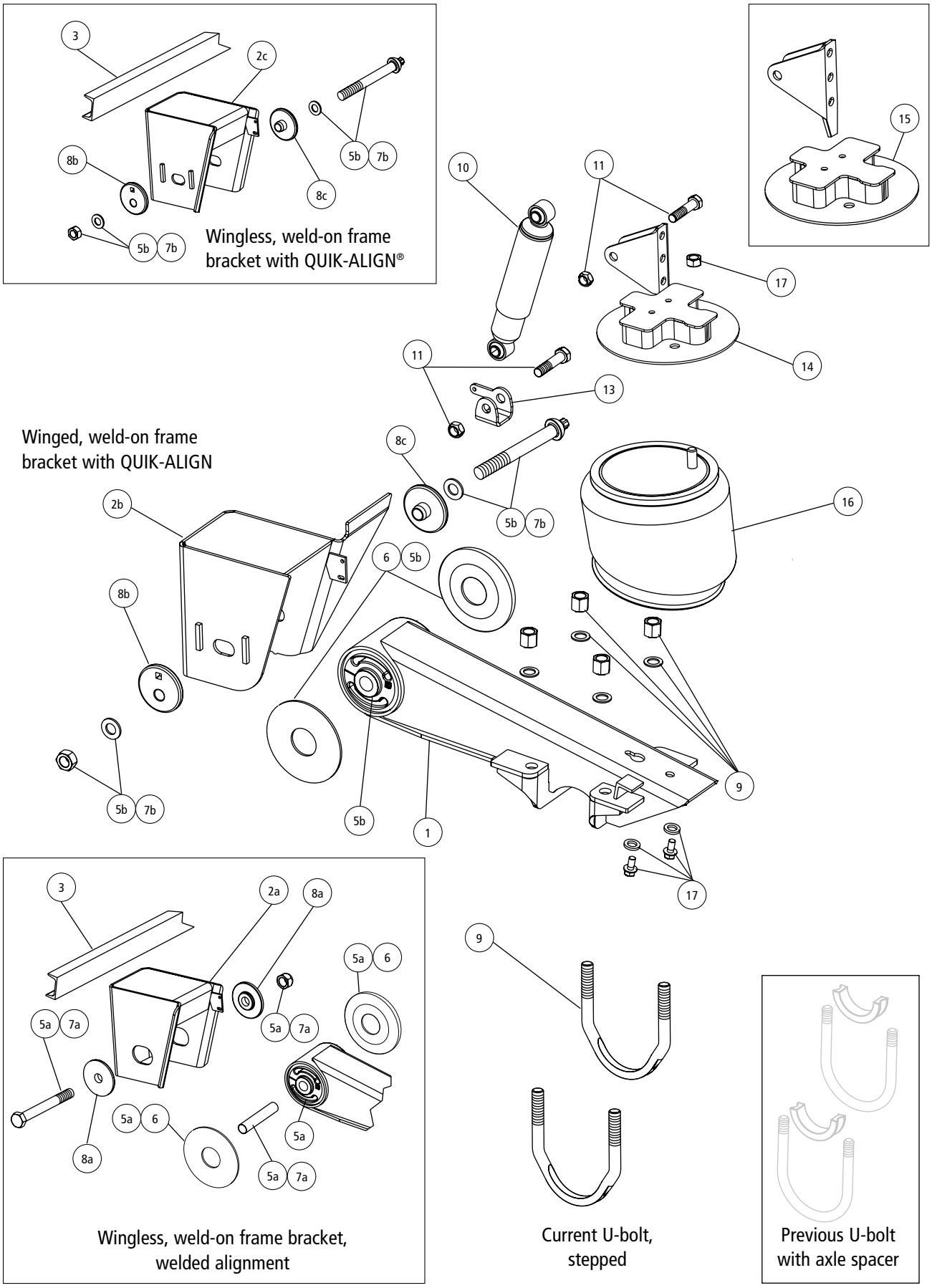

ITEM	DESCRIPTION	PART NO.	QTY. PER SUSP.	FITS MODELS HT190_?_ or N-HT190_?_		
1	**BEAM ASSEMBLY**[1]					
	Roadside	S-20000-1	1	All models		
	Curbside	S-20000-2	1	All models		
2	**FRAME BRACKET**					
	2a Wingless, Weld-on Welded Alignment					
	Roadside	S-20064-1	1	T-14-001	T-14-002	T-14-005
	Curbside	S-20064-2	1	T-14-009	T-15-001	T-15-002
				T-15-005	T-15-009	T-15-020
	Roadside	S-20065-1	1	T-16-001	T-16-002	T-16-003
	Curbside	S-20065-2	1	T-16-005	T-16-009	T-17-001
				T-17-002	T-17-005	T-17-009
	2b Winged, Weld-on QUIK-ALIGN®					
	Roadside	S-21179-1	1	TA14-001	TA14-005	TA15-005
	Curbside	S-21179-2	1			
	Roadside	S-21165-1	1	TA16-005	TA17-005	
	Curbside	S-21165-2	1			
	2c Wingless, Weld-on QUIK-ALIGN					
	Roadside	S-21590-1	1	TB14-001	TB14-005	TB14-024
	Curbside	S-21590-2	1	TB15-001	TB15-002	TB15-005
				TB15-024		
	Roadside	S-21592-1	1	TB16-001	TB16-005	TB17-005
	Curbside	S-21592-2	1			
3	**FRAME BRACKET C-CHANNEL**	A-1631-19	1	All models		
4	**FRAME BRACKET GUSSET** (Not Shown)	S-27330	2	TA14-005	TA15-005	TA16-005
				TA17-005		
5	**TRI-FUNCTIONAL® II BUSHING KIT**[2]					
	5a Welded Alignment	S-6914	2	Includes bushing, bushing tube spacers, cap screw, prevailing torque hex nut, liner and lube		
	5b QUIK-ALIGN	S-24691	2	Includes bushing, bushing tube spacers, round head bolt, prevailing torque hex nut, hardened washers and lube		
6	**BUSHING TUBE SPACER**	S-21099	4	All models		
7	**PIVOT BOLT KIT**					
	7a Welded Alignment	S-3646	2	Includes cap screw, prevailing torque hex nut and liner		
	7b QUIK-ALIGN	S-24679	2	Includes round head bolt, hardened washers and prevailing torque hex nut		
8	**ALIGNMENT COLLAR**					
	8a Welded Alignment	S-2770	4	Collars are welded to frame bracket		
	8b Eccentric, QUIK-ALIGN (outer)	S-20925	2	Alignment hole is off center		
	8c Concentric, QUIK-ALIGN (inner)	S-20924	2	Alignment hole is centered		
9	**U-BOLT KIT**	S-21140/4	4	Includes (1) stepped U-bolt and hardware Axle spacer is not needed with stepped U-bolt		

[1]Lower shock clevis (item #12) is included with beam assembly.

[2]Bushing tool S-21307 is required to correctly re-bush the suspension.

NOTE: Identification tag can be found on the front of the roadside frame bracket or the inside of the curbside beam.

HT® Series Suspension Components

ITEM	DESCRIPTION	PART NO.	QTY. PER SUSP.	FITS MODELS HT190_?_ or N-HT190_?_		
10	**SHOCK ABSORBER**	S-20001	2	All models		
11	**SHOCK BOLT KIT**	S-20031/2	2	T-14-005	T-15-005	T-16-005
				T-17-005	TA14-005	TA15-005
				TA16-005	TA17-005	TB14-005
				TB14-024	TB15-005	TB15-024
				TB16-005	TB17-005	
		S-20218/2	2	T-14-001	T-14-002	T-14-009
				T-15-001	T-15-002	T-15-009
				T-15-020	T-16-001	T-16-002
				T-16-003	T-16-009	T-17-001
				T-17-002	T-17-009	TA14-001
				TB14-001	TB15-001	TB15-002
				TB16-001		
12	**SHOCK STRAP KIT** (Not Shown)	S-14587-1	1	Includes (4) nylon ties and (2) shock straps. Use with S-20001 shocks.		
13	**LOWER SHOCK CLEVIS**[3]	S-20069	2	All models		
14	**AIR SPRING SHOCK MOUNT**[4]					
	Roadside	C-20011-1	1	T-14-005	TA14-005	TB14-005
	Curbside	C-20011-2	1	TB14-024		
	Roadside	C-20012-1	1	T-15-005	TA15-005	TB15-005
	Curbside	C-20012-2	1	TB15-024		
	Roadside	C-20013-1	1	T-16-003	T-16-005	TA16-005
	Curbside	C-20013-2	1	TB16-005		
	Roadside	C-20014-1	1	T-17-005	TA17-005	TB17-005
	Curbside	C-20014-2	1			
15	**AIR SPRING SPACER ASSEMBLY**[4]			Includes air spring plate and assembly		
		C-20016-1	2	T-15-001	T-15-002	T-15-009
				TB15-002		
		C-20016-2	2	T-16-001	T-16-002	TB16-001
				TB16-009		
		C-20016-3	2	T-17-001	T-17-002	T-17-009
16	**AIR SPRING**	S-20223	2	All models		
17	**AIR SPRING MOUNTING KIT**	S-20033/2	2	All models		
18	**UNIVERSAL HEIGHT CONTROL VALVE** (Not Shown)	VS-227	1[5]	Fits all models. Includes height control valve, exhaust line and spacer bracket.		
19	**UNIVERSAL LINKAGE ASSEMBLY** (Not Shown)	S-14187	1[5]	Includes linkage assembly and hardware		
20	**AUTO DUMP VALVE** (Not Shown)	VS-23460	1[5]	Includes dump valve and fittings		
21	**PRESSURE PROTECTION VALVE** (Not Shown)	VS-1128	1[5]	Includes valve only		

[3] Lower shock clevis is included with beam assembly (item #1).

[4] Component may vary for slider suspensions based on slider box manufacturer. Contact Hendrickson for assistance.

[5] Quantities for air control components are per trailer.

NOTE: Identification tag can be found on the front of the roadside frame bracket or the inside of the curbside beam.

Picture shown may not resemble all models.

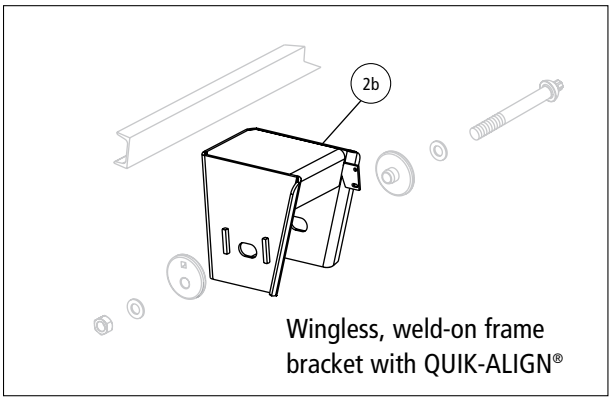

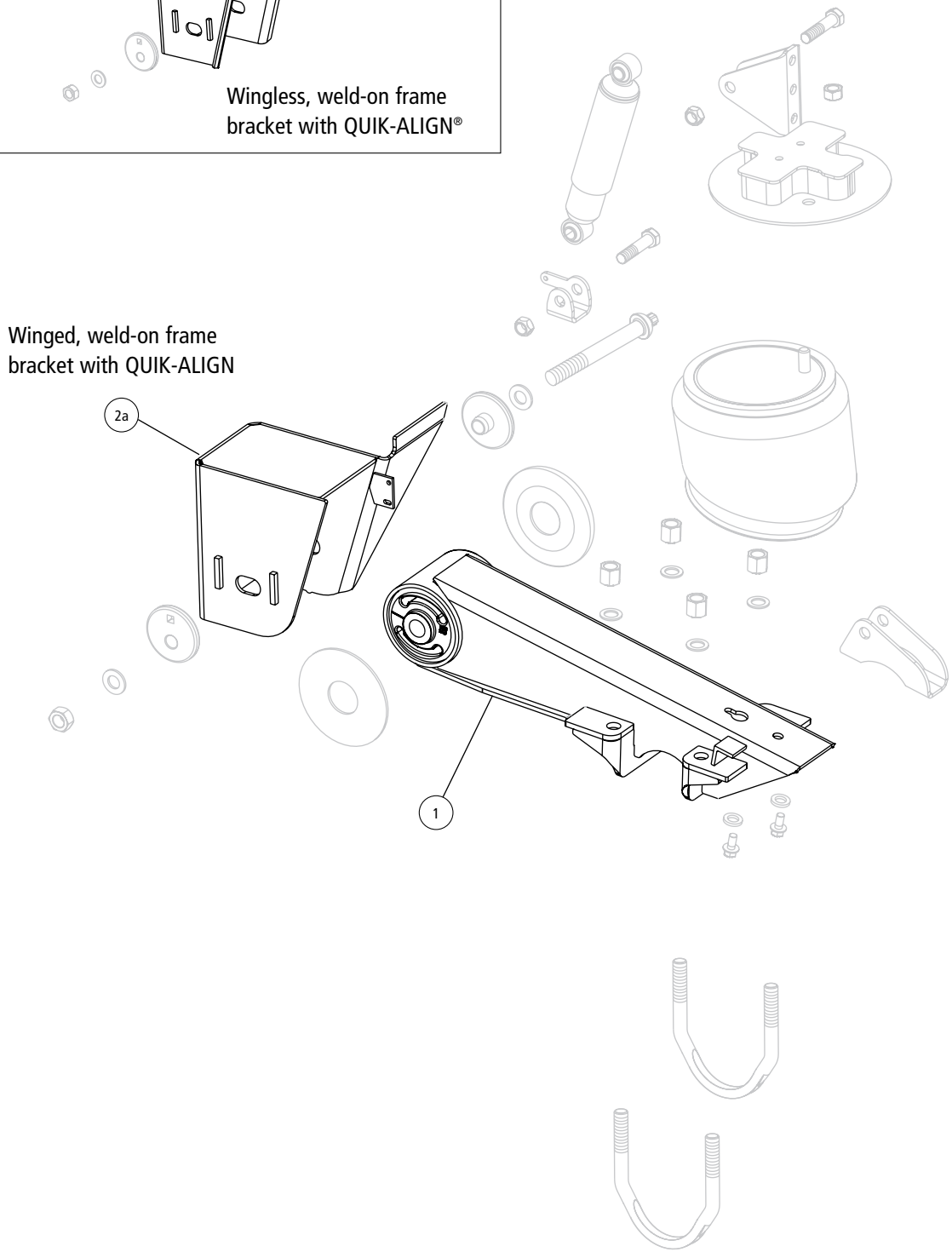

HT® Series Suspension Components

ITEM	DESCRIPTION	PART NO.	QTY. PER SUSP.	FITS MODELS HT230_?_ or N-HT230_?_		
1	**BEAM ASSEMBLY**[1]					
	Roadside	S-20000-1	1	Fits all models unless shown below		
	Curbside	S-20000-2	1			
	Roadside	S-21736-1	1	TA14-601	TB14-601	
	Curbside	S-21736-2	1			
	Roadside	S-27614-1	1	TA15-522	TA17-522	
	Curbside	S-27614-2	1			
2	**FRAME BRACKET**					
	2a Winged, Weld-on, QUIK-ALIGN®					
	Roadside	S-21165-1	1	TA15-525	TA16-001	TA16-004
	Curbside	S-21165-2	1	TA16-007	TA17-001	TA17-003
				TA17-007	TA17-013	TA17-026
				TA17-517	TA17-522	
	Roadside	S-21179-1	1	TA14-001	TA14-004	TA14-007
	Curbside	S-21179-2	1	TA14-020	TA14-021	TA14-520
				TA14-601	TA14-701	TA15-001
				TA15-003	TA15-007	TA15-009
				TA15-012	TA15-016	TA15-018
				TA15-026	TA15-517	TA15-522
				TA15-523	TA15-524	TA15-601
				TA15-701		
	Roadside	S-21179-3	1	TA15-016		
	Curbside	S-21179-4	1			
	Roadside	S-21193-1	1	TA19-001		
	Curbside	S-21193-2	1			
	Roadside	S-21249-1	1	TA14-008	TA15-008	TA15-025
	Curbside	S-21249-2	1			
	Roadside	S-21250-1	1	TA17-008		
	Curbside	S-21250-2	1			
	2b Wingless, Weld-on, QUIK-ALIGN					
	Roadside	S-21590-1	1	TB14-001	TB14-021	TB14-022
	Curbside	S-21590-2	1	TB14-024	TB14-701	TB15-001
				TB15-003	TB15-009	TB15-020
				TB15-026	TB15-027	TB15-028
	Roadside	S-21592-1	1	TB14-033	TB16-001	TB16-004
	Curbside	S-21592-2	1	TB16-024	TB16-026	TB17-001
				TB17-003	TB17-009	TB17-024
				TB17-026		
	Roadside	S-22420-1	1	TB15-025		
	Curbside	S-22420-2	1			
	Roadside	S-23461-1	1	TB19-001		
	Curbside	S-23461-2	1			
	2c Winged, Bolt-on, QUIK-ALIGN (Not Shown)					
	Roadside	S-21204-1	1	TA14-002	TA15-002	TA15-004
	Curbside	S-21204-2	1	TA15-011		
	Roadside	S-21205-1	1	TA16-002	TA17-002	
	Curbside	S-21205-2	1			
	Roadside	S-21332-1	1	-18-052		
	Curbside	S-21332-2	1			
	Roadside	S-25812-1	1	TA14-070	TA15-071	TB14-070
	Curbside	S-25812-2	1			
	Roadside	S-24912-1	1	TA15-036		
	Curbside	S-24912-2	1			

1. Lower shock clevis (item #13) is included with beam assembly.

NOTE: Identification tag can be found on the front of the roadside frame bracket or the inside of the curbside beam.

Picture shown may not resemble all models.

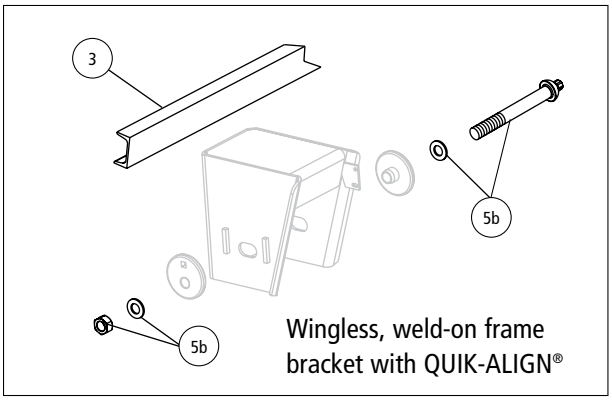

Wingless, weld-on frame bracket with QUIK-ALIGN®

Winged, weld-on frame bracket with QUIK-ALIGN

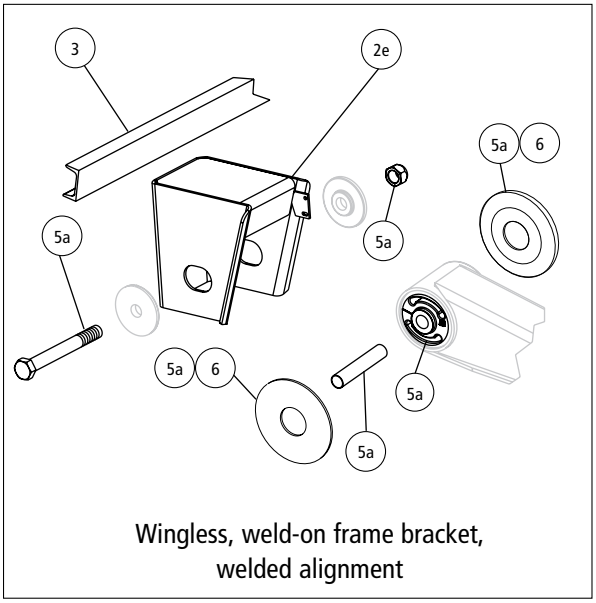

Wingless, weld-on frame bracket, welded alignment

HT® Series Suspension Components

ITEM	DESCRIPTION	PART NO.	QTY. PER SUSP.	FITS MODELS HT230_?_ or N-HT230_?_		
	2d Wingless, Bolt-on, QUIK-ALIGN® (Not Shown)					
	Roadside	S-22137-1	1	TB14-002	TB15-002	
	Curbside	S-22137-2	1			
	Roadside	S-22138-1	1	TB16-002	TB17-002	TB18-002
	Curbside	S-22138-2	1			
	Roadside	S-25494-1	1	TB14-071	TB15-071	
	Curbside	S-25494-2	1			
	2e Wingless, Weld-on, Welded Alignment					
	Roadside	S-20047-1	1	-14-008	-15-008	-15-025
	Curbside	S-20047-2	1			
	Roadside	C-20048-1	1	-16-008	-17-008	
	Curbside	C-20048-2	1			
	Roadside	S-20064-1	1	-14-001	-14-004	-14-005
	Curbside	S-20064-2	1	-14-007	-14-017	-14-020
				-14-021	-14-024	-15-001
				-15-003	-15-005	-15-006
				-15-007	-15-009	-15-012
				-15-017	-15-020	-15-026
				-15-027	-15-028	-15-517
	Roadside	S-20065-1	1	-16-001	-16-004	-16-005
	Curbside	S-20065-2	1	-16-006	-16-007	-16-009
				-16-024	-16-026	-17-001
				-17-003	-17-005	-17-006
				-17-007	-17-009	-17-012
				-17-017	-17-022	-17-023
				-17-024	-17-026	-17-517
	Roadside	S-14190-1	1	-19-001	-19-027	
	Curbside	S-14190-2	1			
	2f Wingless, Bolt-on, Welded Alignment (Not Shown)					
	Roadside	S-20007-1	1	-14-002	-14-011	-15-002
	Curbside	S-20007-2	1	-15-004	-15-011	-15-032
				-16-021		
	Roadside	S-20008-1	1	-16-002	-16-010	-17-002
	Curbside	S-20008-2	1	-17-004	-17-011	-17-032
	Roadside	S-20190-1	1	-19-004		
	Curbside	S-20190-2	1			
	Roadside	S-20396-1	1	-19-002		
	Curbside	S-20396-2	1			
3	**FRAME BRACKET C-CHANNEL**	A-1631-19	1	Used on all wingless frame brackets and with 19" winged frame brackets		
4	**FRAME BRACKET GUSSET** (Not Shown)	S-27330	2	Used on most winged frame brackets excluding 19" ride height		
5	**TRI-FUNCTIONAL® II BUSHING KIT**[2]					
	5a Welded Alignment	S-6914	2	Includes bushing, bushing tube spacers, cap screw, prevailing torque hex nut, liner and lube		
	5b QUIK-ALIGN	S-24691	2	Includes bushing, bushing tube spacers, round head bolt, prevailing torque hex nut, hardened washers and lube		
6	**BUSHING TUBE SPACER**	S-21099	4	All models		

2. Bushing tool S-21307 is required to correctly re-bush the suspension.

NOTE: Identification tag can be found on the front of the roadside frame bracket or the inside of the curbside beam.

Picture shown may not resemble all models.

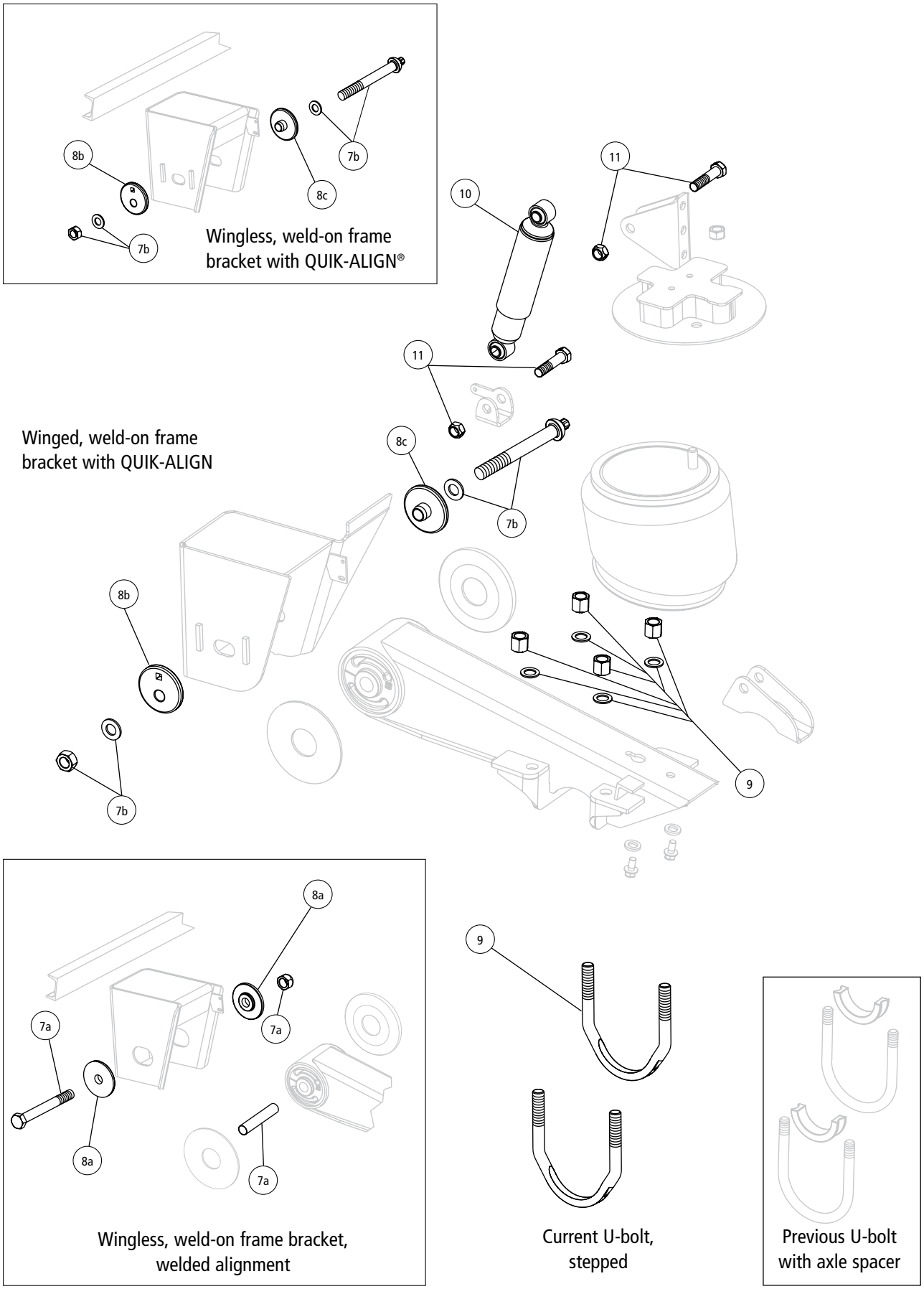

ITEM	DESCRIPTION	PART NO.	QTY. PER SUSP.	FITS MODELS HT230_?_ or N-HT230_?_		
7	**PIVOT BOLT KIT**					
	7a Welded Alignment	S-3646	2	Includes cap screw, prevailing torque hex nut and liner		
	7b QUIK-ALIGN®	S-24679	2	Includes round head bolt, hardened washers and prevailing torque hex nut		
8	**ALIGNMENT COLLARS**					
	8a Welded Alignment	S-2770	4	Collars are welded to frame bracket		
	8b Eccentric, QUIK-ALIGN (outer)	S-20925	2	Alignment hole is off center		
	8c Concentric, QUIK-ALIGN (inner)	S-20924	2	Alignment hole is centered		
9	**U-BOLT KIT**	S-21140 / 4	4	Includes (1) stepped U-bolt and hardware. Axle spacer is not needed with stepped U-bolt.		
10	**SHOCK ABSORBER**	S-20002	2	All models except below		
		S-2160	2	-14-007	-14-011	-14-032
				-15-007	-15-011	-15-012
				-15-028	-15-032	-16-007
				-17-007	-17-011	-17-012
				-17-032	TA14-007	TA15-007
				TA15-011	TA15-012	TA16-007
				TA17-007	TB14-033	TB15-028
		S-20126	2	-14-017	-15-017	-15-517
				-17-017	-17-517	TA14-520
				TA15-517	TA17-517	
		S-2212	2	-14-020	-14-021	TA14-021
				TB14-021		
		B-23361	2	TA14-020		
		S-21699	2	TA15-522	TA15-524	TA15-525
				TA17-522		
		S-2218	2	-16-021		
11	**SHOCK BOLT KIT**					
	Standard HT Application	S-20031 / 2	2	Fits all models unless shown below		
	Customer Supplied Slider Application	S-20218 / 2	2	-14-003	-14-004	-15-009
				-15-010	-15-013	-15-020
				-16-003	-16-004	-17-009
				-17-010	-17-022	TA15-009
				TB14-003	TB14-601	TB15-009
				TB15-010	TB15-020	TB16-003
				TB16-004	TB17-009	TB17-010
	Customer Located Remote Shock	S-2157 / 2	2	-14-007	-14-011	-14-020
				-14-021	-14-032	-15-007
				-15-011	-15-012	-15-028
				-15-032	-16-007	-16-021
				-17-007	-17-011	-17-012
				-17-032	TA14-007	TA14-021
				TA15-007	TA15-011	TA15-012
				TA16-007	TA17-007	TB14-021
				TB14-033	TB15-028	
		S-27615/2	1	TA15-522	TA15-524	TA15-525
				TA16-522	TA17-522	

NOTE: Identification tag can be found on the front of the roadside frame bracket or the inside of the curbside beam.

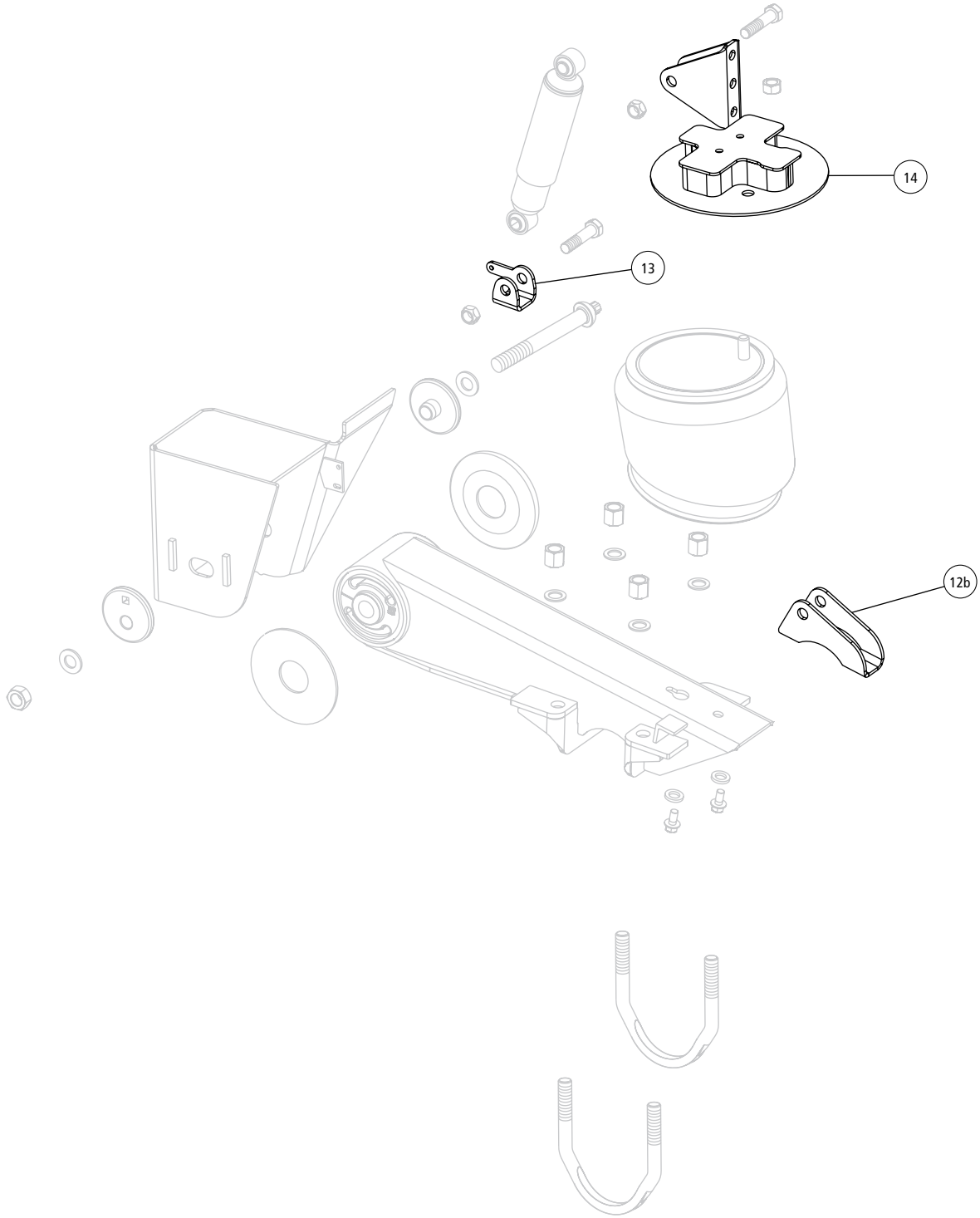
14
13
12b

ITEM	DESCRIPTION	PART NO.	QTY. PER SUSP.	FITS MODELS HT230_?_ or N-HT230_?_		
12	**REMOTE SHOCK MOUNT**					
	12a Upper Assembly (Not Shown)	S-2592	2	-14-007	-15-007	-15-012
				-15-028	-16-007	-17-007
				-17-012	TA14-007	TA15-007
				TA15-012	TA16-007	TA17-007
				TB14-033	TB15-028	
		S-9002	2	-14-011	-14-032	-15-011
				-15-032	-17-011	-17-032
				TA15-011		
		S-20023	2	-15-025	TA15-025	TB14-022
				TB15-025		
		B-20610	2	-16-021		
	12b Lower Assembly	S-2723	2	-14-007	-14-011	-14-032
				-15-007	-15-011	-15-012
				-15-028	-15-032	-16-007
				-16-021	-17-007	-17-011
				-17-012	-17-032	TA14-007
				TA15-007	TA15-011	TA15-012
				TA16-007	TA17-007	TB14-033
				TB15-028		
13	**LOWER SHOCK CLEVIS**[3]	S-20069	2	All models		
14	**AIR SPRING SHOCK MOUNT**[4]			Includes air spring plate, spacer assembly and upper shock bracket		
	Roadside	C-20011-1	1	-14-001	-14-005	-14-017
	Curbside	C-20011-2	1	-14-024	-15-003	-15-006
				-15-027	-19-027	TA14-020
				TA14-520	TA14-601	TA15-003
				TA15-016	TB14-001	TB14-024
				TB14-071	TB14-701	TB15-003
				TB15-027	TB15-071	
	Roadside	C-20012-1	1	-15-001	-15-005	-15-017
	Curbside	C-20012-2	1	-15-517	-16-006	-16-009
				TA15-001	TA15-517	TA15-522
				TA15-701	TB15-001	
	Roadside	C-20013-1	1	-16-001	-16-005	-16-024
	Curbside	C-20013-2	1	-17-003	-17-005	TA16-001
				TA17-003	TB16-001	TB16-024
				TB17-003		
	Roadside	C-20014-1	1	-17-001	-17-006	-17-017
	Curbside	C-20014-2	1	-17-023	-17-024	-17-517
				TA17-001	TA17-013	TA17-517
				TA17-522	TB17-001	TB17-024
	Roadside	C-20015-1	1	-14-002	-14-008	-15-004
	Curbside	C-20015-2	1	TA14-002	TA14-008	TA14-070
				TA15-004	TA15-071	TB14-002
	Roadside and Curbside	C-20016-1	2	-15-007	-15-009	TA15-007
				TA15-009	TB15-009	
	Roadside and Curbside	C-20016-2	2	-16-004	-16-007	-17-012
				-17-022	TA16-004	TA16-007
				TB16-004		
	Roadside and Curbside	C-20016-3	2	-17-007	-17-009	TA17-007
				TB17-009		

3. Lower shock clevis is included with beam assembly (item #1).
4. Component may vary for slider suspensions based on slider box manufacturer. Contact Hendrickson for assistance.

NOTE: Identification tag can be found on the front of the roadside frame bracket or the inside of the curbside beam.

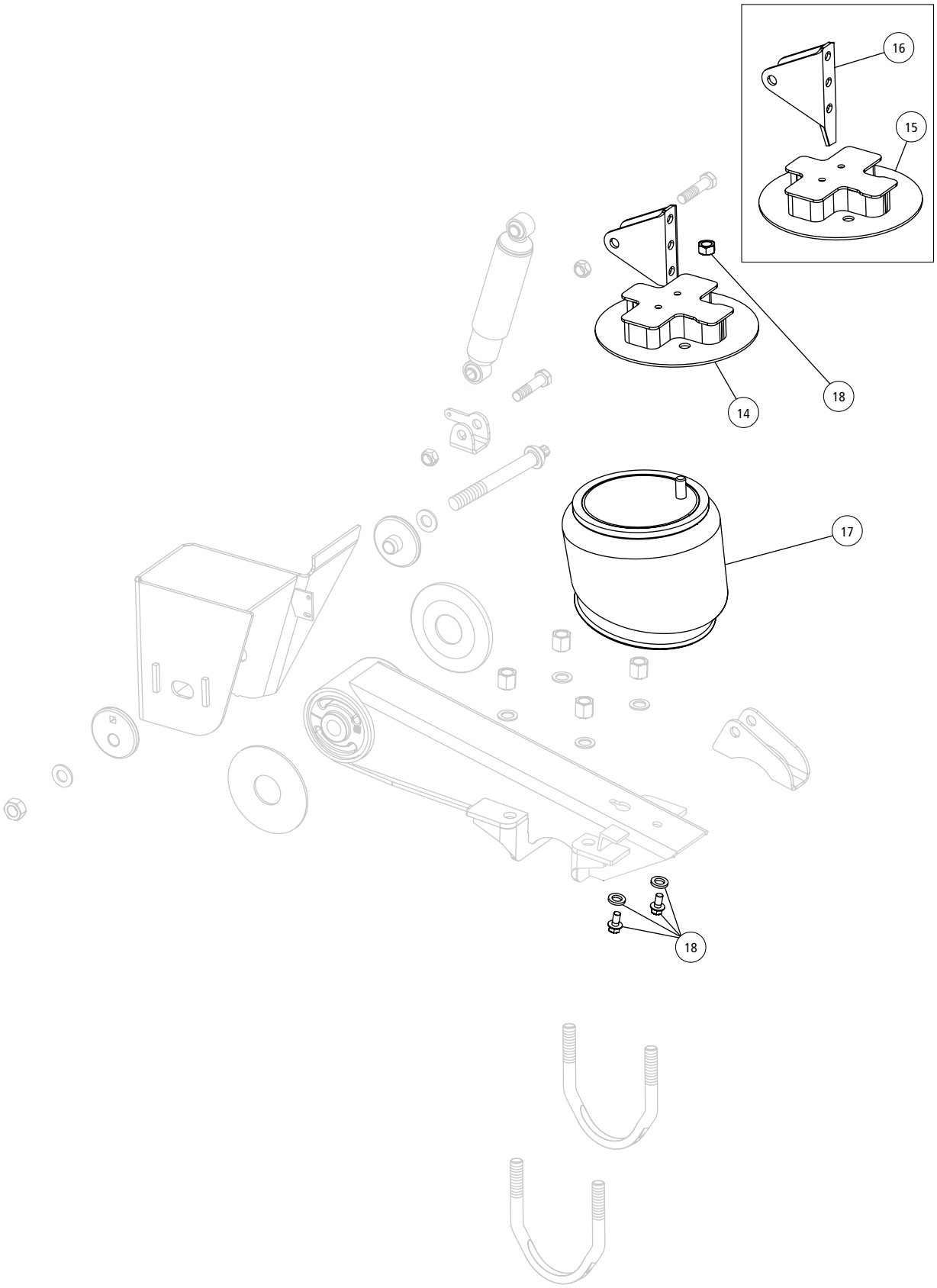
16
15
14
18
17
18

ITEM	DESCRIPTION	PART NO.	QTY PER SUSP.	FITS MODELS HT230_?_ or N-HT230_?_		
14	**AIR SPRING SHOCK MOUNT**[4] **(continued from page 9)**			Includes air spring plate, spacer assembly and upper shock bracket		
	Roadside	C-20040-1	1	-15-002	-15-008	-16-010
	Curbside	C-20040-2	1	-19-002	TA15-002	TA15-008
				TA15-026	TA15-036	TB15-002
				TB15-026		
	Roadside	C-20041-1	1	-16-002	-16-008	-16-026
	Curbside	C-20041-2	1	-17-004	TA16-002	TB16-002
				TB16-026		
	Roadside	C-20042-1	1	-17-002	-17-008	-17-026
	Curbside	C-20042-2	1	-19-004	TA17-002	TA17-008
				TA17-026	TB17-002	TB17-026
				TB18-002		
	Roadside	C-20401-1	1	-19-001	TA19-001	TB19-001
	Curbside	C-20401-2	1			
	Roadside	C-21195-1	1	-18-051		
	Curbside	C-21195-2	1			
	Roadside	C-21405-1	1	-18-052		
	Curbside	C-21405-2	1			
	Roadside and Curbside	C-20043-1	2	-15-032		
15	**AIR SPRING SPACER ASSEMBLY**[4]	C-20016-1	2	-15-007	-15-009	TA15-007
				TA15-009	TB15-009	
		B-20037	2	14-007	14-020	14-021
				15-012	15-028	-16-021
				TA14-007	TA14-021	TA15-012
				TB14-033	TB15-028	
16	**UPPER SHOCK BRACKET**	S-20023	2	-15-025	TA15-025	TB14-022
				TB15-025		
17	**AIR SPRING**	S-20010	2	All models except below		
		S-21208	2	TA14-520	TA15-522	TA15-523
				TA15-524	TA17-522	
		S-26773	2	TA15-525		
18	**AIR SPRING MOUNTING KIT**	S-20033/2	2	All models except below		
		A-21251		TA14-520	TA15-522	TA15-523
				TA17-522		
		S-22907	1	TA15-525		
19	**AIR SPRING MOUNTING PLATE** (Not Shown)	S-20905	2	TA15-525		
		S-21258	2	TB14-022		
20	**HEIGHT CONTROL VALVE** (Not Shown)	VS-227	1[5]	Fits all models. Includes height control valve, exhaust line and spacer bracket		
21	**LINKAGE ASSEMBLY** (Not Shown)	S-14187	1[5]	Includes linkage valve assembly and hardware		
22	**AUTO DUMP VALVE** (Not Shown)	VS-23460	1[5]	Includes dump and fittings		
23	**PRESSURE PROTECTION VALVE** (Not Shown)	VS-1128	1[5]	Includes valve only		

4. Component may vary for slider suspensions based on slider box manufacturer. Contact Hendrickson for assistance.

5. Quantities for air control components per trailer.

NOTE: Identification tag can be found on the front of the roadside frame bracket or the inside of the curbside beam.

Picture shown may not resemble all models.

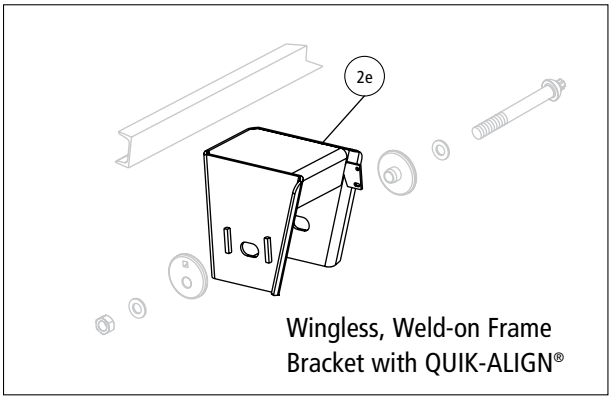

Wingless, Weld-on Frame Bracket with QUIK-ALIGN®

Winged, Weld-on Frame Bracket with QUIK-ALIGN

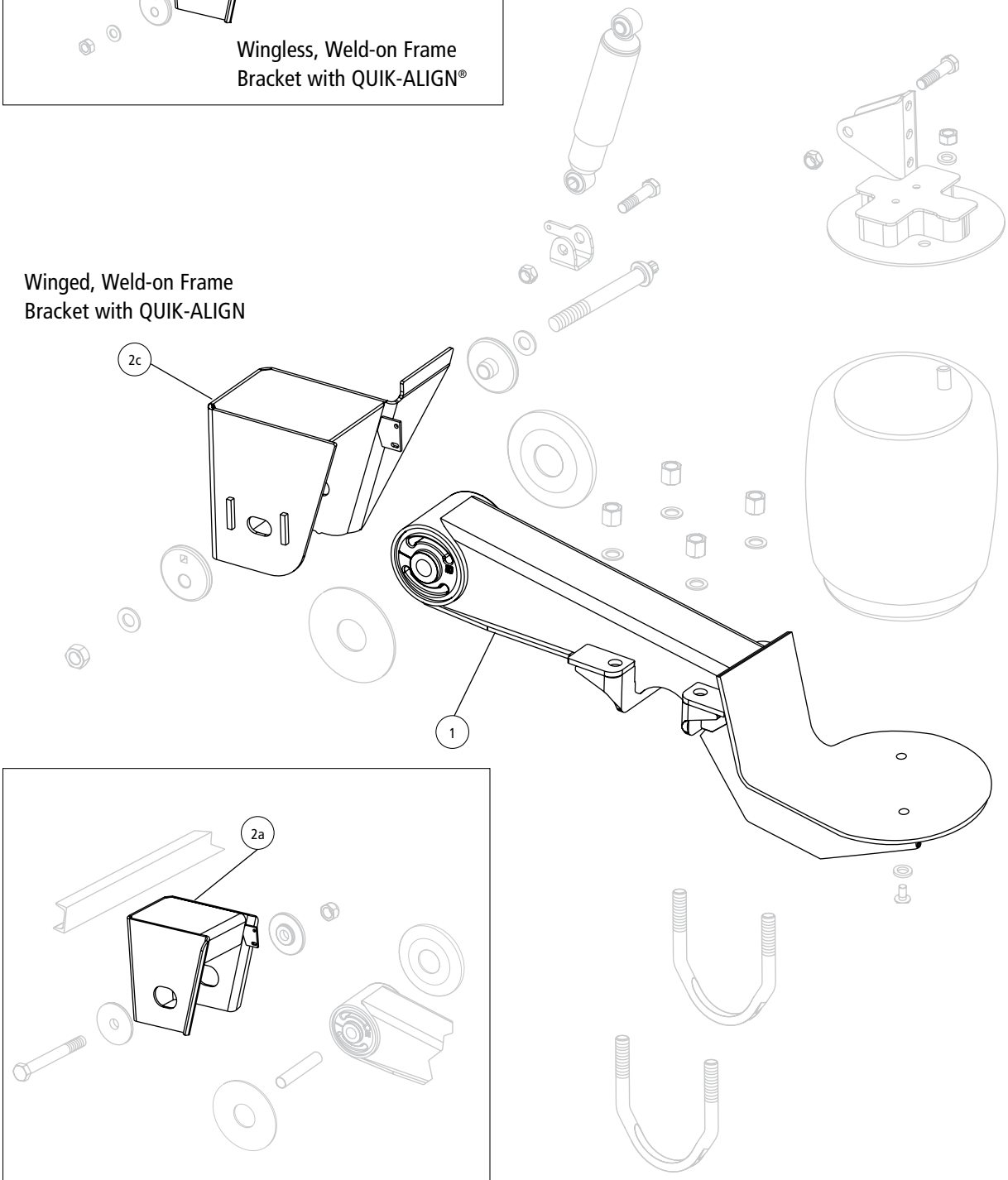

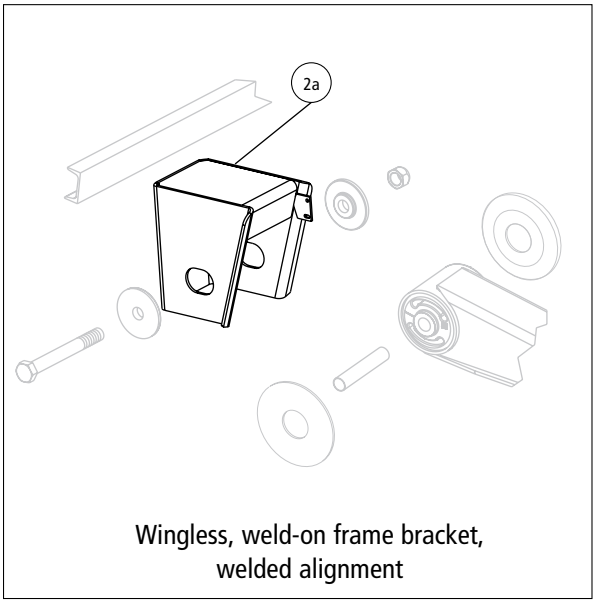

Wingless, weld-on frame bracket, welded alignment

HT® Series Suspension Components

ITEM	DESCRIPTION	PART NO.	QTY. PER SUSP.	FITS MODELS HT250_?_ or N-HT250_?_		
1	**BEAM ASSEMBLY**[1]					
	Roadside	S-20602-1	1	All models		
	Curbside	S-20602-2	1	All models		
2	**FRAME BRACKET**					
	2a **Wingless, Weld-on, Welded Alignment**					
	Roadside	S-20064-1	1	T-12-001	T-12-003	T-12-006
	Curbside	S-20064-2	1	T-12-020	T-14-001	T-14-003
				T-14-006	T-14-021	T-15-001
				T-15-006	T-15-021	-15-022
			T-15-023	T-15-026		
	Roadside	S-20065-1	1	T-16-001	T-16-003	T-16-006
	Curbside	S-20065-2	1	T-16-021	T-16-022	T-17-001
			T-17-006	T-17-020	T-17-021	
		T-17-022	T-17-023	T-17-501		
	Roadside	S-14190-1	1	T-19-001		
	Curbside	S-14190-2	1			
	Roadside	C-21040-1	1	T-16-016		
	Curbside	C-21040-2	1			
	2b **Wingless, Bolt-on, Welded Alignment** (Not Shown)					
	Roadside	S-20008-1	1	T-16-002	T-17-002	
	Curbside	S-20008-2	1			
	Roadside	S-20396-1	1	T-19-002	T-19-004	
	Curbside	S-20396-2	1			
	Roadside	S-20007-1	1	T-12-002	T-14-002	T-15-002
	Curbside	S-20007-2	1			
	Roadside	S-20047-1	1[2]	T-15-025		
	Curbside	S-20047-2	1[2]			
	2c **Winged, Weld-on, QUIK-ALIGN®**					
	Roadside	S-21193-1	1	TA19-001		
	Curbside	S-21193-2	1			
	Roadside	S-21179-1	1	TA12-001	TA14-001	TA14-021
	Curbside	S-21179-2	1	TA15-001	TA15-021	
	Roadside	S-21165-1	1	TA16-001	TA16-021	TA17-001
	Curbside	S-21165-2	1	TA17-020	TA17-021	
	Roadside	S-21179-3	1	TA14-016		
	Curbside	S-21179-4	1			
	2d **Winged, Bolt-on, QUIK-ALIGN** (Not Shown)					
	Roadside	S-21204-1	1	TA12-002	TA14-002	TA15-002
	Curbside	S-21204-2	1			
	Roadside	S-21205-1	1	TA16-002	TA17-002	
	Curbside	S-21205-2	1			
	Roadside	S-25812-1	1	TA14-070		
	Curbside	S-25812-2	1			

[1] Lower shock clevis (item # 11) is included with beam assembly.

[2] Trailer manufacturer or OEM supplied bolt-on mounting plate.

Picture shown may not resemble all models.

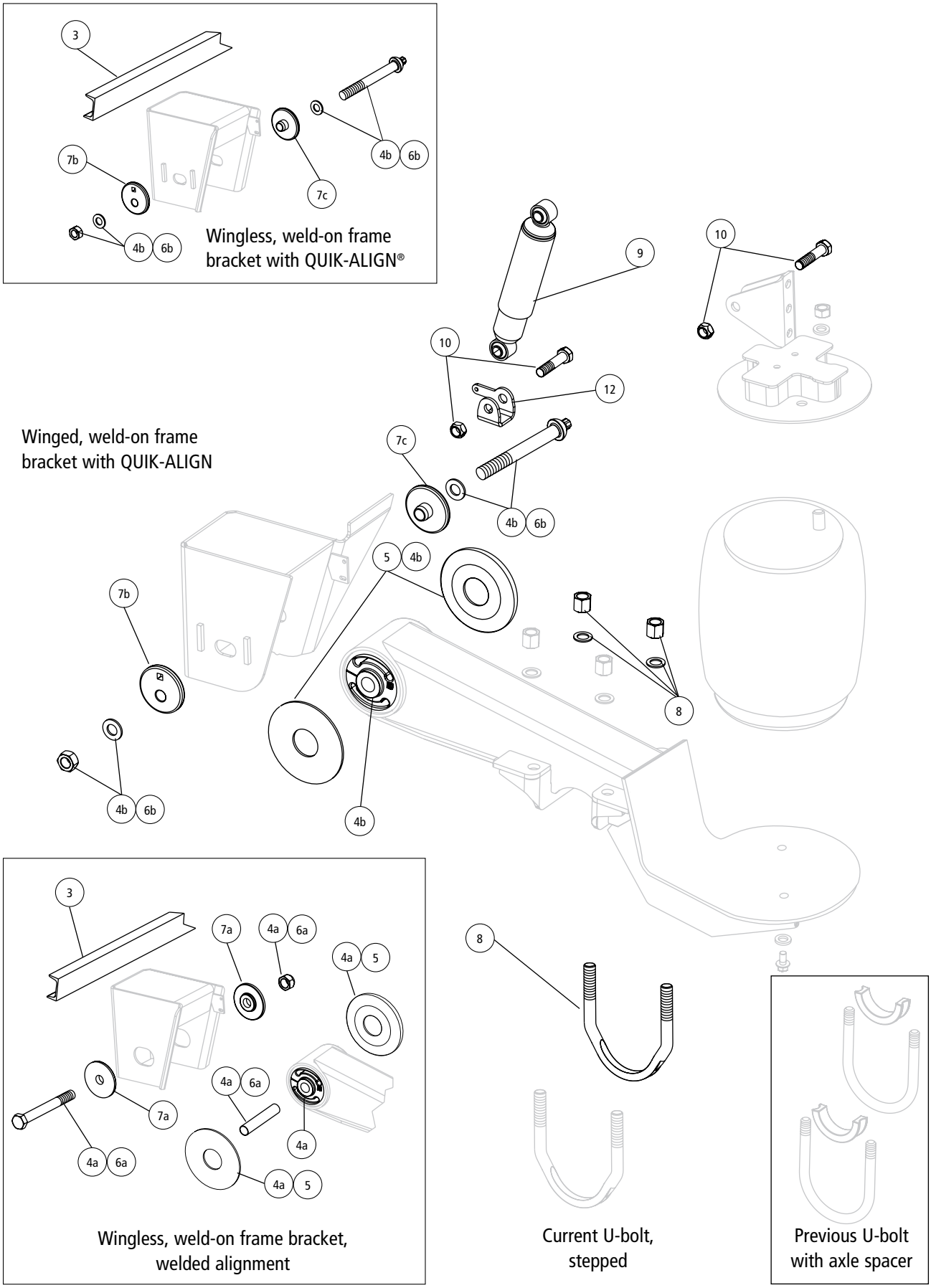

HT® Series Suspension Components

ITEM	DESCRIPTION	PART NO.	QTY. PER SUSP.	FITS MODELS HT250_?_ or N-HT250_?_		
	2e Wingless, Weld-on, QUIK-ALIGN®					
	Roadside	S-21590-1	1	TB12-001	TB12-003	TB12-024
	Curbside	S-21590-2	1	TB12-029	TB14-001	TB14-003
				TB14-015	TB14-021	TB14-022
				TB14-024	TB15-001	TB15-021
				TB15-023	TB15-024	TB15-025
				TB15-026		
	Roadside	S-21592-1	1	TB16-001	TB16-020	TB16-021
	Curbside	S-21592-2	1	TB16-022	TB16-023	TB16-024
				TB16-026	TB17-001	TB17-020
				TB17-021	TB17-024	TB17-026
				TB17-027	TB17-028	
	Roadside	S-23461-1	1	TB19-001		
	Curbside	S-23461-2	1			
	2f Wingless, Bolt-on, QUIK-ALIGN (Not Shown)					
	Roadside	S-22137-1	1	TB12-002		
	Curbside	S-22137-2	1			
	Roadside	S-25494-1	1	TB14-071		
	Curbside	S-25494-2	1			
	Roadside	S-25109-1	1	TB15-036		
	Curbside	S-25109-2	1			
3	**FRAME BRACKET C-CHANNEL**	A-1631-19	1	All models		
4	**TRI-FUNCTIONAL® II BUSHING KIT**[3]					
	4a Welded Alignment	S-6914	2	Includes bushing, bushing tube spacers,cap screw, prevailing torque hex nut, liner and lube		
	4b QUIK-ALIGN	S-24691	2	Includes bushing, bushing tube spacers, round head bolt, prevailing torque hex nut, hardened washers and lube		
5	**BUSHING TUBE SPACER**	S-21099	4	All models		
6	**PIVOT BOLT KIT**					
	6a Welded Alignment	S-3646	2	Includes cap screw, prevailing torque hex nut and liner		
	6b QUIK-ALIGN	S-24679	2	Includes round head bolt, hardened washers and prevailing torque hex nut		
7	**ALIGNMENT COLLARS**					
	7a Welded Alignment	S-2770	4	Collars are welded to frame bracket		
	7b Eccentric QUIK-ALIGN (outer)	S-20925	2	Alignment hole is off center		
	7c Concentric QUIK-ALIGN (inner)	S-20924	2	Alignment hole is centered		
8	**U-BOLT KIT**	S-21140 / 4	4	Includes (1) stepped U-bolt and hardware. Axle spacer is not needed with stepped U-bolt.		
9	**SHOCK ABSORBER**	S-2212	2	All models		
10	**SHOCK BOLT KIT**	S-20031 / 2	2	All models		
11	**SHOCK STRAP KIT** (Not Shown)	S-14587-3	1	Includes (4) nylon ties and (2) shock straps Use with S-2212 shock		
12	**LOWER SHOCK CLEVIS**[4]	S-20069	2	All models		

[3] Bushing tool S-21307 is required to correctly re-bush the suspension.

[4] Lower shock clevis is included with beam assembly (item # 1).

NOTE: Identification tag can be found on the front of the roadside frame bracket or the inside of the curbside beam.

Picture shown may not resemble all models.

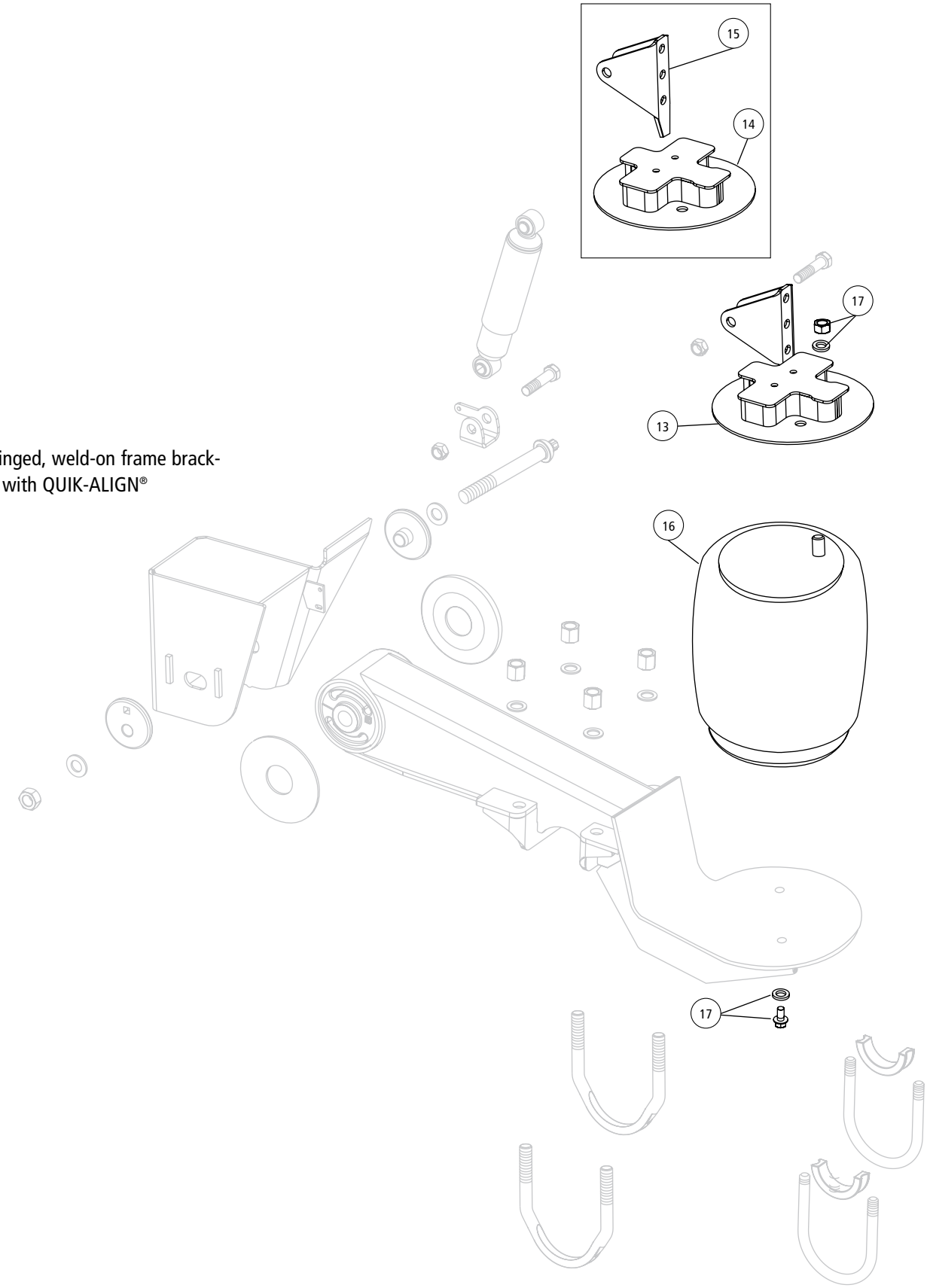

Winged, weld-on frame bracket with QUIK-ALIGN®

HT® Series Suspension Components

ITEM	DESCRIPTION		PART NO.	QTY. PER SUSP.	FITS MODELS HT250_?_ or N-HT250_?_		
13	AIR SPRING SHOCK MOUNT[5]						
		Roadside	C-21212-1	1	T-12-002	T-14-002	TA12-002
		Curbside	C-21212-2	1	TA14-002	TA14-070	TB12-002
					TB14-071	TC14-060	
		Roadside	C-21213-1	1	T-19-002	TC19-061	
		Curbside	C-21213-2	1			
		Roadside	C-21214-1	1	T-19-004		
		Curbside	C-21214-2	1			
		Roadside	C-21216-1	1	T-12-001	T-12-006	T-14-001
		Curbside	C-21216-2	1	T-14-006	TA12-001	TA14-001
					TB12-001	TB12-024	TB14-001
					TB14-022	TB14-024	TB14-071
		Roadside	C-21217-1	1	T-13-021	T-15-001	T-15-006
		Curbside	C-21217-2	1	TA15-001	TB15-001	TB15-024
					TB15-025		
		Roadside	C-21218-1	1	T-16-001	T-16-006	TA14-021
		Curbside	C-21218-2	1	TA16-001	TB16-001	TB16-024
					TB16-025		
		Roadside	C-21219-1	1	T-17-001	T-17-006	T-17-022
		Curbside	C-21219-2	1	T-17-501	TA17-001	TB17-001
					TB17-024		
		Roadside	C-21220-1	1	T-15-002	T-15-026	TA15-002
		Curbside	C-21220-2	1	TA15-036	TB15-026	TB15-036
					TC15-061	TC15-060	
		Roadside	C-21222-1	1	T-17-002	TA17-002	TB17-026
		Curbside	C-21222-2	1	TC17-060	TC17-061	
		Roadside	C-21223-1	1	T-19-001	TA19-001	TB19-001
		Curbside	C-21223-2	1			
		Roadside	C-21221-1	1	T-16-002	TA16-002	TB16-026
		Curbside	C-21221-2	1			
		Roadside	C-25932-1	1	TA16-021		
		Curbside	C-25932-2	1			
14	AIR SPRING SPACER ASSEMBLY[5]				Includes air spring plate and assembly		
			C-21210-3	2	T-14-021	TB14-021	
			C-21210-4	2	T-15-021	T-15-022	T-15-023
					TA15-021	TB15-021	TB15-023
						TB17-027	TB17-028
			C-21210-5	2	T-16-021	T-16-022	TB16-021
						TB16-022	
			C-21210-6	2	T-17-020	T-17-021	T-17-023
					TA17-021	TA17-020	TB16-020
					TB17-020	TB17-021	
15	UPPER SHOCK BRACKET		S-20023	2	All models		
16	AIR SPRING		S-20124	2	Fits all models unless shown below		
			S-20127	2	T-17-022	TB15-025	
17	AIR SPRING MOUNTING KIT		S-20033 / 2	2	All models		
18	UNIVERSAL HEIGHT CONTROL VALVE (Not Shown)		VS-227	1[6]	Fits all models. Includes height control valve, exhaust line, and spacer bracket		
19	UNIVERSAL LINKAGE ASSEMBLY (Not Shown)		S-14187	1[6]	Includes linkage assembly and hardware		
20	AUTOMATIC DUMP VALVE (Not Shown)		VS-23460	1[6]	Includes dump valve and fittings		
21	PRESSURE PROTECTION VALVE (Not Shown)		VS-1128	1[6]	Includes valve only		

[5] Component may vary for slider suspensions based on slider box manufacturer. Contact Hendrickson for assistance.

[6] Quantities for air control components are per trailer.

NOTE: Identification tag can be found on the front of the roadside frame bracket or the inside of the curbside beam.

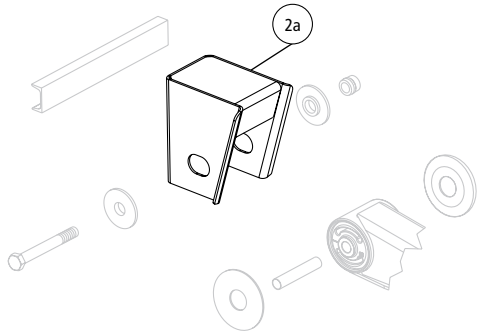

Wingless, weld-on frame bracket, welded alignment

Wingless, weld-on frame bracket with QUIK-ALIGN®

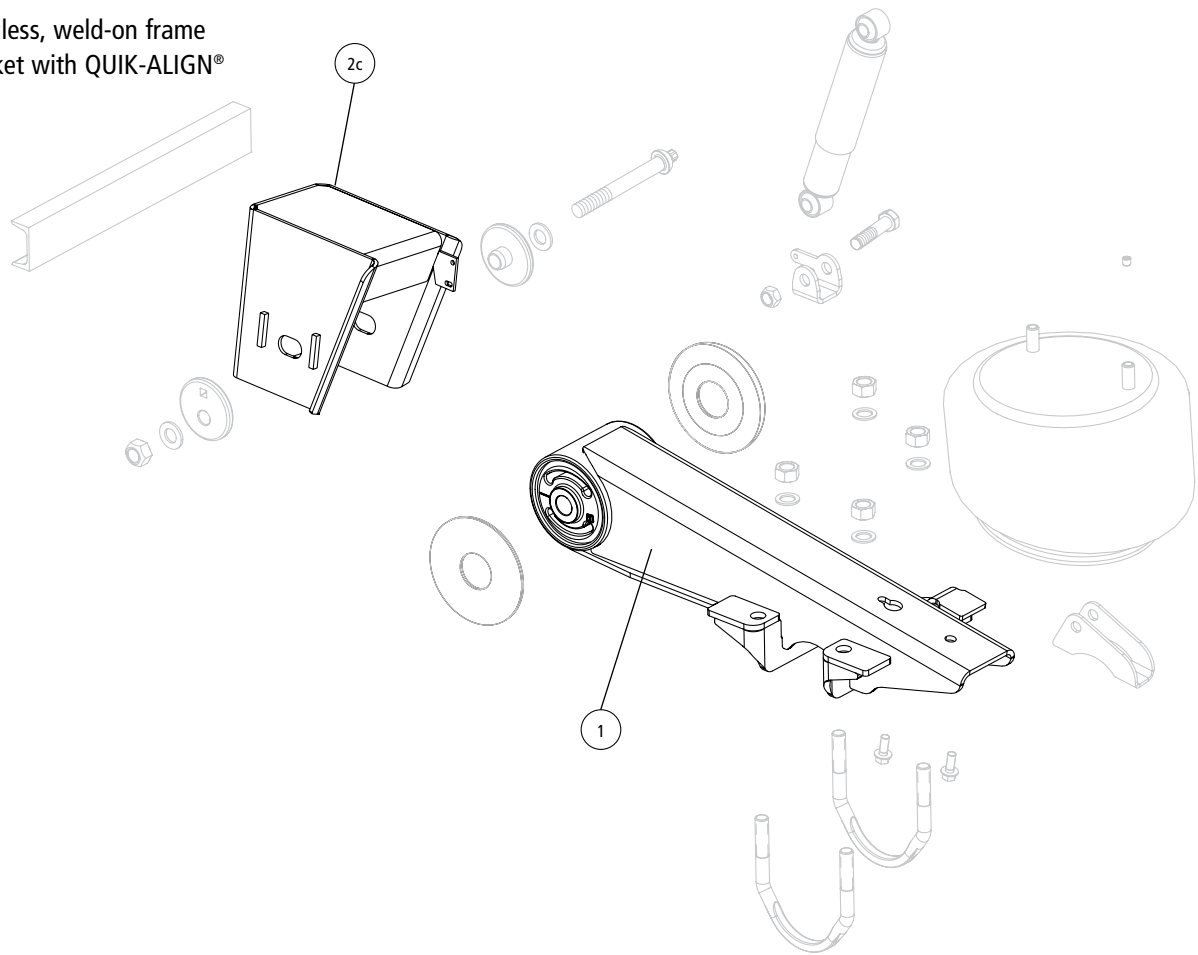

HT® Series Suspension Components

ITEM	DESCRIPTION	PART NO.	QTY. PER SUSP.	FITS MODELS HT300_?_ OR N-HT300_?_		
1	**BEAM ASSEMBLY**[1]					
	Roadside	S-20186-1	1	All models		
	Curbside	S-20186-2	1	All models		
2	**FRAME BRACKET**					
2a	**Wingless, Weld-on, Welded Alignment**					
	Roadside	S-20196-1	1	-15-001	-15-005	-15-007
	Curbside	S-20196-2	1	-15-017	-15-024	-15-501
				-15-518	-15-701	
	Roadside	S-20197-1	1	-17-001	-17-005	-17-007
	Curbside	S-20197-2	1	-17-024	-17-501	-17-518
				-17-701		
	Roadside	S-20286-1	1	-15-016		
	Curbside	S-20286-2	1			
	Roadside	S-20065-1	1	-17-003	-17-012	-17-019
	Curbside	S-20065-2	1	-17-503	-17-520	
	Roadside	C-21123-1	1	-17-025		
	Curbside	C-21123-2	1			
	Roadside	S-14190-1	1	-19-001		
	Curbside	S-14190-2	1			
	Roadside	S-21454-1	1	-21-003		
	Curbside	S-21454-2	1			
	Roadside	S-21150-1	1	-23-001		
	Curbside	S-21150-2	1			
	Roadside	S-21122-1	1	-15-021	-15-025	
	Curbside	S-21122-2				
2b	**Wingless, Bolt-on, QUIK-ALIGN®** (Not Shown)					
	Roadside	S-23512-1	1	TB17-022		
	Curbside	S-23512-2	1			
2c	**Wingless, Weld-on, QUIK-ALIGN**					
	Roadside	S-23790-1	1	TB15-001	TB15-023	TB15-024
	Curbside	S-23790-2	1	TB15-027	TB15-518	
	Roadside	S-24635-1	1	TB17-001	TB17-024	
	Curbside	S-24635-2	1			
	Roadside	S-23461-1	1	TB19-007	TB19-020	
	Curbside	S-23461-2	1			
	Roadside	C-23797-1	1	TB15-016		
	Curbside	C-23797-2	1			
	Roadside	S-21592-1	1	TB16-026	TB17-003	
	Curbside	S-21592-2	1			
2d	**Wingless, Bolt-on, Welded Alignment** (Not Shown)					
	Roadside	S-22073-1	1	-23-002		
	Curbside	S-22073-2	1			
	Roadside	S-22281-1	1	-17-022		
	Curbside	S-22281-2	1			
	Roadside	S-20008-1	1	-17-004		
	Curbside	S-20008-2	1			
2e	**Wingless, Bolt-on, QUIK-ALIGN** (Not Shown)					
	Roadside	S-24220-1	1	TC15-060		
	Curbside	S-24220-2	1			
	Roadside	S-24226-1	1	TC15-061		
	Curbside	S-24226-2	1			
	Roadside	S-24222-1	1	TC17-060		
	Curbside	S-24222-2	1			

Picture shown may not resemble all models.

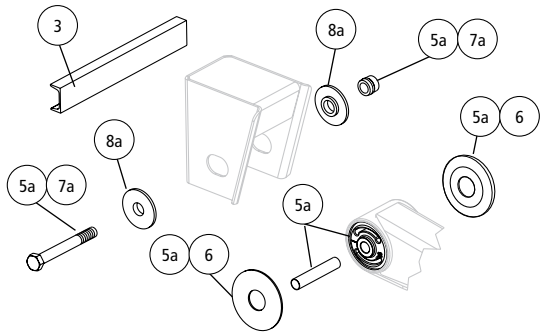

Wingless, weld-on frame bracket, welded alignment

Wingless, weld-on frame bracket with QUIK-ALIGN®

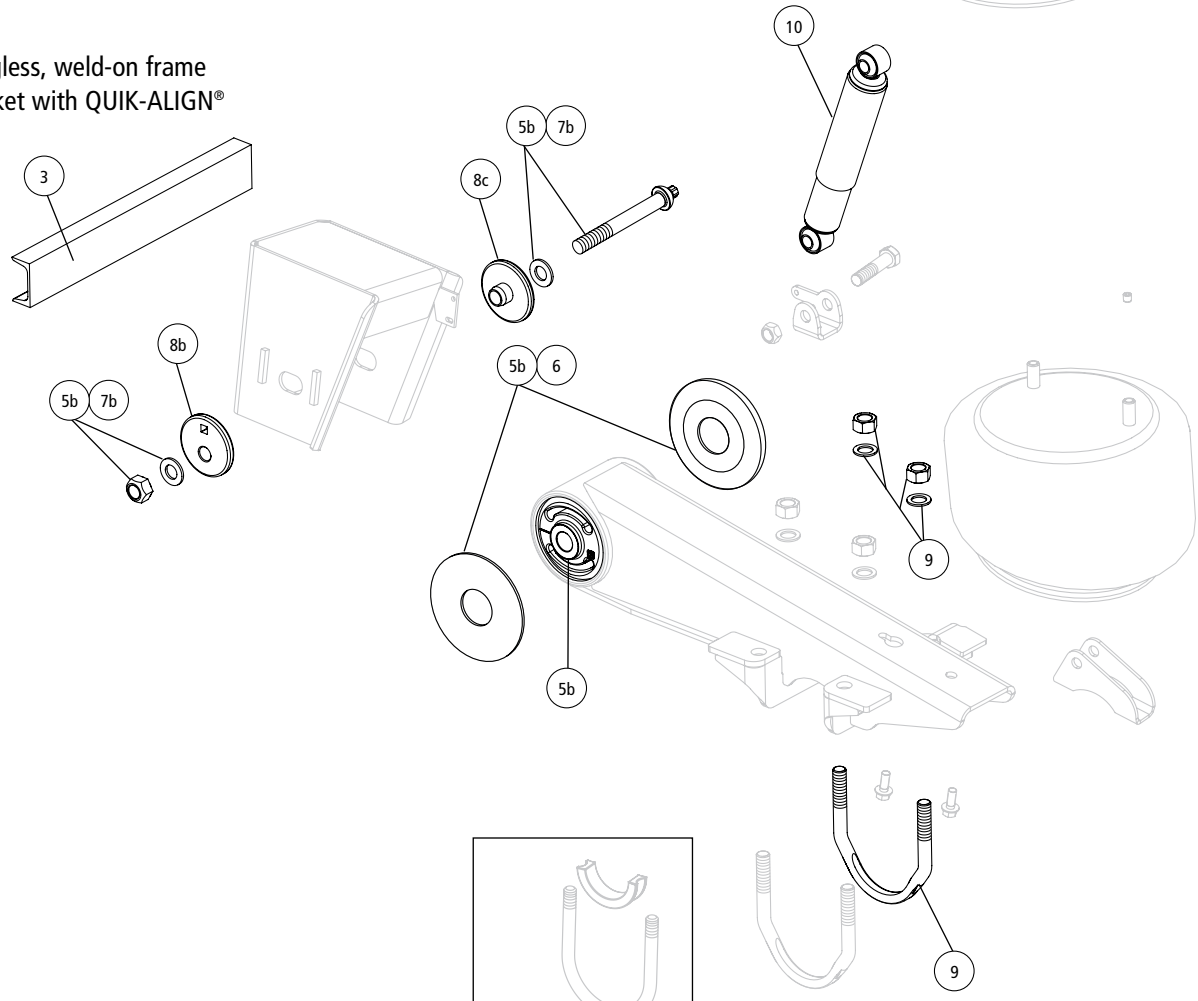

Previous U-bolt with axle spacer

HT® Series Suspension Components

ITEM	DESCRIPTION	PART NO.	QTY. PER SUSP.	FITS MODELS HT300_?_ OR N-HT300_?_		
2	**FRAME BRACKET** (Continued)					
	2e Wingless, Bolt-on, QUIK-ALIGN® (Not Shown)					
	Roadside	S-24228-1	1	TC17-061		
	Curbside	S-24228-2	1			
	Roadside	S-24181-1	1	TC19-060	TC19-062	
	Curbside	S-24181-2	1			
	Roadside	S-24251-1	1	TC19-061	TC19-063	
	Curbside	S-24251-2	1			
	2f Winged, Bolt-on, QUIK-ALIGN					
	Roadside	S-25461-1	1	TA15-070		
	Curbside	S-25461-2	1			
	Roadside	S-25618-1	1	TA15-036		
	Curbside	S-25618-2				
	Roadside	S-25462-1	1	TA17-070		
	Curbside	S-25462-2	1			
3	**FRAME BRACKET C-CHANNEL**	A-1631-19	1	All models		
4	**FRAME BRACKET BRACE** (Not Shown)	B-2347-6	2	-21-003	-23-001	
5	**TRI-FUNCTIONAL® II BUSHING KIT**[2]					
	5a Welded Alignment	S-6914	2	Includes bushing, bushing tube spacers, cap screw, prevailing torque hex nut, liner and lube		
	5b QUIK-ALIGN	S-24691	2	Includes bushing, bushing tube spacers, round head bolt, prevailing torque hex nut, hardened washers and lube		
6	**BUSHING TUBE SPACER**	S-21099	4	All models		
7	**PIVOT BOLT KIT**					
	7a Welded Alignment	S-3646	2	Includes cap screw, prevailing torque hex nut and liner		
	7b QUIK-ALIGN	S-24679	2	Includes round head bolt, hardened washers and prevailing torque hex nut		
8	**ALIGNMENT COLLARS**					
	8a Welded Alignment	S-2770	4	Collars are welded to frame bracket		
	8b Eccentric, QUIK-ALIGN (outer)	S-20925	2	Alignment hole is off center		
	8c Concentric, QUIK-ALIGN (inner)	S-20924	2	Alignment hole is centered		
9	**U-BOLT KIT**	S-21140/4	4	Includes (1) stepped U-bolt and hardware. Axle spacer is not needed with stepped U-bolt.		
10	**SHOCK ABSORBER**	S-20126	2	All models except below		
		S-2160	2	-15-007 -17-007 TB19-007	-15-011 -17-011 TB19-020	-15-021 -17-012
		S-21553	2	-15-017 -17-520	-15-518	-17-518
		S-24579	2	TB15-027		
		S-21699	2	TB15-518		

[2] Bushing tool S-21307 is required to correctly re-bush the suspension.

NOTE: Identification tag can be found on the front of the curbside frame bracket or the inside of the curbside beam.

Picture shown may not resemble all models.

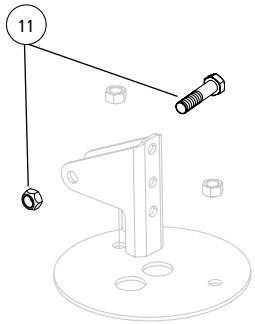

Wingless, weld-on frame bracket with QUIK-ALIGN®

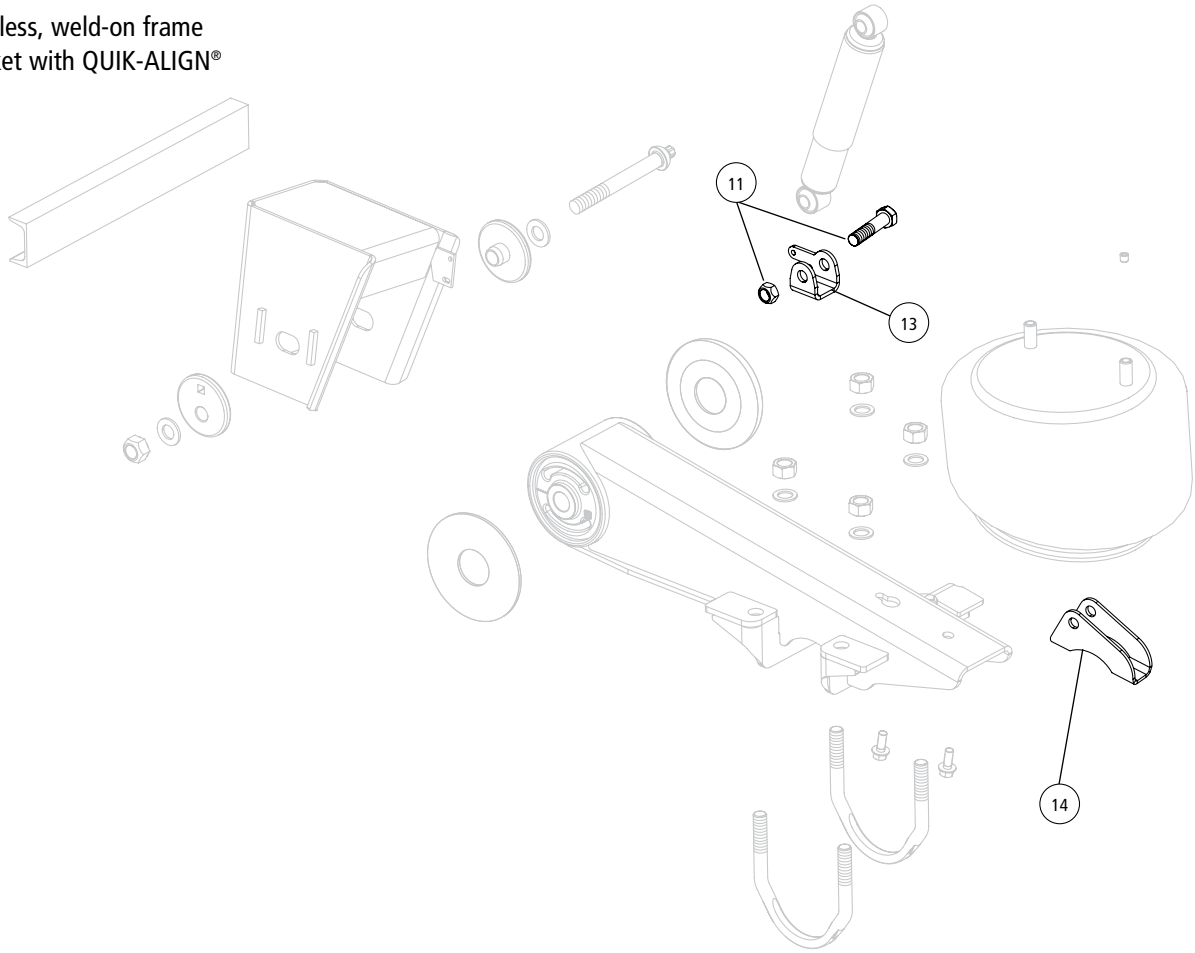

HT® Series Suspension Components

ITEM	DESCRIPTION	PART NO.	QTY. PER SUSP.	FITS MODELS HT300_?_ OR N-HT300_?_		
11	**SHOCK BOLT KIT**	S-20031/2	2	All models except below		
		S-20218/2	2	-15-010	-17-010	
		S-2157/2	2	-15-007 -17-007 TB19-007	-15-011 -17-011 TB19-020	-15-021 -17-012
12	**REMOTE SHOCK MOUNT** (Not Shown)					
	12a Upper Assembly	S-2592	2	-15-007 TB15-027	-17-007 TB19-007	-17-012 TB19-020
	12b Lower Assembly[3]	S-20069	2	All models		
	12c Shock Bracket Assembly	S-9002	2	-15-011 (Includes shock bracket assembly and shock clevis)	-15-021	-17-011
13	**LOWER SHOCK CLEVIS**[3]	S-20069	2	All models		
14	**LOWER SHOCK BRACKET**	S-2723	2	-15-007 -17-007 TB19-007	-15-011 -17-011 TB19-020	-15-021 -17-012

[3] Lower shock clevis is included with beam assembly (item #1).

NOTE: Identification tag can be found on the front of the curbside frame bracket or the inside of the curbside beam.

Picture shown may not resemble all models.

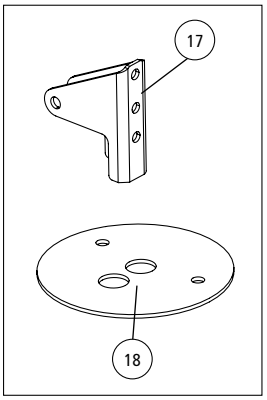

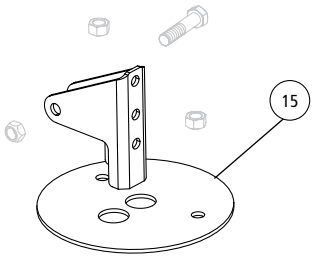

Wingless, weld-on frame bracket with QUIK-ALIGN®

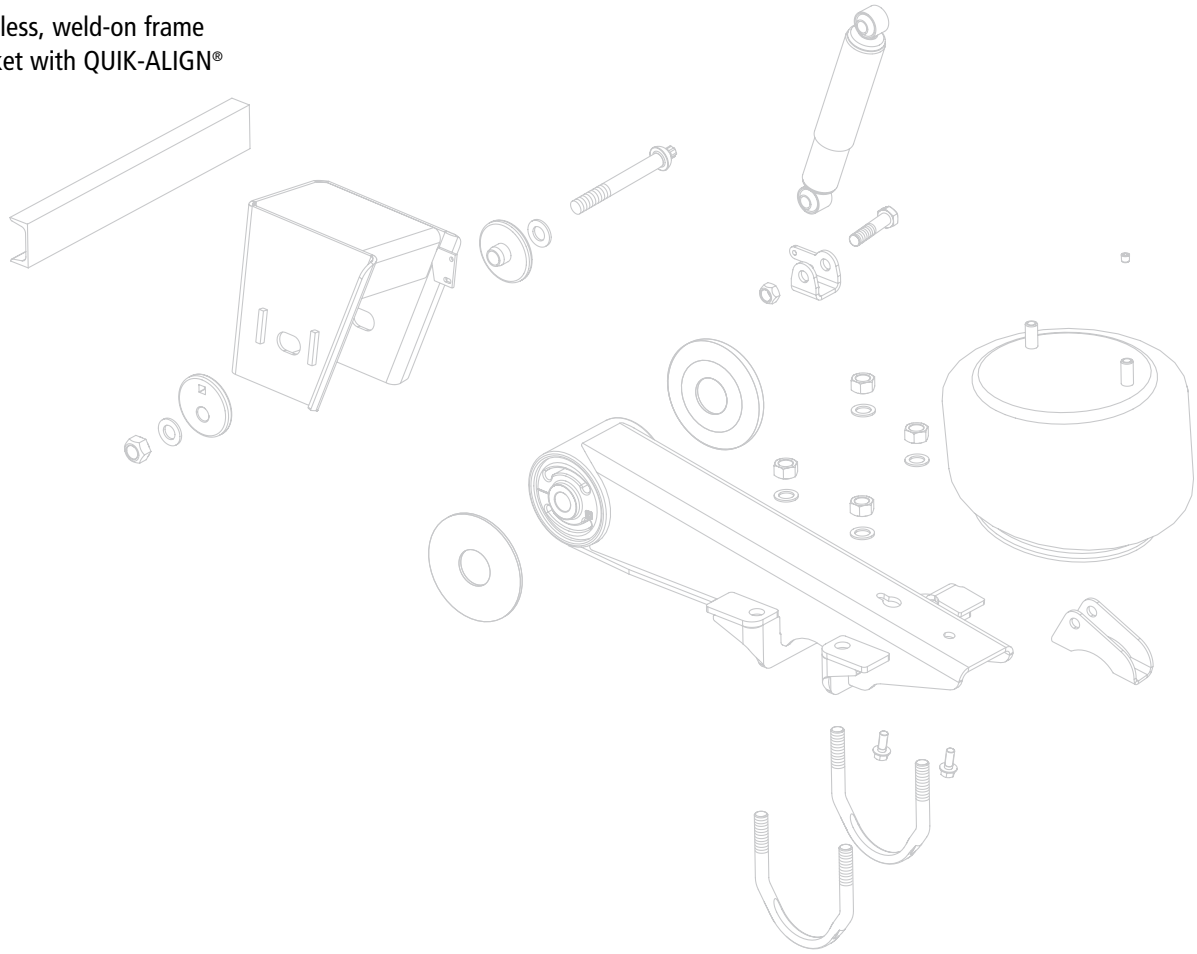

ITEM	DESCRIPTION	PART NO.	QTY. PER SUSP.	FITS MODELS HT300_?_ OR N-HT300_?_		
15	**AIR SPRING SHOCK MOUNT**[4]					
	Roadside	C-20199-1	1	-15-001	-15-005	-15-016
	Curbside	C-20199-2	1	-15-017	-15-024	-15-501
				-15-518	-15-701	TB15-001
				TB15-016	TB15-024	TB15-518
	Roadside	C-20191-1	1	-17-001	-17-005	-17-017
	Curbside	C-20191-2		-17-024	-17-501	-17-518
			1	-17-701	TB17-001	TB17-024
	Roadside	C-20191-3	1	-17-002	-17-022	TA17-070
	Curbside	C-20191-4	1	TB17-022	TC17-060	TC17-061
	Roadside	C-21453-1	1	-21-003		
	Curbside	C-21453-2	1			
	Roadside	C-20188-3	1	-15-002	TA15-036	TA15-070
	Curbside	C-20188-4	1	TC15-060	TC15-061	
	Roadside	C-20195-1	1	-17-003	-17-019	-17-503
	Curbside	C-20195-2	1	-17-520	TB17-003	
	Roadside	C-20195-3		-17-004		
	Curbside	C-20195-4				
	Roadside	C-20708-1	1	-19-001		
	Curbside	C-20708-2	1			
	Roadside	C-20708-3	1	-19-004	TC19-062	TC19-063
	Curbside	C-20708-4	1			
	Roadside	C-24496-1	1	TC19-060	TC19-061	TC19-062
	Curbside	C-24496-2	1			
	Roadside	C-24595-1	1	TB16-026		
	Curbside	C-24595-2	1			
	Roadside	C-24497-1	1	TB19-020		
	Curbside	C-24497-2	1			
16	**AIR SPRING SPACER ASSEMBLY**[4] (Not Shown)					
	Roadside	C-20329-1	1	T-17-007		
	Curbside	C-20329-2	1			
	Roadside	C-20309-1	1	T-17-012		
	Curbside	C-20309-2	1			
	Roadside	C-21952-1	1	TB19-007		
	Curbside	C-21952-2	1			
	Roadside and Curbside	C-21149	1 each	-23-001		
	Roadside and Curbside	C-21149-1	1 each	-23-002		
17	**UPPER SHOCK BRACKET**					
	Roadside	C-21797-1	1	All models except below		
	Curbside	C-21797-2	1			
	Roadside	C-24591-1		TB16-026		
	Curbside	C-24591-2				
18	**AIR SPRING PLATE**	C-20192	2	-15-007		
		C-20193	2	TB15-027		

[4] Component may vary for slider suspensions based on slider box manufacturer. Contact Hendrickson for assistance.

NOTE: Identification tag can be found on the front of the curbside frame bracket or the inside of the curbside beam.

Picture shown may not resemble all models.

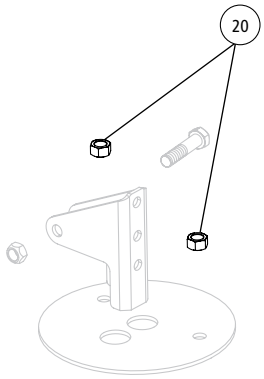

Wingless, weld-on frame bracket with QUIK-ALIGN®

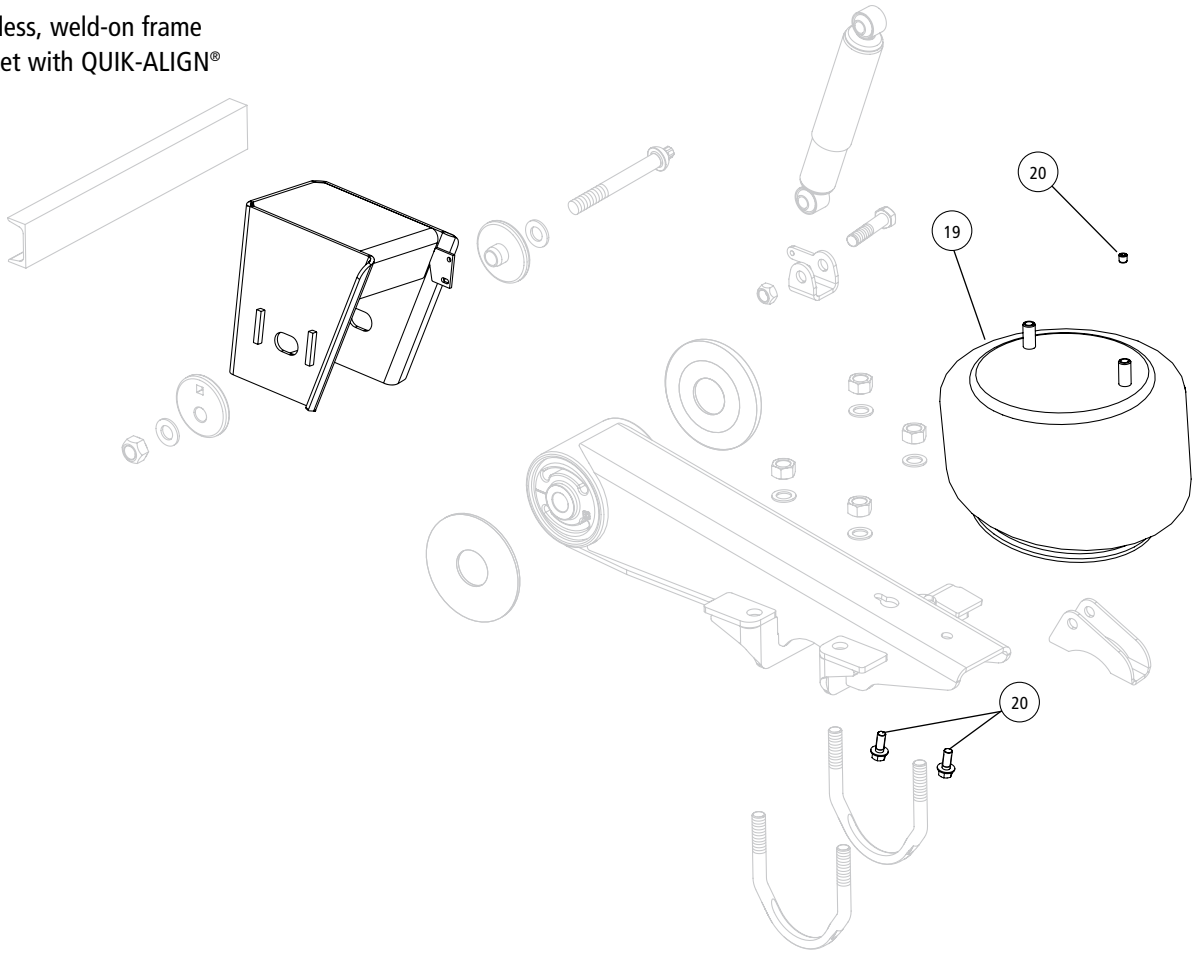

HT® Series Suspension Components

ITEM	DESCRIPTION	PART NO.	QTY. PER SUSP.	FITS MODELS HT300_?_ OR N-HT300_?_
19	**AIR SPRING**	S-4771	2	All models
20	**AIR SPRING MOUNTING KIT**	S-4903/2	2	All models
21	**UNIVERSAL HEIGHT CONTROL VALVE** (Not Shown)	VS-227	1	Fits all models. Includes height control valve, exhaust line and spacer bracket.
22	**UNIVERSAL LINKAGE ASSEMBLY** (Not Shown)	S-14187	1[5]	Includes linkage assembly and hardware
23	**AUTOMATIC DUMP VALVE** (Not Shown)	VS-23460	1[5]	Includes dump valve and fittings
24	**PRESSURE PROTECTION VALVE** (Not Shown)	VS-1128	1[5]	Includes valve only

[5] Quantities for air control components are per trailer.

NOTE: Identification tag can be found on the front of the curbside frame bracket or the inside of the curbside beam.

Primary Fixed Suspension System

HT® Series Underslung

L1230 - Suspension Components 136

L83 - Suspension Components 142

L938 - Suspension Components 148

L582 - Suspension Components 155

L940 - Suspension Components 161

L1266 - Frame Brackets 275

L1287 - Shocks 294

L1182 - Vehicle Controls 302

HT® Series Suspension Components

Picture shown may not resemble all models.

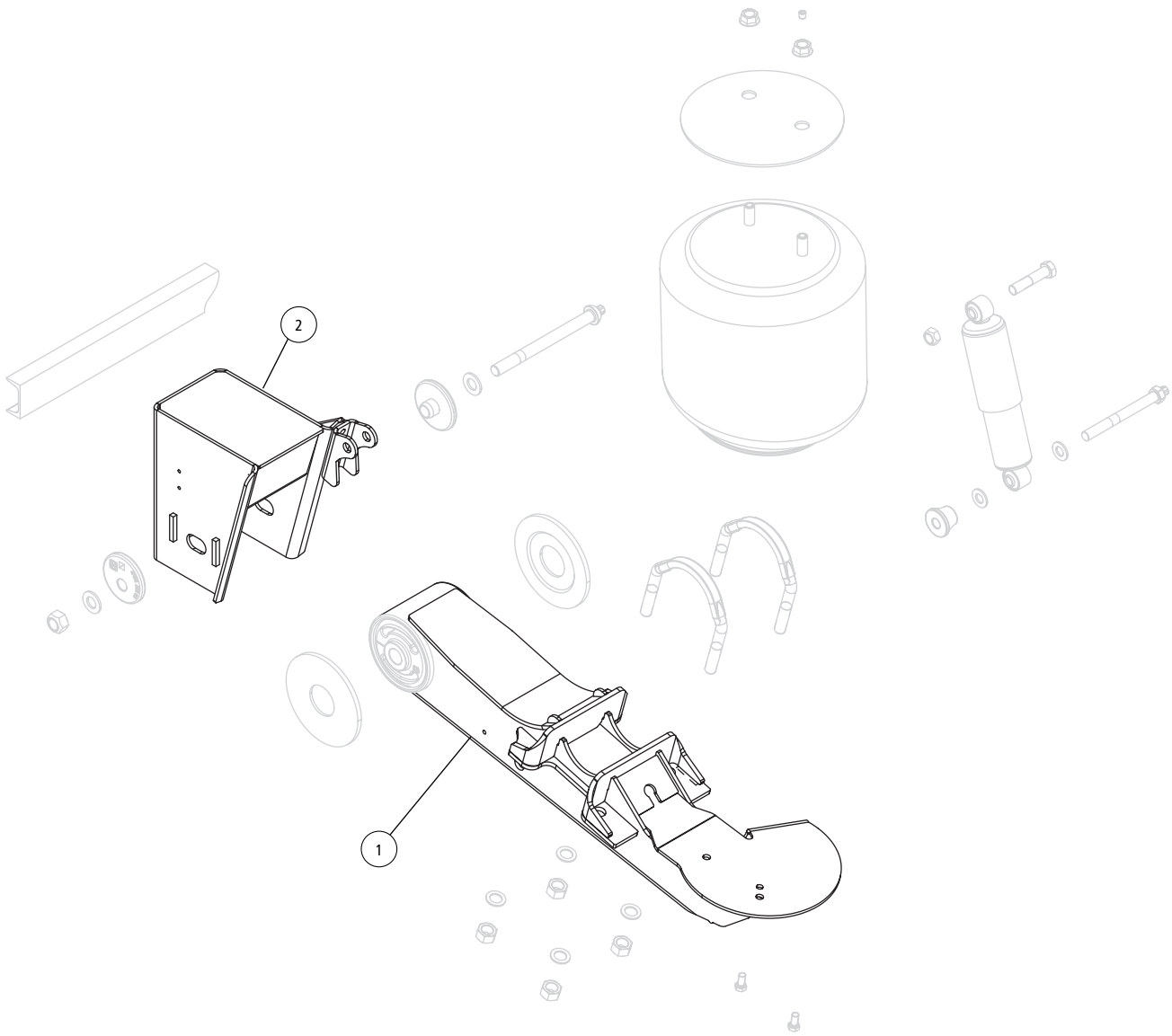

Wingless, weld-on frame bracket
with QUIK-ALIGN® (Shown)

ITEM	DESCRIPTION	PART NO.	QTY. PER SUSP.	NOTE
1	**BEAM ASSEMBLY**			
	Roadside	S-32426-1	1	All models
	Curbside	S-32426-2	1	All models
2	**FRAME BRACKET**			See L1266 Frame Bracket Parts List

NOTE: Identification tag can be found on the front of the roadside frame bracket or the inside of the curbside beam.

HT® Series Suspension Components

Picture shown may not resemble all models.

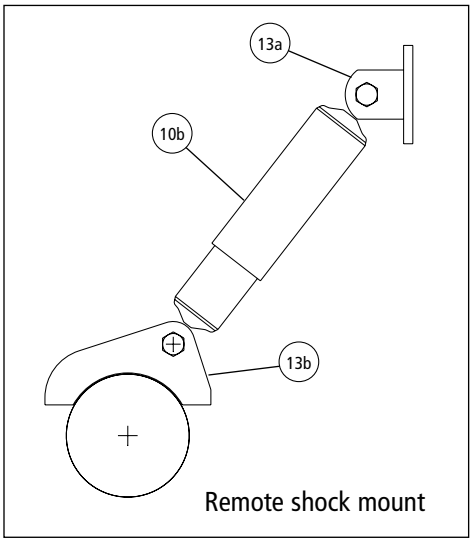

Remote shock mount

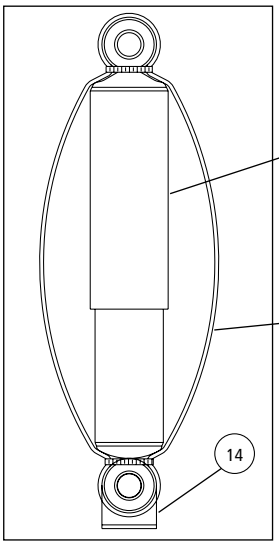

(Shock not included with shock strap kit)

Standard shock mount with shock strap

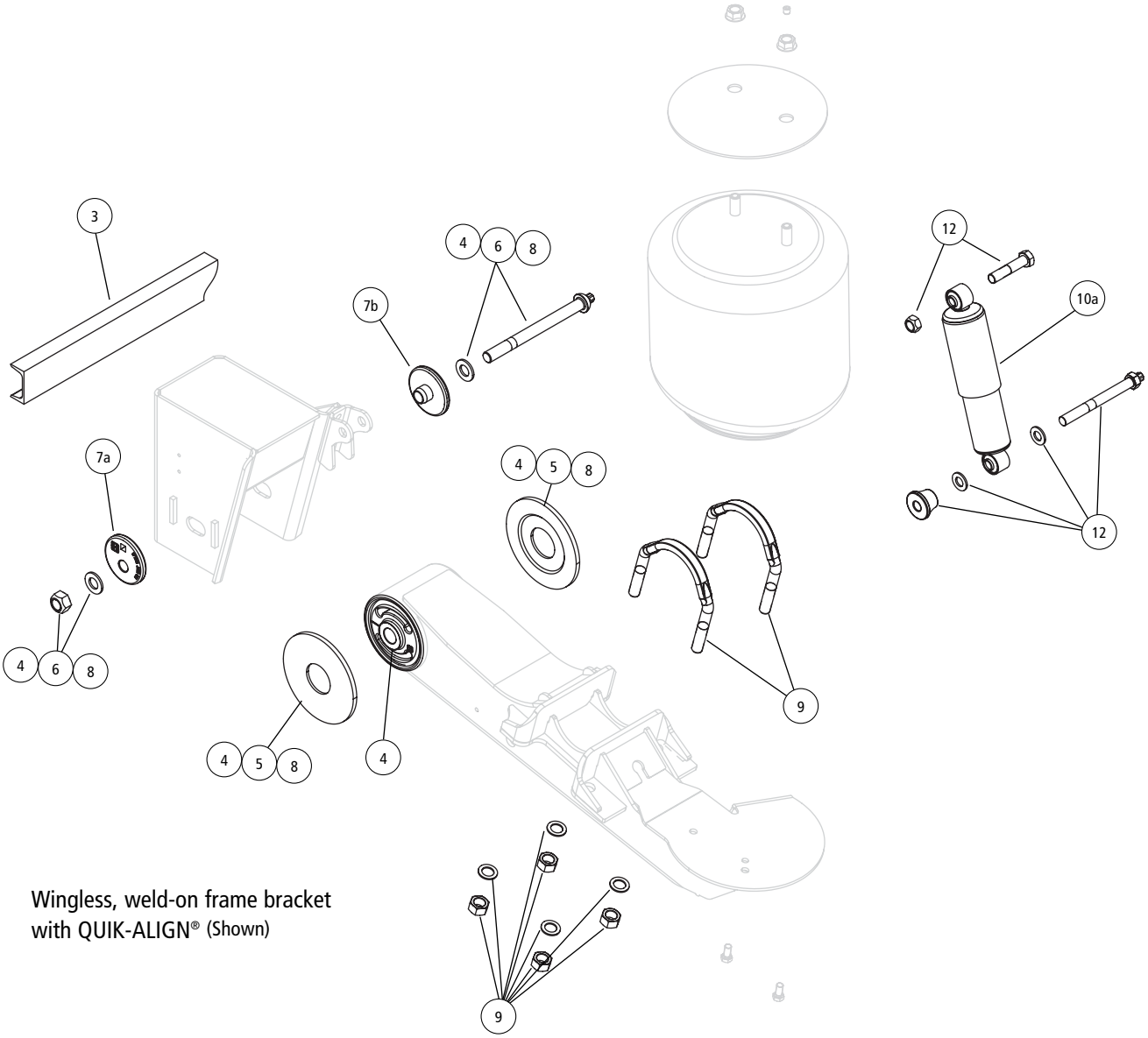

Wingless, weld-on frame bracket with QUIK-ALIGN® (Shown)

ITEM	DESCRIPTION	PART NO.	QTY. PER SUSP.	NOTE
3	**FRAME BRACKET C-CHANNEL**	A-1631-19	1	All models
4	**TRI-FUNCTIONAL® II BUSHING KIT**[1]	S-24691	2	Includes bushing, bushing tube spacers, round head bolt, prevailing torque hex nut, hardened washers and lube
5	**BUSHING TUBE SPACER**	S-21099	4	All models
6	**QUIK-ALIGN® PIVOT BOLT KIT**	S-24679	2	Includes round head bolt, hardened washers and prevailing torque hex nut
7	**ALIGNMENT COLLARS**			
	7a Eccentric (outer)	S-20925	2	Alignment hole is off center
	7b Concentric (inner)	S-20924	2	Alignment hole is centered
8	**BUSHING TUBE SPACER KIT**	S-26369	2	Includes round head bolt, hardened washers prevailing torque hex nut and bushing tube spacers
9	**U-BOLT KIT**	S-21140/4	4	Includes (1) stepped U-bolt and hardware

10 & 11 SHOCK ABSORBERS AND SHOCK STRAP KITS

ITEM	DESCRIPTION	SHOCK PART NUMBER (10)	QTY. PER SUSP.	SHOCK STRAP KIT NUMBER (11)[2]	QTY PER SUSP.
	a Standard Shock Mount				
	Standard Travel				
	5.5" to 6.5" RH	S-23744	2	C-23086-10	1
	Standard Travel and Limited Jounce				
	7.5" to 17" RH	S-23743	2	C-23086-5	1
	Limited Jounce Travel				
	6.5" RH	S-23744	2	C-23086-10	1
	Extended Rebound Travel				
	6.5" RH	S-24579	2	C-23086-8	1
	b Remote Shock Mount[3]				
	Standard Travel				
	5.5" to 6.5" RH	S-23744	2	C-23086-10	1
	14" to 17" RH	S-23316	2	C-23086-6	1
	Standard Travel and Limited Jounce				
	7.5" to 12" RH	S-23743	2	C-23086-5	1
	Limited Jounce Travel				
	6.5" RH	S-23744	2	C-23086-10	1
	14" to 17" RH	S-23316	2	C-23086-6	1
	Extended Rebound Travel				
	6.5" RH	S-23316	2	C-23086-6	1

ITEM	DESCRIPTION	PART NO.	QTY. PER SUSP.	NOTE
12	**SHOCK BOLT KIT**			(1) Shock bolt is required per shock
	Standard Shock Mount	S-24185/2	2	
	Standard Shock Mount Lower	S-23642	2	
	Standard Shock Mount Upper	S-2157/2	1	
	Remote Shock Mount	S-2157/2	2	
13	**REMOTE SHOCK MOUNT**			
	13a Upper Assembly	A-5431	2	
	13b Lower Assembly	S-2723	2	
14	**SHOCK STRAP CLEVIS**	B-20919	2	Only needed for standard shock mount included in shock strap kit

1. Bushing tool S-21307 is required to correctly re-bush the suspension
2. Shock strap kits: includes (2) straps, (2) clevis and (4) nylon ties
3. Clevis not included and not needed for remote shock mount

NOTE: Identification tag can be found on the front of the roadside frame bracket or the inside of the curbside beam.

HT® Series Suspension Components

Picture shown may not resemble all models.

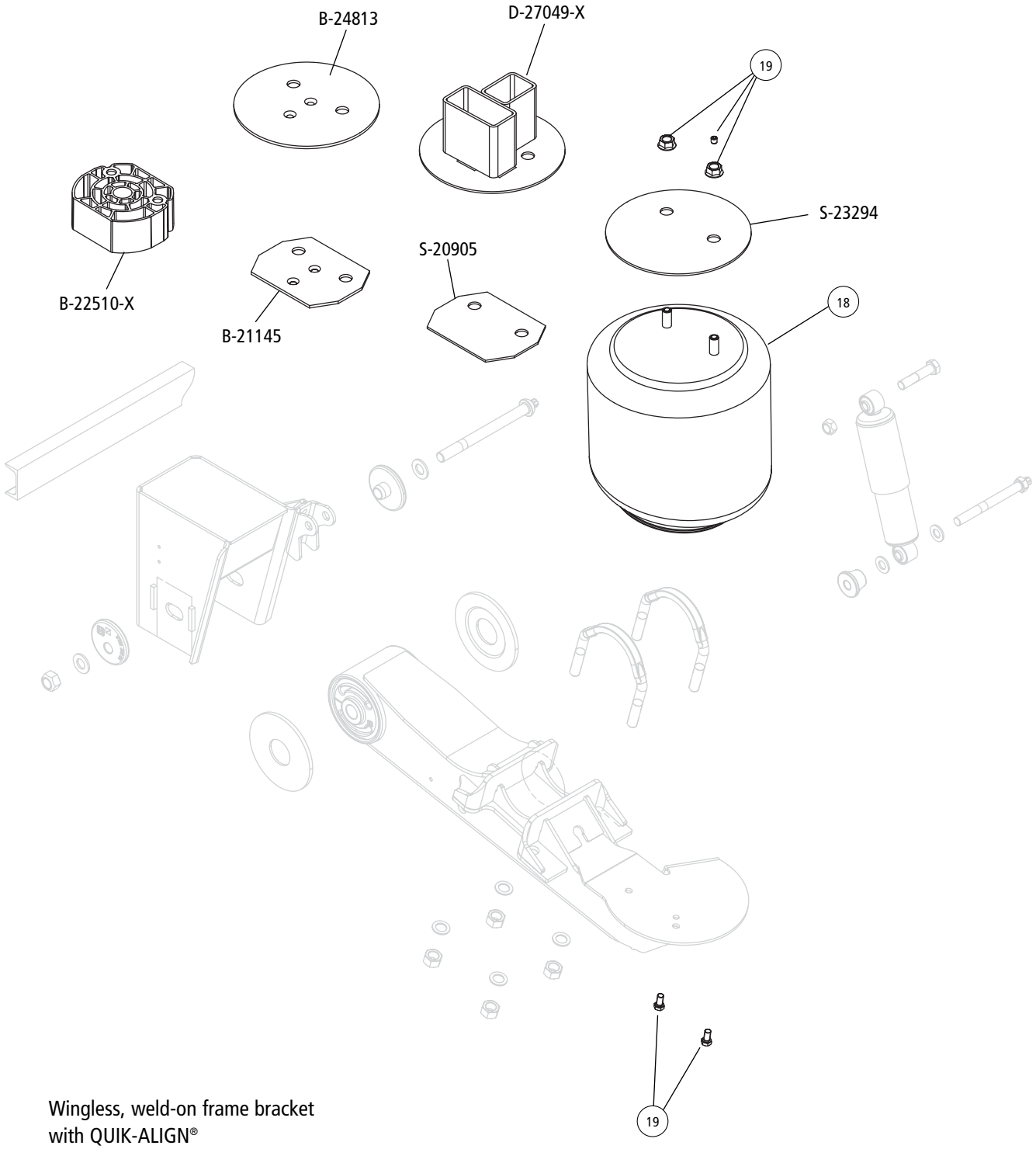

Wingless, weld-on frame bracket
with QUIK-ALIGN®

ITEM	DESCRIPTION	PART NO.	QTY. PER SUSP.	NOTE
15	**AIR SPRING MOUNTING PLATE**			
	15a Weld-on, Standard Travel			
	5.5" to 12" RH	S-23294	2	
	12" RH	S-20905	2	
	15b Bolt-on, Standard Travel			
	5.5" to 9" RH	B-24813	2	
	12" RH	S-23294	2	
	12" RH	B-21145	2	
16	**AIR SPRING SPACER ASSEMBLY**			Includes air spring plate and spacer assembly
	Weld-on, Standard Travel			
	14" RH	D-27049-2	2	
	17" RH	D-27049-4	2	
17	**AIR SPRING SPACER**			
	17a Weld-on, Standard Travel			
	12" RH	B-22510-3	2	
	17b Bolt-on, Standard Travel			
	12" RH	B-22510-3	2	
18	**AIR SPRING**	S-25319	2	
19	**AIR SPRING MOUNTING KIT**			Order (1) kit per air spring
	Weld-on, Standard Travel			
	5.5" to 17" RH	S-25339/2	2	
	12" RH	S-33437/2	2	
	Weld-on, Limited Jounce Travel			
	6.5" to 17" RH	S-25339/2	2	
	6.5" to 7.5" RH	S-33433/2	2	
	9" RH	S-33434/2	2	
	Weld-on, Extended Rebound Travel			
	6.5" RH	S-25339/2	2	
	Bolt-on, Standard Travel			
	5.5" to 12" RH	S-25339/2	2	
	12" RH	S-33437/2	2	
	Bolt-on, Limited Jounce Travel			
	6.5" to 9" RH	S-25339/2	2	
	6.5" to 7.5" RH	S-33433/2	2	
	9" RH	S-33434/2	2	

NOTE: Identification tag can be found on the front of the roadside frame bracket or the inside of the curbside beam.

HT® Series Suspension Components

Picture shown may not resemble all models.

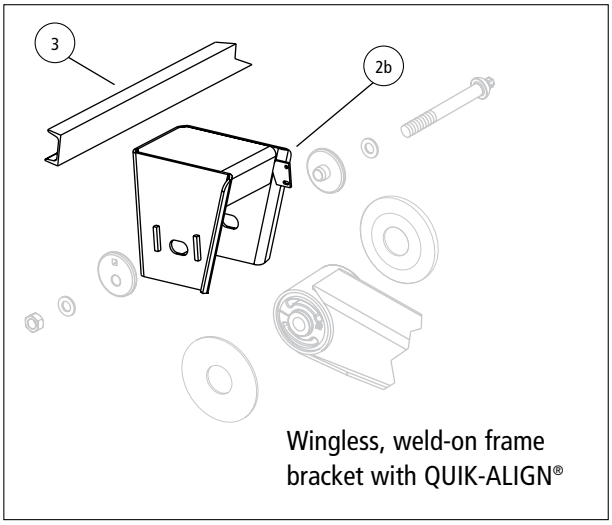

Wingless, weld-on frame bracket with QUIK-ALIGN®

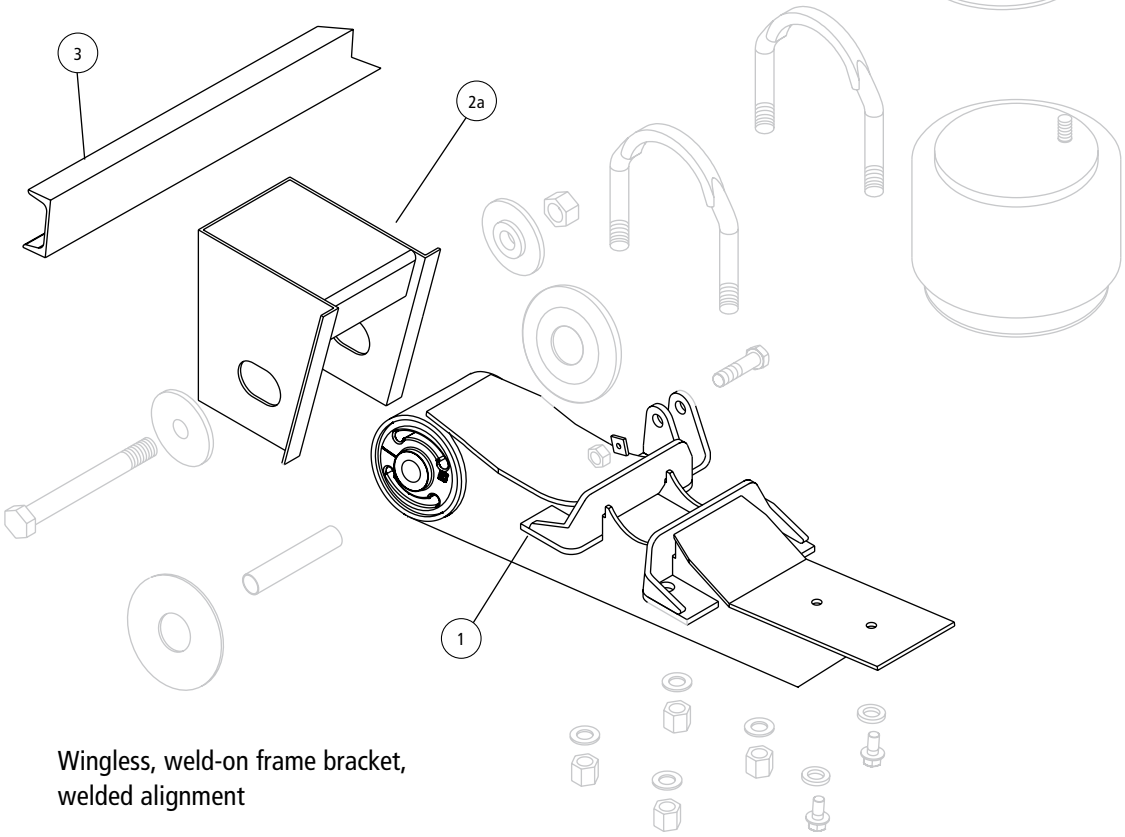

Wingless, weld-on frame bracket, welded alignment

ITEM	DESCRIPTION	PART NO.	QTY. PER SUSP.	FITS MODELS HT190_?_ or N-HT190?_		
1	**BEAM ASSEMBLY**[1]					
	Roadside	D-20200-1	1	U-6-020	U-7-001	U-7-020
	Curbside	D-20200-2	1	U-7-021	U-7-024	U-7.5-001
				U-7.5-020	U-7.5-501	U-7.5-517
				U-9-001	U-9-003	U-9-020
				U-9-022	U-9-024	U-9-030
				U-12-001	U-12-030	U-12-031
				UB6-020	UB6-022	UB6-030
				UB7-001	UB7-020	UB7-021
				UB7.5-001	UB7.5-020	UB9-001
				UB12-001	UB12-003	
	Roadside	D-20333-1	1	U-6.75-001	U-6.75-002	U-6.75-003
	Curbside	D-20333-2	1	U-6.75-020		
	Roadside	D-20663-1	1	U-9-007		
	Curbside	D-20663-2	1			
2	**FRAME BRACKET**					
	2a **Wingless, Weld-on, Welded Alignment**					
	Roadside	S-20211	1	U-9-001	U-9-007	U-9-020
	Curbside	S-20065-2	1	U-9-022	U-9-024	
	Roadside	S-20216	1	U-6-020	U-7-001	U-7-020
	Curbside	S-20064-2	1	U-7-024	U-7.5-001	U-7.5-020
				U-7.5-501	U-7.5-517	
	Roadside and Curbside	C-20222	1 each	U-6.75-001	U-6.75-002	U-6.75-003
				U-6.75-020	U-7-021	
	Roadside	D-15188-1	1	U-12-001		
	Curbside	S-14190-2	1			
	Roadside	S-14959-1	1	U-12-031		
	Curbside	S-14959-2	1			
	2b **Wingless, Weld-on, QUIK-ALIGN®**					
	Roadside	S-22580	1	UB6-020	UB6-030	UB7-001
	Curbside	S-21590-2	1	UB7-020	UB7-021	UB7.5-001
				UB7.5-020		
	Roadside	D-22601	1	UB9-001	UB9-020	
	Curbside	S-21592-2	1			
	Roadside	D-23265-1	1	UB12-001		
	Curbside	S-23461-2	1			
3	**FRAME BRACKET C-CHANNEL**	A-1631-19	1	All models		

1. Lower shock mount is included with beam assembly (not available for individual sale).

NOTE: Identification tag can be found on the front of the roadside frame bracket or the inside of the curbside beam.

HT® Series Suspension Components

Picture shown may not resemble all models.

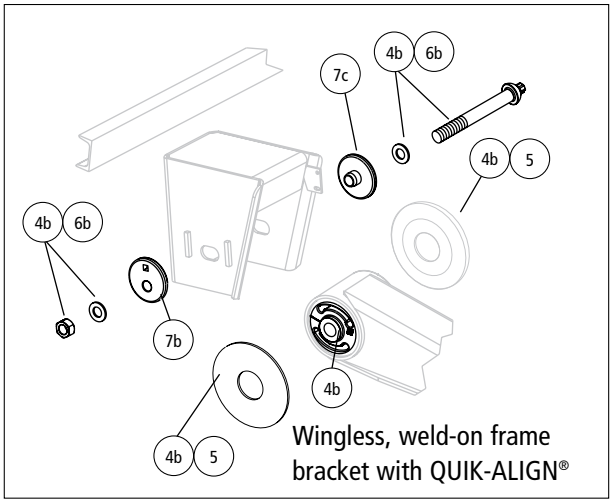

Wingless, weld-on frame bracket with QUIK-ALIGN®

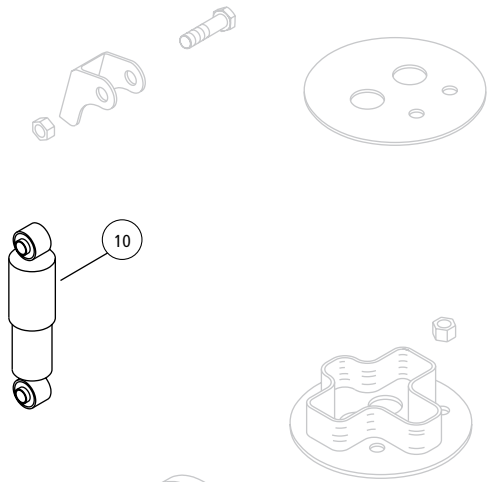

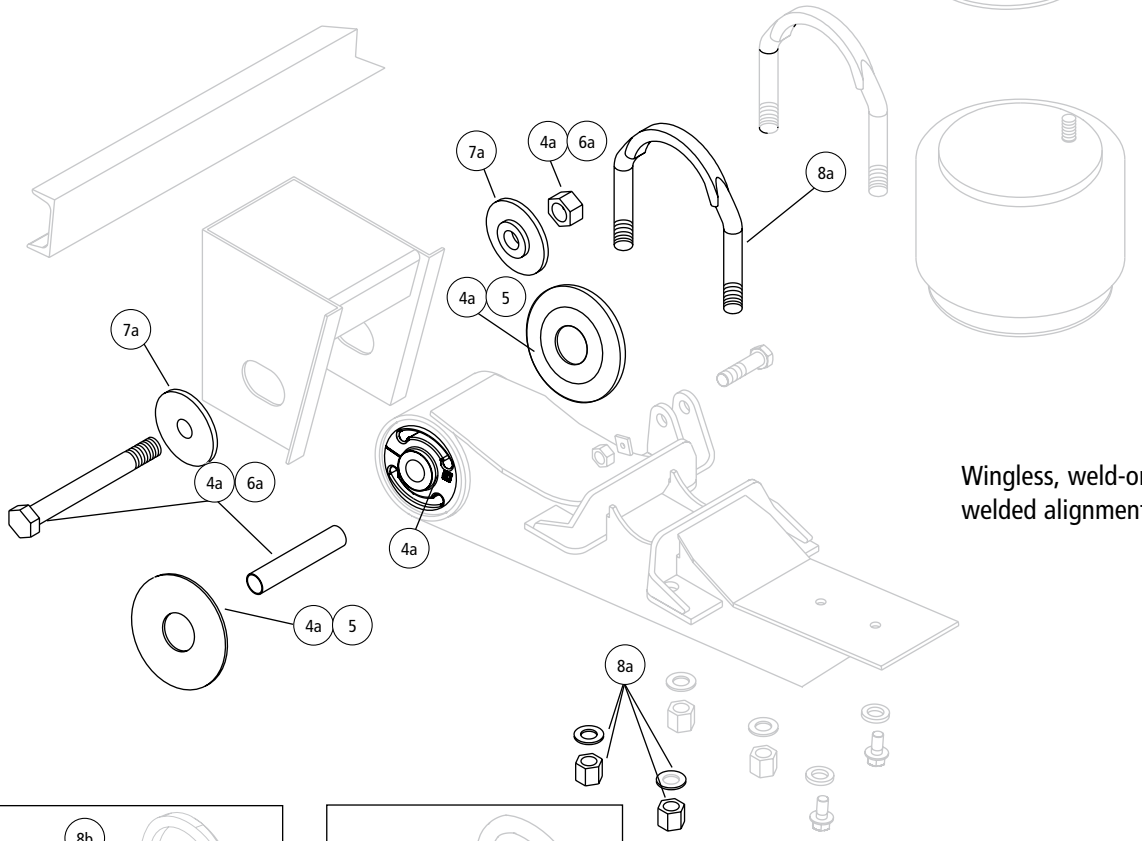

Wingless, weld-on frame bracket, welded alignment

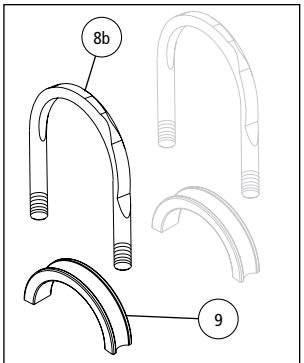

Flattened U-bolt used in 17.5" tire applications

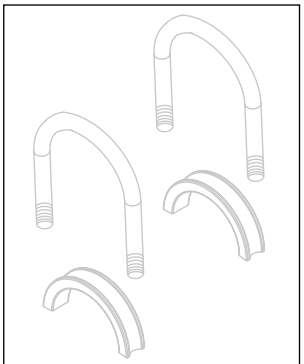

Previous U-bolt with axle spacer

ITEM	DESCRIPTION	PART NO.	QTY. PER SUSP.	FITS MODELS HT190_?_or N-HT190_?_		
4	**TRI-FUNCTIONAL® II BUSHING KIT**[2]					
	4a Welded Alignment	S-6914	2	Includes bushing, bushing tube spacers, cap screw, prevailing torque hex nut, liner and lube		
	4b QUIK-ALIGN®	S-24691	2	Includes bushing, bushing tube spacers, round head bolt, prevailing torque hex nut, hardened washers and lube		
5	**BUSHING TUBE SPACER**	S-21099	4	All models		
6	**PIVOT BOLT KIT**					
	6a Welded Alignment	S-3646	2	Includes cap screw, prevailing torque hex nut and liner		
	6b QUIK-ALIGN	S-24679	2	Includes round head bolt, hardened washers and prevailing torque hex nut		
7	**ALIGNMENT COLLARS**					
	7a Welded Alignment	S-2770	4	Collars are welded to frame bracket		
	7b Eccentric, QUIK-ALIGN (outer)	S-20925	2	Alignment hole is off center		
	7c Concentric, QUIK-ALIGN (inner)	S-20924	2	Alignment hole is centered		
8	**U-BOLT KIT**			Includes (1) U-bolt and hardware		
	8a Standard (with stepped U-bolt)	S-21140/4	4	U-6.75-001	U-6.75-002	U-6.75-003
				U-7-001	U-7-021	U-7-024
				U-7.5-001	U-7.5-501	U-7.5-517
				U-9-001	U-9-003	U-9-007
				U-9-022	U-9-024	U-9-030
				U-12-001	U-12-030	U-12-031
				UB6-030	UB7-001	UB7.5-001
				UB9-001	UB12-001	UB12-003
	8b Flattened[3]	S-22894/4	4	U-6-020	U-6.75-020	U-7-020
				UB6-020	UB6-022	UB7-020
				UB7-021	UB9-020	
9	**AXLE SPACER**[4]	S-20701	4	Axle spacer is not needed with new stepped U-bolt. For use with flattened U-bolt only.		
10	**SHOCK ABSORBER**	S-20001	2	U-6-020	U-7-001	U-7-020
				U-7-021	U-7-024	U-7.5-001
				U-7.5-020	U-7.5-501	U-9-001
				U-9-003	U-9-007	U-9-020
				U-9-024	U-9-030	U-12-001
				U-12-030	U-12-031	UB6-020
				UB6-022	UB6-030	UB7-001
				UB7-020	UB7.5-001	UB7.5-020
				UB9-001	UB9-020	UB12-001
				UB12-003		
		S-20002	2	U-7.5-517		
		S-2212	2	U-6.75-001	U-6.75-002	U-6.75-003
				U-6.75-020		
		S-23649	2	U-9-022	UB7-021	
11	**SHOCK STRAP KIT** (Not Shown)			Includes (4) nylon ties and (2) shock straps		
		S-14587-1	1	Use with S-20001 or S-20002 shock		
		S-14587-3	1	Use with S-2212 shock		
		S-23086-5	1	Use with S-23649 shock		

2. Bushing tool S-21307 is required to correctly re-bush the suspension.
3. Must order axle spacer (item #9).
4. Must order with flattened U-bolt (item #8b).

NOTE: Identification tag can be found on the front of the roadside frame bracket or the inside of the curbside beam.

HT® Series Suspension Components

Picture shown may not resemble all models.

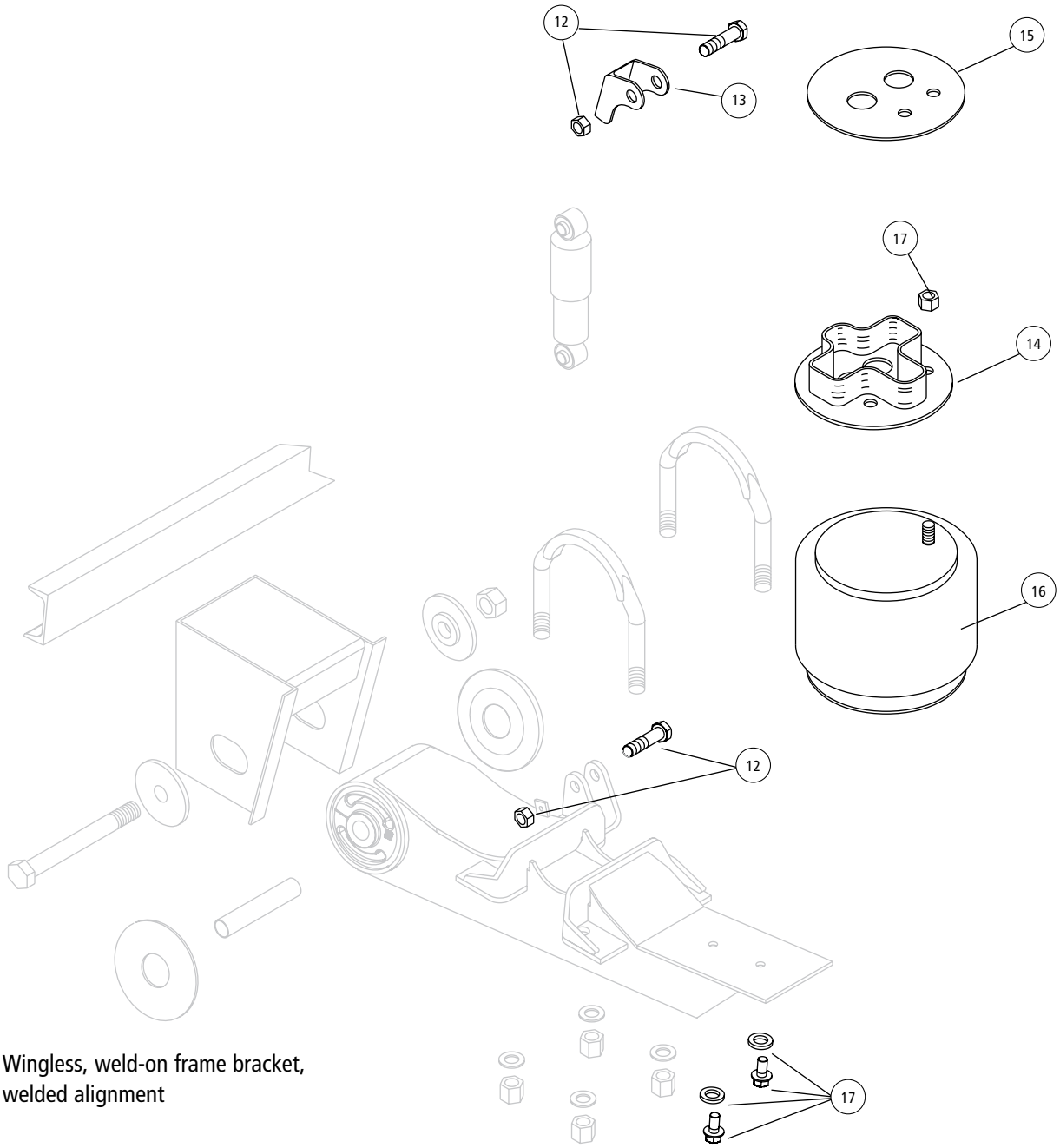

Wingless, weld-on frame bracket, welded alignment

ITEM	DESCRIPTION	PART NO.	QTY. PER SUSP.	FITS MODELS HT190_?_ or N-HT190_?_		
12	SHOCK BOLT KIT	S-20218/2	2	U-6-020	U-7-001	U-7-020
				U-7-021	U-7-024	U-7.5-001
				U-7.5-020	U-7.5-501	U-7.5-517
				U-9-001	U-9-003	U-9-007
				U-9-020	U-9-022	U-9-024
				U-9-030	U-12-001	U-12-030
				U-12-031	UB6-020	UB6-022
				UB6-030	UB7-001	UB7-020
				UB7-021	UB7.5-001	UB7.5-020
				UB9-001	UB9-020	UB12-001
				UB12-003		
		S-2157/2	2	U-6.75-001	U-6.75-002	U-6.75-003
				U-6.75-020		
13	UPPER SHOCK CLEVIS	S-20113	2	U-6-020	U-7-001	U-7-020
				U-7-021	U-7-024	U-7.5-001
				U-7.5-020	U-7.5-501	U-7.5-517
				U-9-001	U-9-020	U-9-022
				U-9-024	U-12-001	U-12-031
				UB6-020	UB6-030	UB7-001
				UB7-020	UB7-021	UB7.5-001
				UB7.5-020	UB9-001	UB9-020
				UB12-001	UB12-003	
		S-2592	2	U-9-007		
14	AIR SPRING SPACER ASSEMBLY			Includes air spring plate and assembly		
		C-20016-1	2	U-7.5-001	U-7.5-020	U-7.5-501
				U-7.5-517	UB7.5-001	UB7.5-020
		C-20016-2	2	U-9-001	U-9-007	U-9-020
				U-9-022	U-9-024	UB9-001
				UB9-020		
		C-20016-5	2	U-12-001	U-12-031	UB12-001
15	AIR SPRING PLATE	B-21258	2	U-6-020	U-7-001	U-7-020
				U-7-024	UB6-020	UB6-030
				UB7-001	UB7-020	UB7-021
16	AIR SPRING	S-20217	2	All models		
17	AIR SPRING MOUNTING KIT	S-20033/2	2	All models		
18	AIR SPRING CROSSTUBE ASSEMBLY (Not Shown)	D-20221	1	U-6.75-001		
		D-21094	1	U-6.75-002	U-6.75-020	
		D-21095	1	U-6.75-003		
19	UNIVERSAL HEIGHT CONTROL VALVE (Not Shown)	VS-227	1[5]	Fits all models. Includes height control valve, exhaust line and spacer bracket		
20	UNIVERSAL LINKAGE ASSEMBLY (Not Shown)	S-14187	1[5]	Includes linkage assembly and hardware		
21	AUTO DUMP VALVE (Not Shown)	VS-23460	1[5]	Includes dump valve and fittings		
22	PRESSURE PROTECTION VALVE (Not Shown)	VS-1128	1[5]	Includes valve only		

5. Quantities for air control components are per trailer

NOTE: Identification tag can be found on the front of the roadside frame bracket or the inside of the curbside beam.

HT® Series Suspension Components

Picture shown may not resemble all models.

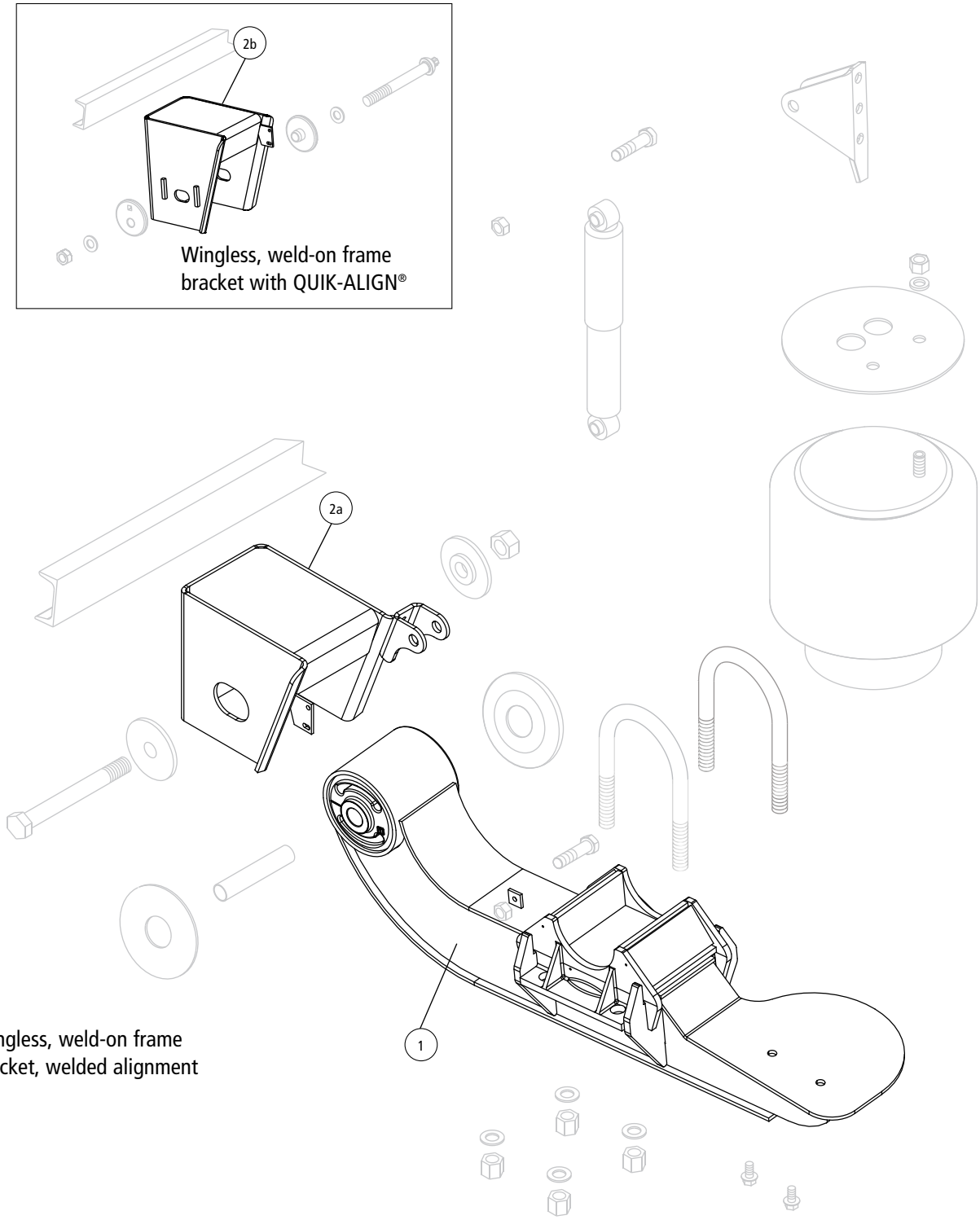

ITEM	DESCRIPTION	PART NO.	QTY. PER SUSP.	FITS MODELS HT250_?_ or N-HT250_?_		
1	**BEAM ASSEMBLY**					
	Roadside	S-20335-1	1	All models except below		
	Curbside	S-20335-2	1			
	Roadside	S-20338-3	1	U-9-020	U-9-021	U-9-023
	Curbside	S-20338-4	1	U-15-022	UB9-022	UB15-022
	Roadside	S-20338-1	1	U-7.5-021		
	Curbside	S-20338-2	1			
2	**FRAME BRACKET**					
	2a Wingless, Weld-on, Welded Alignment					
	Roadside	S-20321-1	1	U-6.5-001	U-6.5-008	U-6.5-011
	Curbside	S-20321-2	1	U-6.5-020	U-6.5-021	U-6.5-027
					U-6.5-517	U-7.5-005
	Roadside	S-20322-1	1	U-7.5-001	U-7.5-002	U-7.5-003
	Curbside	S-20322-2	1	U-7.5-008	U-7.5-017	U-7.5-027
				U-7.5-517	U-9-001	U-9-002
				U-9-003	U-9-004	U-9-006
				U-9-008	U-9-010	U-9-022
				U-9-024	U-9-025	U-9-027
				U-9-028	U-9-029	U-9-517
	Roadside	S-20324-1	1	U-12-002	U-14-001	U-14-026
	Curbside	S-20324-2	1	U-14-008	U-14-517	
				U-14-028	U-14-006	
	Roadside	S-20323-1	1	U-12-001	U-12-006	U-12-008
	Curbside	S-20323-2	1	U-12-026	U-12-517	
	Roadside	S-20717-1	1	U-6.5-002	U-6.5-003	U-6.5-022
	Curbside	S-20717-2	1			
	Roadside	S-23860-3	1	U-9-020	U-9-021	U-9-023
	Curbside	S-23860-4	1	U-15-022		
	Roadside	S-22663-1	1	U-6.5-024		
	Curbside	S-22663-2	1			
	Roadside	S-20357-1	1	U-7.5-021		
	Curbside	S-20357-2	1			
	Roadside	S-15019-1	1	U-6.5-030	U-6.5-031	
	Curbside	S-15019-2	1			
	2b Wingless, Weld-on, QUIK-ALIGN®					
	Roadside	S-22634-1	1	UB14-001	UB14-006	UB14-023
	Curbside	S-22634-2	1	UB14-027	UB14-028	
	Roadside	S-21688-1	1	UB12-001	UB12-006	UB12-027
	Curbside	S-21688-2	1	UB12-028		
	Roadside	S-23859-1	1	UB9-022	UB15-022	
	Curbside	S-23859-2	1			
	Roadside	S-21926-1	1	UB7.5-001	UB7.5-517	UB7.5-522
	Curbside	S-21926-2	1	UB9-001	UB9-002	UB9-003
			UB9-004	UB9-010	UB9-013	
				UB9-522		
	Roadside	S-21927-1	1	UB6.5-001	UB6.5-517	UB7.5-005
	Curbside	S-21927-2	1			
	Roadside	S-22581-1	1	UB6.5-002		
	Curbside	S-22581-2	1			
	Roadside	S-23859-1	1	UB15-022		
	Curbside	S-23859-2	1			

NOTE: Identification tag can be found on the front of the roadside frame bracket or the inside of the curbside beam.

HT® Series Suspension Components

Picture shown may not resemble all models.

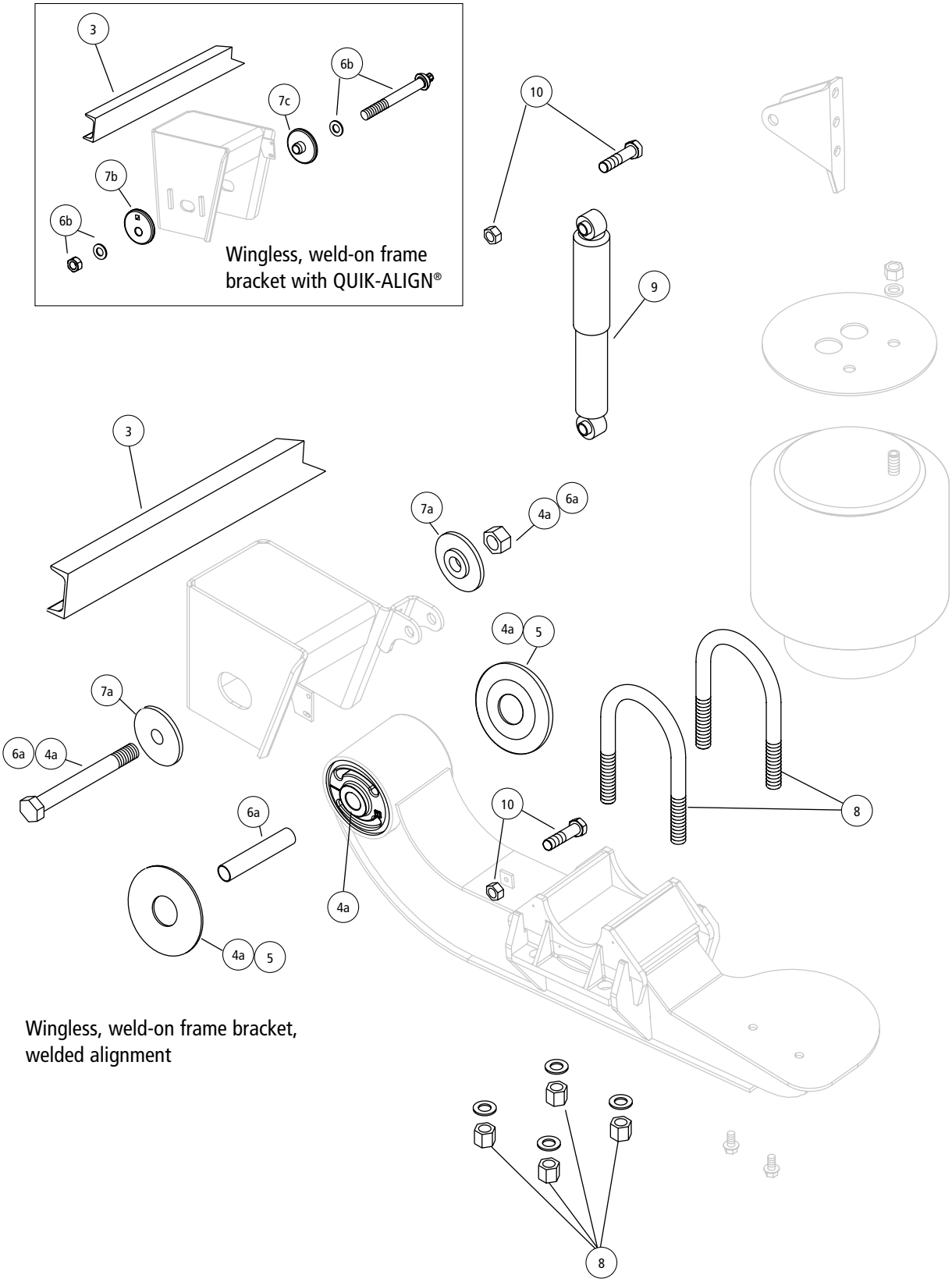

Wingless, weld-on frame bracket, welded alignment

ITEM	DESCRIPTION	PART NO.	QTY. PER SUSP.	FITS MODELS HT250_?_ or N-HT250_?_		
	2c Winged, Bolt-on, Welded Alignment (Not Shown)					
	Roadside	S-20337-1	1	U-12-007		
	Curbside	S-20337-2	1			
	Roadside	S-21230-1	1	U-14-007		
	Curbside	S-21230-2	1			
	Roadside	S-20326-1	1	U-6.5-007		
	Curbside	S-20326-2	1			
	Roadside	S-20327-1	1	U-7.5-007	U-9-007	
	Curbside	S-20327-2	1			
3	**FRAME BRACKET C-CHANNEL**	A-1631-19	1	All models		
4	**TRI-FUNCTIONAL® II BUSHING KIT**[1]					
	4a Welded Alignment	S-6914	2	Includes bushing, bushing tube spacers, cap screw, prevailing torque hex nut, liner and lube		
	4b QUIK-ALIGN® (Not Shown)	S-24691	2	Includes bushing, bushing tube spacers, round head bolt, prevailing torque hex nut, hardened washers and lube		
5	**BUSHING TUBE SPACER**	S-21099	4	All models		
6	**PIVOT BOLT KIT**					
	6a Welded Alignment	S-3646	2	Includes cap screw, prevailing torque hex nut and liner		
	6b QUIK-ALIGN	S-24679	2	Includes round head bolt, hardened washers and prevailing torque hex nut		
7	**ALIGNMENT COLLARS**					
	7a Welded Alignment	S-2770	4	Collars are welded to frame bracket		
	7b Eccentric QUIK-ALIGN (outer)	S-20925	2	Alignment hole is off center		
	7c Concentric QUIK-ALIGN (inner)	S-20924	2	Alignment hole is centered		
8	**U-BOLT KIT**	S-3650/4	4	All models		
9	**SHOCK ABSORBER**					
		S-20002	2	Fits all models unless shown below		
		S-21553	2	U-6.5-027	U-9-027	U-9-028
				U-14-028	UB6.5-522	U-7.5-027
				UB7.5-522	UB9-522	UB12-027
				UB12-028	UB14-027	UB14-028
		S-1667	2	U-7.5-021	U-7.5-022	U-7.5-521
		S-2212	2	U-9-020	U-9-021	U-9-023
				U-9.2-026	U-15-022	UB9-022
			UB15-022			
		S-20126	2	U-6.5-517	U-7.5-017	U-7.5-517
				U-9-517	U-12-517	U-14-517
				UB6.5-517	UB7.5-517	
		S-2160	2	U-6.5-030	U-6.5-031	
10	**SHOCK BOLT KIT**	S-2157/2	2	All models		

1. Bushing tool S-21307 is required to correctly re-bush the suspension

NOTE: Identification tag can be found on the front of the roadside frame bracket or the inside of the curbside beam.

HT® Series Suspension Components

Picture shown may not resemble all models.

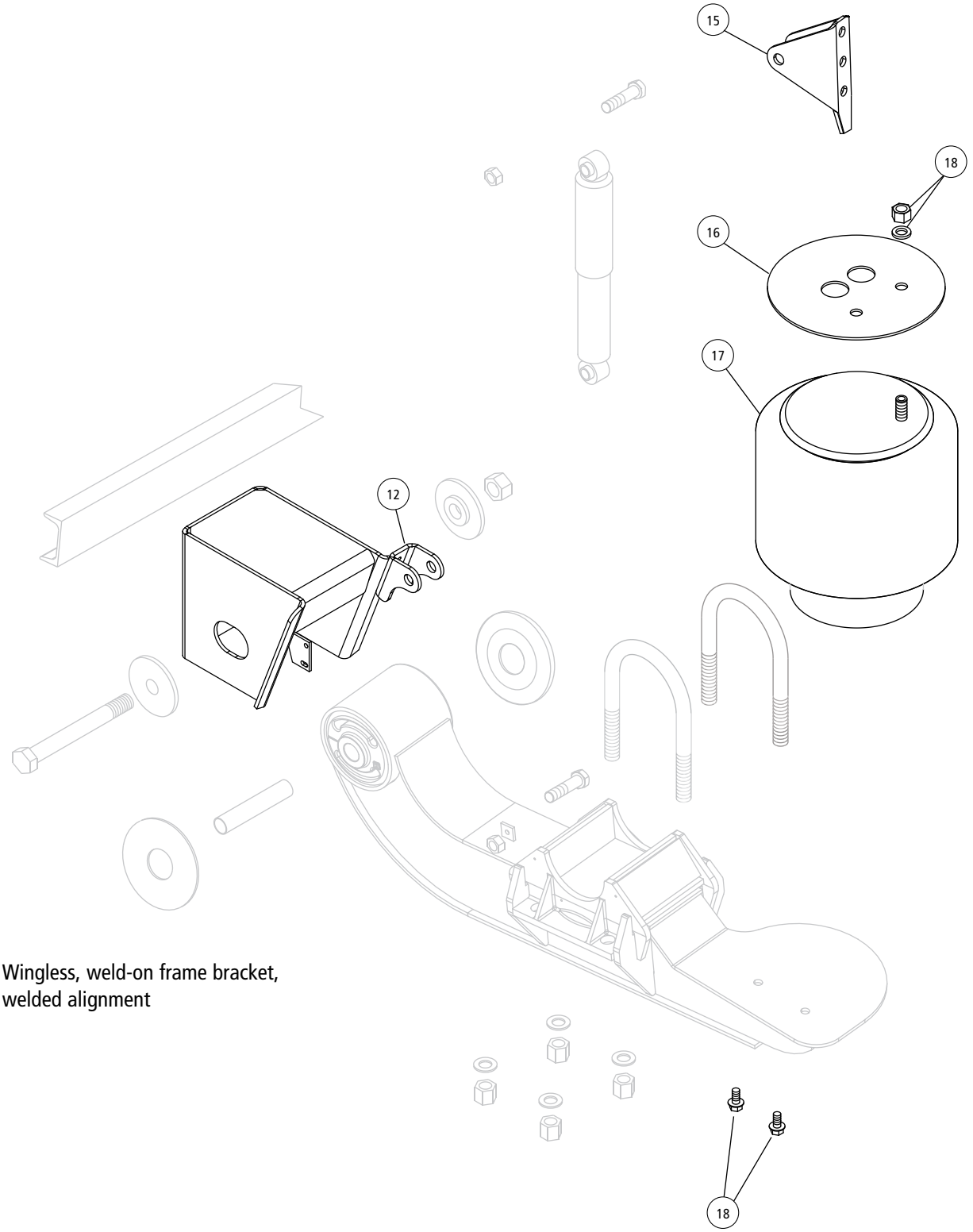

Wingless, weld-on frame bracket, welded alignment

ITEM	DESCRIPTION	PART NO.	QTY. PER SUSP.	FITS MODELS HT250 ? or N-HT250 ?		
11	**SHOCK STRAP KITS** (Not Shown)[2]	S-14587-1	1	Use with S-20002 or S-1667 shock		
		S-14587-8	1	Use with S-21553 or S-20126 shock		
		S-14587-3	1	Use with S-2212 shock		
		S-14587-2	1	Use with S-2160 shock		
12	**UPPER SHOCK CLEVIS**	S-20113	2	U-6.5-024		
13	**LOWER SHOCK CLEVIS** (Not Shown)	S-2592	2	All models		
14	**AIR SPRING SPACER ASSEMBLY** (Not Shown)			Includes air spring plate and spacer assembly		
		C-21210-1	2	U-7.5-002		
		C-21210-3	2	U-9-002	U-9-029	U-12-001
				U-12-006	U-12-008	U-12-517
				UB12-001	UB12-006	UB12-027
				UB12-028		
		C-21210-4	2	U-9-024	U-12-002	U-12-024
				U-14-001	U-14-006	U-14-008
				U-14-028	U-14-517	UB9-002
				UB9-013	UB14-001	UB14-006
				UB14-027	UB14-028	
		C-21215-3	2	U-12-007	U-12-026	
		C-21215-4	2	U-14-026	UB14-023	
		C-21215-5	2	U-14-007		
		A-22431	2	U-6.5-022		
15	**UPPER SHOCK BRACKET**	S-20023	2	U-6.5-030	U-6.5-031	
16	**AIR SPRING PLATE**					
		S-21209	2	U-6.5-001	U-6.5-002	U-6.5-008
				U-6.5-011	U-6.5-020	U-6.5-023
				U-6.5-024	U-6.5-027	U-6.5-030
				U-6.5-031	U-6.5-517	U-7.5-001
				U-7.5-005	U-7.5-008	U-7.5-017
				U-7.5-027	U-7.5-517	U-9-001
				U-9-006	U-9-008	U-9-010
				U-9-022	U-9-027	U-9-028
				U-9-517	UB6.5-001	UB6.5-002
				UB6.5-517	UB6.5-522	UB7.5-001
				UB7.5-005	UB7.5-522	UB9-001
			UB9-010	UB9-522		
		B-21211	2	U-6.5-007	U-7.5-007	U-9-007
		C-11134	2	U-7.5-021	U-7.5-022	U-9-021
				U-9-023	U-9.2-026	U-15-022
				UB9-022	UB15-022	

2. Shock strap kits include (2) shock straps and (4) nylon ties. (1) shock strap kit required per axle.

NOTE: Identification tag can be found on the front of the roadside frame bracket or the inside of the curbside beam.

ITEM	DESCRIPTION	PART NO.	QTY. PER SUSP.	FITS MODELS HT250_?_ or N-HT250_?_		
17	**AIR SPRING**					
		S-20124	2	All models except below		
		S-20127	2	U-9-006 U-12-006 UB12-006 UB14-028	U-9-028 U-14-006 UB12-028	U-9-029 U-14-028 UB14-006
		S-20413	2	U-6.5-011	U-6.5-023	
		S-20414	2	U-9-010	UB9-010	
		S-20716	2	U-6.5-002	U-6.5-003	U-6.5-031
		S-13122	2	U-9-020 U-9.2-026 UB15-022	U-9-021 U-15-022	U-9-023 UB9-022
		S-14249	2	U-7.5-021	U-7.5-022	
18	**AIR SPRING MOUNTING KIT**					
		S-20033/2	2	All models except below		
		S-4903/2	2	U-9-020 U-15-022	U-9-021 UB9-022	U-9-023 UB15-022
		S-1981/2	2	U-7.5-021	U-7.5-022	
19	**HEIGHT CONTROL VALVE** (Not Shown)	VS-227	1[3]	Fits all models. Includes height control valve, exhaust line and spacer bracket.		
20	**LINKAGE ASSEMBLY** (Not Shown)	S-14187	1[3]	Includes linkage assembly and hardware		
21	**AUTO DUMP VALVE** (Not Shown)	VS-23460	1[3]	Includes dump valve and fittings		
22	**PRESSURE PROTECTION VALVE** (Not Shown)	VS-1128	1[3]	Includes valve only		

3. Quantities for air control components are per trailer.

NOTE: Identification tag can be found on the front of the roadside frame bracket or the inside of the curbside beam.

Picture shown may not resemble all models.

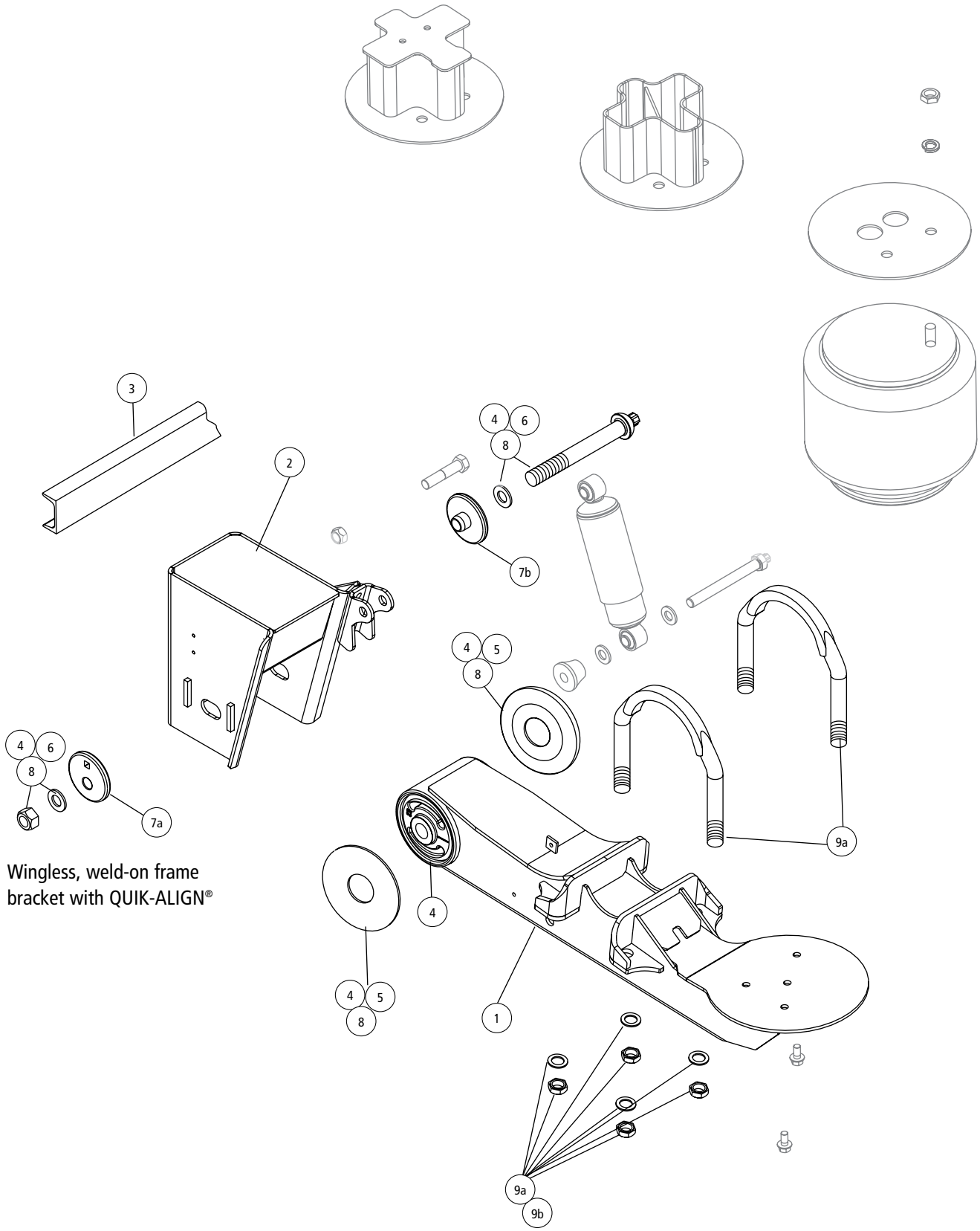

Wingless, weld-on frame bracket with QUIK-ALIGN®

HT® Series Suspension Components

ITEM	DESCRIPTION	PART NO.	QTY. PER SUSP.	NOTE
1	**BEAM ASSEMBLY**			
	Standard			
	Roadside	S-24186-1	1	All models except steer axles
	Curbside	S-24186-2	1	All models except steer axles
	Steer (Not Shown)			
	Roadside	S-29303-1	1	Steer axles only
	Curbside	S-29303-1	1	Steer axles only
2	**FRAME BRACKET**[1]			See L1266 Frame Bracket Parts List
3	**FRAME BRACKET C-CHANNEL**	A-1631-19	1	All models
4	**TRI-FUNCTIONAL® II BUSHING KIT**[2]	S-24691	2	Includes bushing, bushing tube spacers, round head bolt, prevailing torque hex nut, hardened washers and lube
5	**BUSHING TUBE SPACER**	S-21099	4	All models
6	**QUIK-ALIGN® PIVOT BOLT KIT**	S-24679	2	Includes round head bolt, hardened washers and prevailing torque hex nut
7	**ALIGNMENT COLLARS**			
	7a Eccentric	S-20925	2	Alignment hole is off center
	7b Concentric	S-20924	2	Alignment hole is centered
8	**BUSHING TUBE SPACER KIT**	S-26369	2	Includes round head bolt, hardened washers, prevailing torque hex nut and bushing tube spacers
9	**U-BOLT KIT**			
	9a 19.5" or Larger Tires	S-21140/4	4	Includes (1) stepped U-bolt and hardware; axle spacer is not needed
	9b 17.5" Tires	S-22894/4	4	Includes (1) flattened U-bolt and hardware; axle spacer is needed with flattened U-bolt
10	**AXLE SPACER**	S-20701	4	Axle spacer is not needed with stepped U-Bolt. For use with flattened U-bolt only. Must order with 9b.

1. Other options exist. Contact Hendrickson for assistance.
2. Bushing tool S-21307 is required to correctly re-bush the suspension.

NOTE: Identification tag can be found on the front of the roadside frame bracket or the inside of the curbside beam.

Picture shown may not resemble all models.

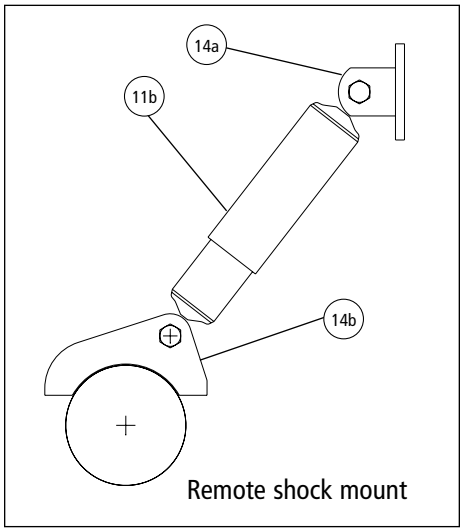

Remote shock mount

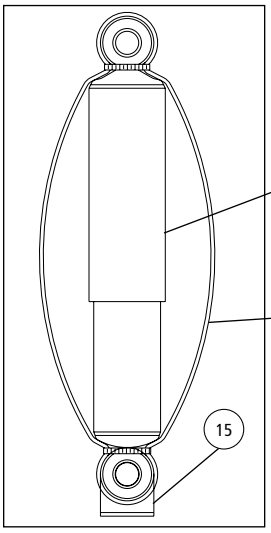

(Shock not included with shock strap kit)

Standard shock mount with shock strap

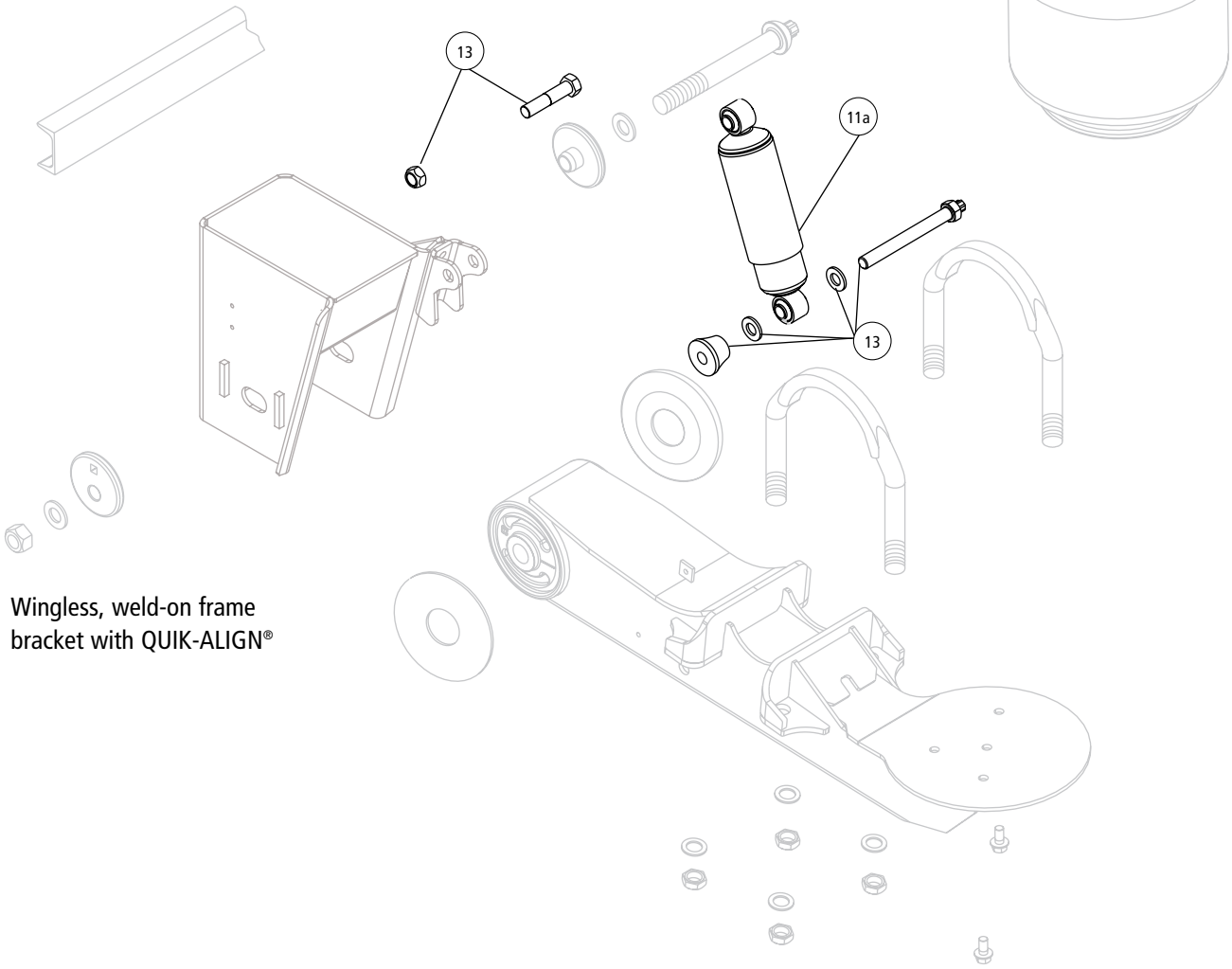

Wingless, weld-on frame bracket with QUIK-ALIGN®

11 & 12	SHOCK ABSORBERS AND SHOCK STRAP KITS				
	DESCRIPTION	SHOCK PART NO. (11)	QTY PER SUSP.	SHOCK STRAP KIT NO. (12)[3]	QTY PER SUSP.
a	**Standard Shock Mount**				
	Standard Travel				
	3.5" to 4" RH	S-23548	2	C-23086-11	1
	5.5" to 6.5" RH	S-23650	2	C-23086-3	1
	7.5" to 14" RH	S-23649	2	C-23086-5	1
	Standard Travel - High Damping				
	5.5" to 6.5" RH	S-23744	2	C-23086-10	1
	7.5" to 14" RH	S-23743	2	C-23086-5	1
	Limited Jounce				
	6.5" to 12" RH	S-23649	2	C-23086-5	1
	Limited Jounce - High Damping				
	6.5" to 12" RH	S-23743	2	C-23086-5	1
	Extended Rebound				
	6.5" RH	S-23651	2	C-23086-4	1
	Extended Rebound - High Damping				
	6.5" RH	S-24579	2	C-23086-8	1
b	**Remote Shock Mount** [4]				
	Standard Travel				
	5.5" to 6.5" RH	S-23650	2	S-14587-91	
	7.5" to 9" RH	S-23649	2	S-14587-10	1
	12" to 14" RH	S-2212	2	S-14587-31	
	Standard Travel - High Damping				
	5.5" to 6.5" RH	S-23744	2	S-14587-11	1
	7.5" to 9" RH	S-23743	2	S-14587-10	1
	Extended Rebound				
	6.5" to 9" RH	S-2212	2	S-14587-31	
	Extended Rebound - High Damping				
	6.5" to 9" RH	S-23316	2	S-14587-31	
c	**Angled and Frame Clearance Mounting** (Not Shown)				
	Standard Travel				
	6.5", 7.5" and 14" RH	S-23651	2	N/A	1
	Standard Travel - High Damping				
	6.5", 7.5" and 14" RH	S-24579	2	N/A	1

ITEM	DESCRIPTION	PART NO.	QTY. PER SUSP.	NOTE
13	**SHOCK BOLT KIT**			(1) Shock bolt is required per shock
	Standard Shock Mount	S-24024	2	
	Standard Shock Mount Lower	S-23642	2	
	Standard Shock Mount Upper	S-2157/2	1	
	Remote Shock Mount	S-2157/2	2	
14	**REMOTE SHOCK MOUNT**			Also order shock bolt kit S-2157/2
	Upper Assembly	A-5431	2	
	Lower Assembly	S-2723	2	
15	**SHOCK STRAP CLEVIS**	B-20919	2	Only needed for standard shock mount
			Included in shock strap kit	

3. Shock strap kits: includes (2) straps, (2) clevis and (4) nylon ties

4. Shock strap clevis not included and not needed for remote shock mount

NOTE: Identification tag can be found on the front of the roadside frame bracket or the inside of the curbside beam.

Picture shown may not resemble all models.

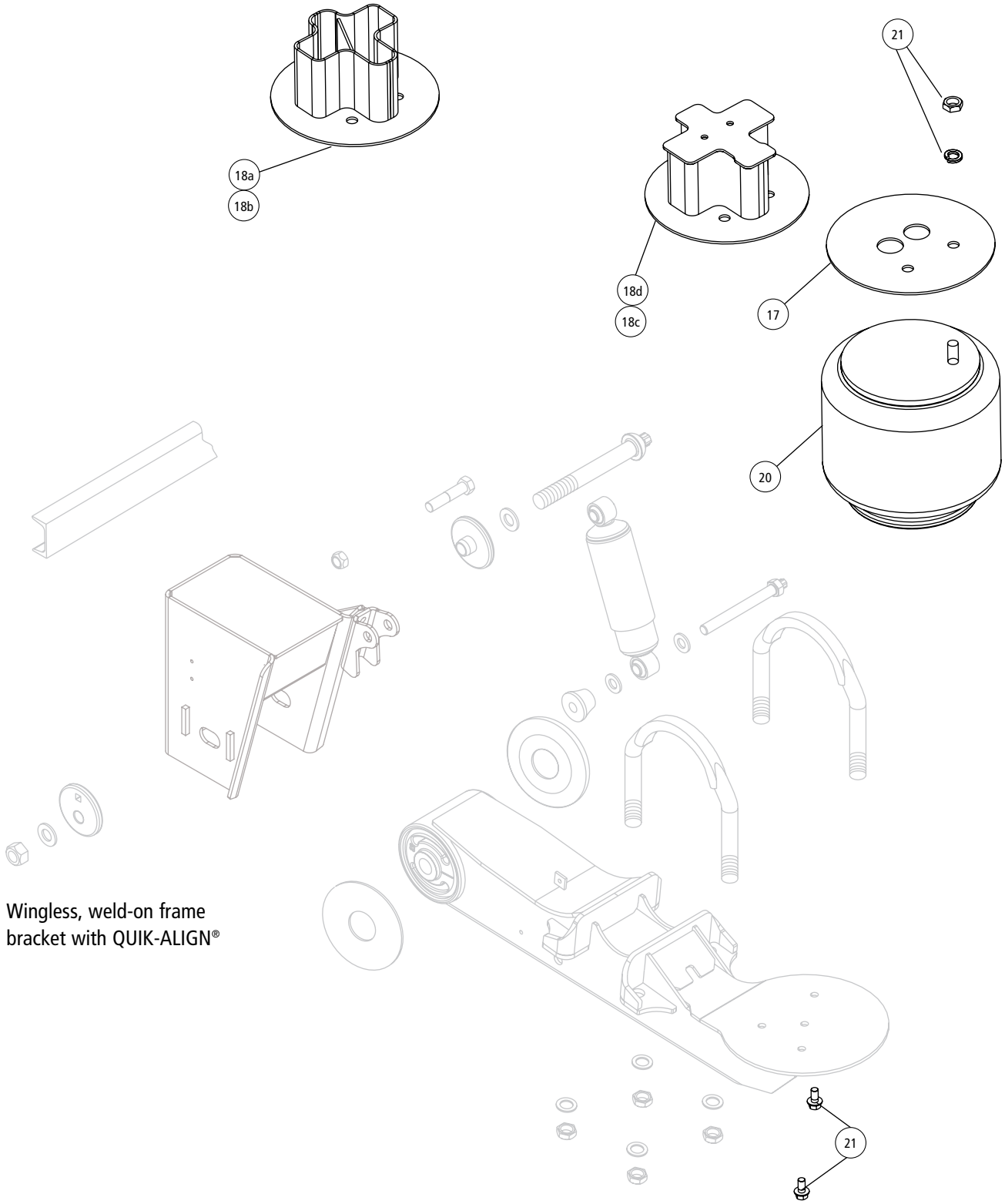

Wingless, weld-on frame bracket with QUIK-ALIGN®

ITEM	DESCRIPTION	PART NO.	QTY. PER SUSP.	NOTE
16	**UPPER SHOCK CLEVIS** (Not Shown)	S-2592	2	3.5" and 4" RH only
17	**AIR SPRING MOUNTING PLATE**			Air spring mounting plates fit standard and rotated mounting types
	Weld-on, Angled and Frame Clearance			
	3.5" to 14" RH	S-21209	2	
	Bolt-on			
	5.5" to 9" RH, Standard Travel	B-21211	2	
18	**AIR SPRING SPACER ASSEMBLY**[5]			Air spring spacers fit standard and rotated air spring mounting types. Includes air spring plate and spacer assembly.
	18a Weld-on, Standard Travel			
	12" RH	C-21210-3	2	With 3" spacer with top plate
	14" RH	C-21210-5	2	With 5" spacer with top plate
	18b Weld-on, Limited Jounce			
	6.5" and 7.5" RH	C-21210-1	2	With 1" spacer with top plate
	9" RH	C-21210-3	2	With 3" spacer with top plate
	12" RH	C-21210-5	2	With 5" spacer with top plate. Also on frame angled and frame clearance 14" RH
	18c Bolt-on, Standard Travel			
	12" RH	C-21215-3	2	With 3.2" spacer with top plate
	14" RH	C-21215-5	2	With 5.2" spacer with top plate
	18d Bolt-on, Limited Jounce			
	6.5" and 7.5" RH	C-21215-1	2	With 1.2" spacer with top plate
	9" RH	C-21215-3	2	With 3.2" spacer with top plate
	12" RH	C-21215-5	2	With 5.2" spacer with top plate
19	**AIR SPRING SPACER**[6] (Not Shown)	B-28662	2	For steer axle configurations only
20	**AIR SPRING**			
	Standard Mount			
	4" RH	S-20010	2	
	3.5" and 4" RH, High Pressure	S-20223	2	
	5.5" to 14" RH	S-20127	2	
	6.5" RH, High Pressure, Short Bellows	S-20716	2	
	7.5" to 14" RH, High Pressure	S-20124	2	
	Rotated Mount			
	5.5" to 14" RH	S-20414	2	
	7.5" to 14" RH, High Pressure	S-20413	2	
21	**AIR SPRING MOUNTING KIT**	S-20033/2		Order 1 kit per air spring

5. Other options exist. Contact your customer service representative for specific model numbers.
6. Used on all steerable configurations except when paired with bolt-on air spring mounting plate and space assembly.

NOTE: Identification tag can be found on the front of the roadside frame bracket or the inside of the curbside beam.

Picture shown may not resemble all models.

Wingless, weld-on frame bracket, welded alignment

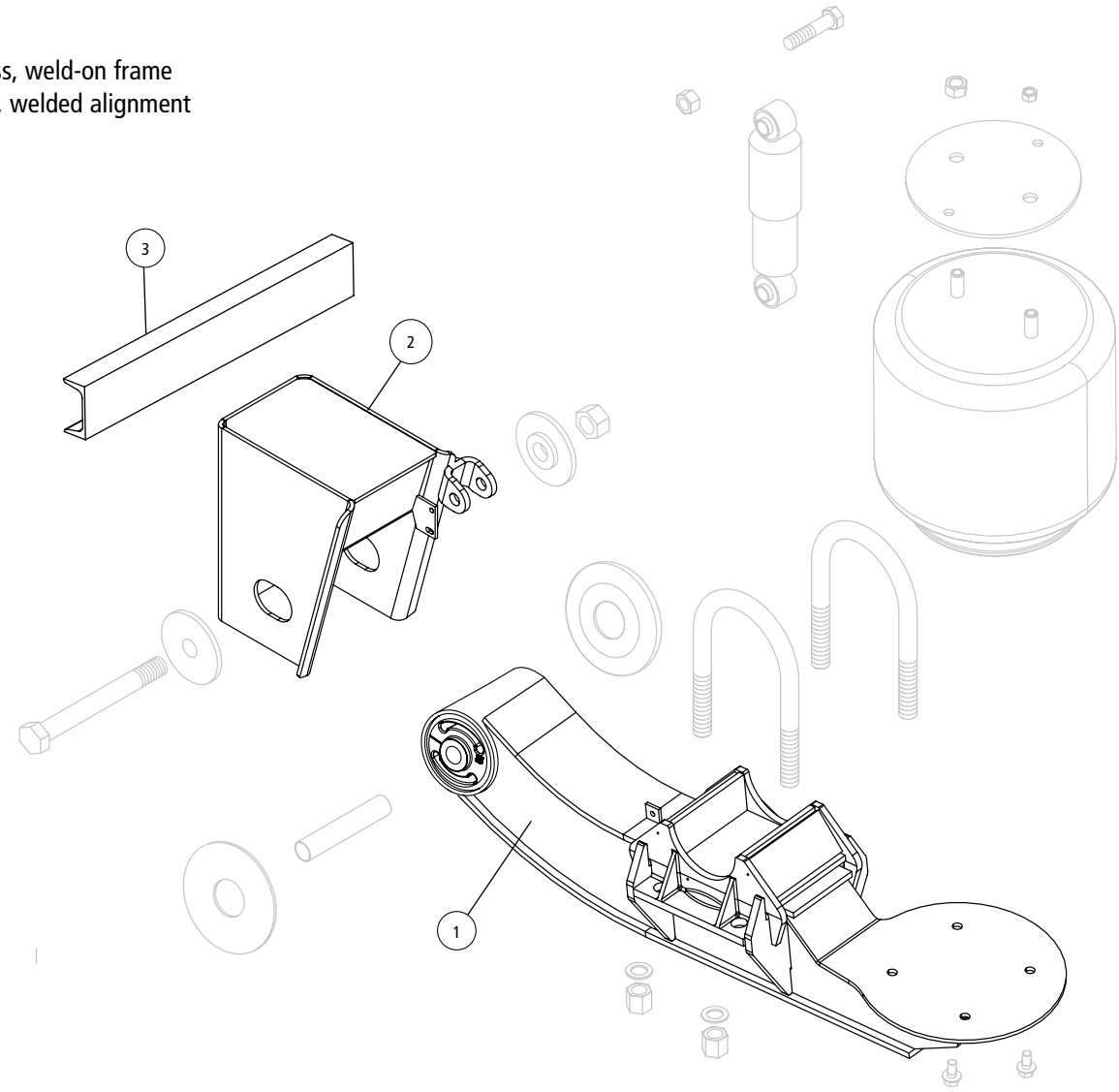

HT® Series Suspension Components

ITEM	DESCRIPTION	PART NO.	QTY. PER SUSP.	FITS MODELS HT300__ OR N-HT300__
1	**BEAM ASSEMBLY**[1]			
	Roadside	S-20252-1	1	All models
	Curbside	S-20252-2	1	All models
2	**FRAME BRACKET**[2]			See L1266 Frame Bracket Parts List
3	**FRAME BRACKET C-CHANNEL**	A-1631-19	1	All models
4	**FRAME BRACKET BRACE** (Not Shown)	B-2347-6	2	U-14-001 U-14-005 U-14-011 U-14-015 U-14-021 U-14-023 U-14-701 U-14-021 U-17-001 U-17-011 U-17-021 U-17-024 UB14-022

1. QUIK-ALIGN is available on certain specs. Contact Hendrickson for assistance.
2. Options exist based on frame attachment, frame bracket style, bolt hole pattern and connection. Contact Hendrickson for assistance or refer to L1266 Frame Bracket parts list.

NOTE: Identification tag can be found on the front of the roadside frame bracket or the inside of the curbside beam.

Picture shown may not resemble all models.

Wingless, weld-on frame bracket, welded alignment

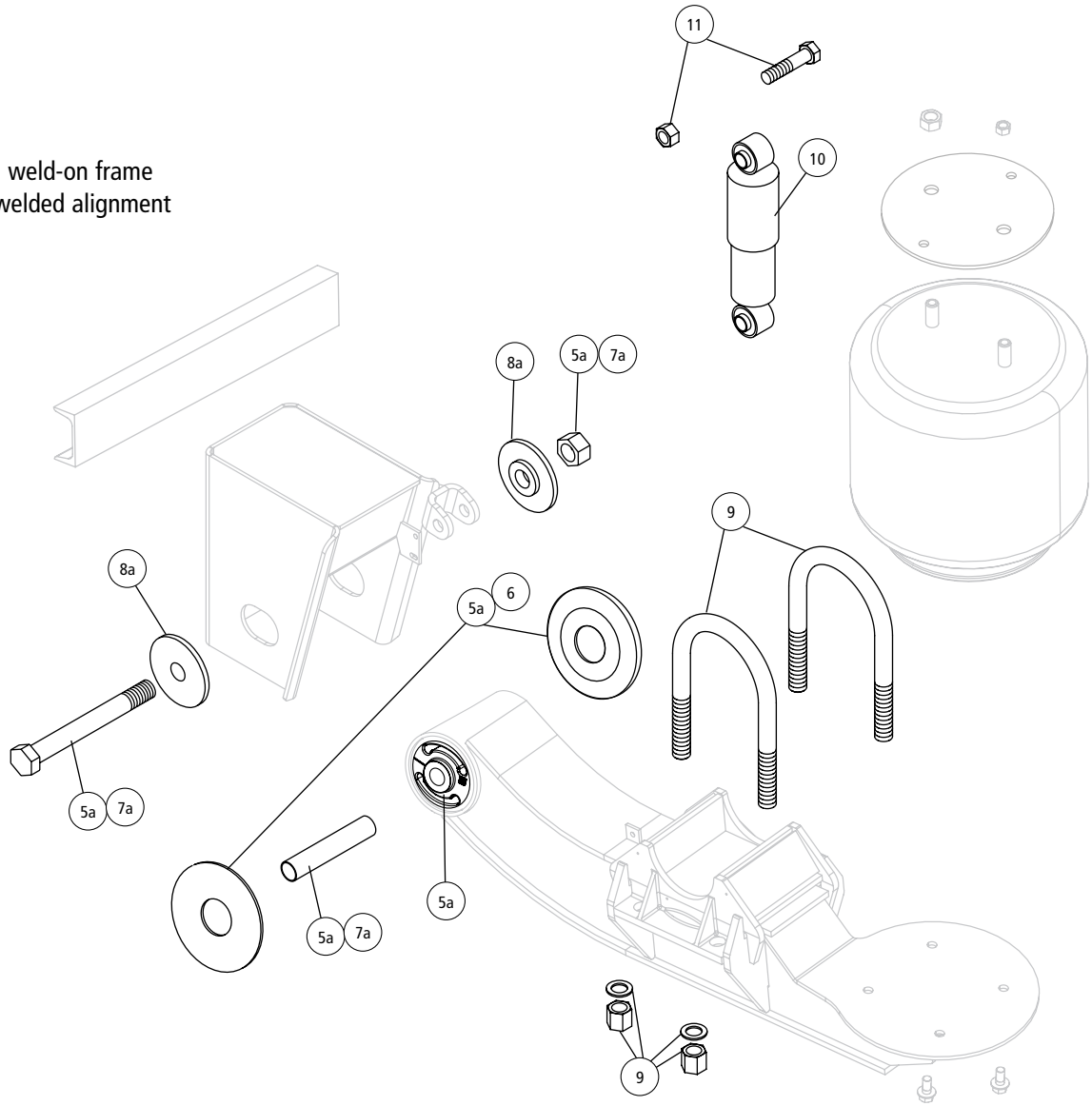

HT® Series Suspension Components

ITEM	DESCRIPTION	PART NO.	QTY. PER SUSP.	FITS MODELS HT300__ OR N-HT300__
5	**TRI-FUNCTIONAL® II BUSHING KIT[3]**			
	5a Welded Alignment	S-6914	2	Includes bushing, bushing tube spacers, cap screw, prevailing torque hex nut, liner and lube
	5b QUIK-ALIGN® (Not Shown)	S-24691	2	Includes bushing, bushing tube spacers, round head bolt, prevailing torque hex nut, hardened washers and lube
6	**BUSHING TUBE SPACER**	S-21099	4	All models
7	**PIVOT BOLT KIT**			
	7a Welded Alignment	S-3646	2	Includes cap screw, prevailing torque hex nut and liner
	7b QUIK-ALIGN (Not Shown)	S-24679	2	Includes round head bolt, hardened washers and prevailing torque hex nut
8	**ALIGNMENT COLLARS**			
	8a Welded Alignment	S-2770	4	Collars are welded to frame bracket
	8b Eccentric, QUIK-ALIGN (outer) (Not Shown)	S-20925	2	Alignment hole is off center
	8c Concentric, QUIK-ALIGN (inner) (Not Shown)	S-20924	2	Alignment hole is centered
9	**U-BOLT KIT**	S-3650/4	4	Includes (1) round U-bolt and hardware
10	**SHOCK ABSORBER**	S-20126	2	U-7.5-001 U-7.5-501 U-9-001 U-9-005 U-9-020 U-9-021 U-9-022 U-9-024 U-9-501 U-9-701 U-12-001 U-12-005 U-14-005 U-14-020 U-14-021 U-14-022 U-14-023 U-14-701 U-15-011 U-17-001 U-17-020 U-17-021 U-17-024 UB9-022 UB14-022
		S-21699	2	U-7.5-519 U-9-011 U-9-519
				U-12-011 U-12-015 U-14-011
				U-14-015 U-17-011
11	**SHOCK BOLT KIT**	S-2157/2	2	All models
12	**SHOCK STRAP KIT** (Not Shown)			Includes (4) nylon ties and (2) shock straps
		S-14587-8	1	Use with S-20126 shock
		S-14587-8	1	Use with S-21699 shock
13	**REMOTE SHOCK MOUNT** (Not Shown)			
	13a Upper Assembly (Not Shown)			
	Roadside Suspension	C-21797-1	1	U-17-020
	Curbside Suspension	C-21797-2	1	
	Roadside and Curbside Suspension	A-5431	2	U-9-021 U-12-020 U-14-020
	13b Lower Assembly (Not Shown)	S-2723	1	U-9-021 U-12-020 U-14-020

3. Bushing tool S-21307 is required to correctly re-bush the suspension

Picture shown may not resemble all models.

Wingless, weld-on frame bracket, welded alignment

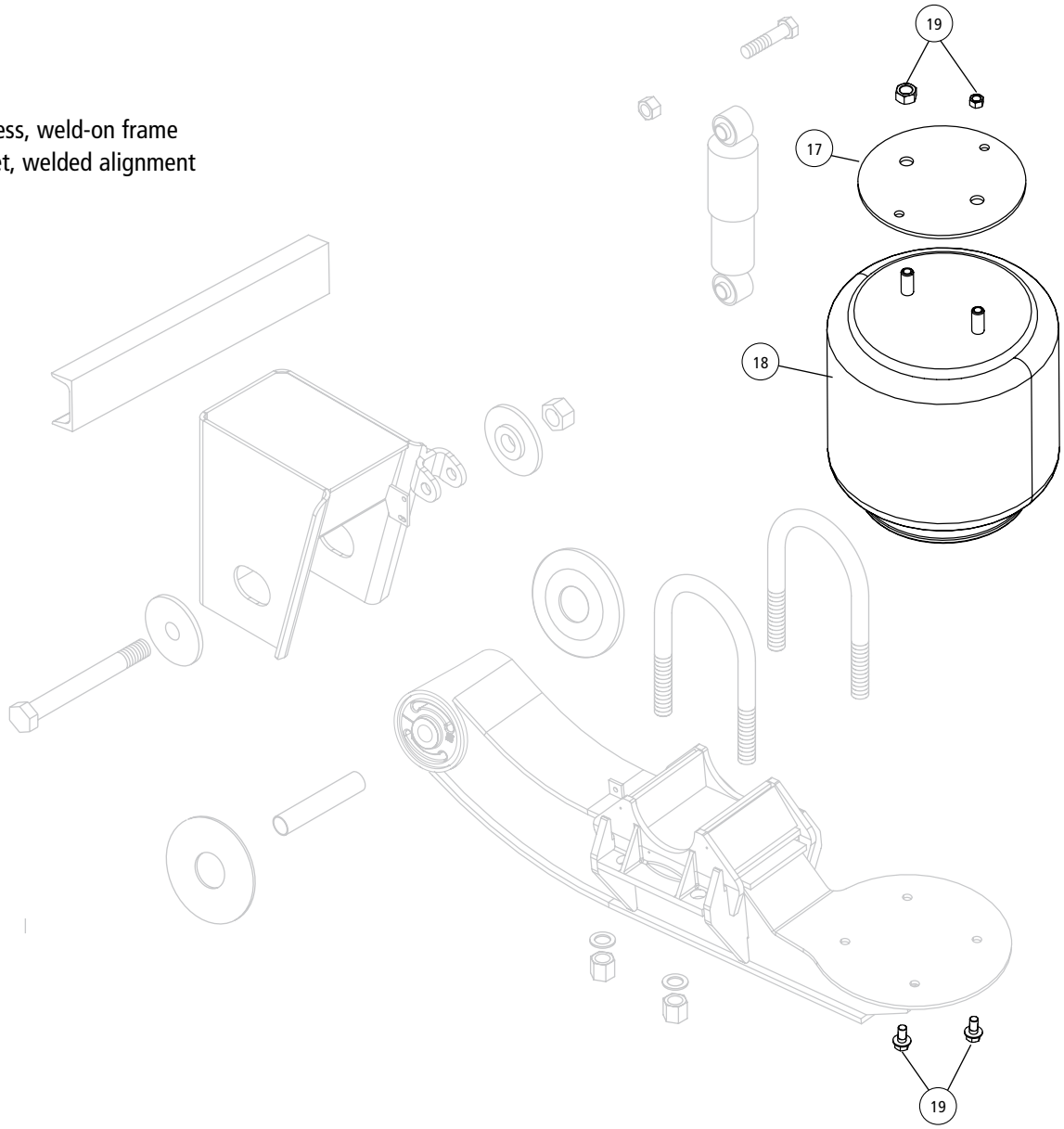

HT® Series Suspension Components

ITEM	DESCRIPTION	PART NO.	QTY. PER SUSP.	FITS MODELS HT300?_ OR N-HT300__		
16	**AIR SPRING SPACER ASSEMBLY**			Includes air spring plate and spacer assembly		
		A-20279	2	U-12-001	U-12-005	U-12-015
				U-12-024		
		C-24967	2	U-9-020	U-14-001	U-14-005
				U-14-011	U-14-015	U-14-020
				U-14-011	UB14-022	
		C-22514	2	U-15-011		
		C-24968	2	U-17-001	U-17-011	U-17-020
				U-17-024		
		C-24969	2	U-14-023		
17	**AIR SPRING PLATE**	A-24966	2	U-7.5-001	U-7.5-501	U-7.5-519
				U-9-001	U-9-005	U-9-011
				U-9-021	U-9-022	U-9-024
				U-9-501	U-9-519	U-9-701
				U-12-001	U-12-005	U-12-011
				U-12-020	UB9-022	
18	**AIR SPRING**	S-3830	2	Fits all models. Replaces S-22173		
19	**AIR SPRING MOUNTING KIT**	S-1981/2	2	U-7.5-001	U-7.5-501	U-7.5-519
				U-9-001	U-9-005	U-9-011
				U-9-020	U-9-021	U-9-022
				U-9-701	U-14-001	U-14-005
				U-14-011	U-14-015	U-14-020
				U-14-021	U-14-022	U-14-023
				U-14-701	U-15-011	U-17-001
				U-17-011	U-17-020	U-17-021
				UB9-022	UB14-022	
		S-20313/2	2	U-12-001	U-12-005	U-12-011
				U-12-015	U-12-020	U-12-024
20	**UNIVERSAL HEIGHT CONTROL VALVE** (Not Shown)	VS-227	1[4]	Fits all models. Includes height control valve, exhaust line fittings and spacer bracket		
21	**UNIVERSAL LINKAGE ASSEMBLY** (Not Shown)	S-14187	1[4]	Includes linkage assembly and hardware		
22	**DUMP VALVE** (Not Shown)	VS-23460	1[4]	Includes dump valve and fittings		
23	**PRESSURE PROTECTION VALVE** (Not Shown)	VS-1128	1	Includes valve only		

4. Quantities for air control components are per trailer

NOTE: Identification tag can be found on the front of the roadside frame bracket or the inside of the curbside beam.

Primary Fixed Suspension System

HT® Series Y-Beam

L1271 - Suspension Components 168

L58 - Suspension Components 170

Picture shown may not resemble all models.

HT300YB

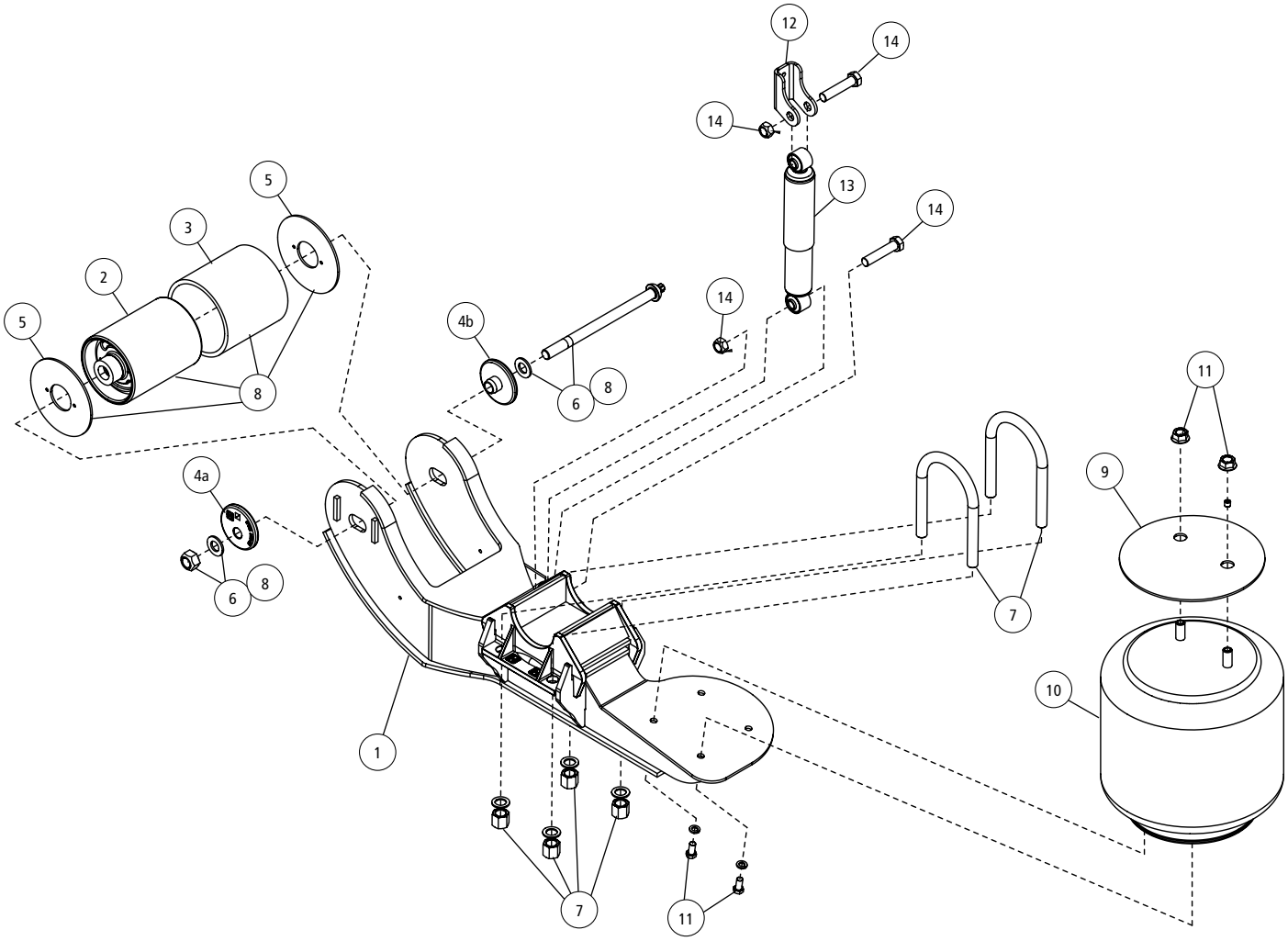

ITEM	DESCRIPTION	PART NO.	QTY.	NOTE
1	**BEAM ASSEMBLY**			
	Standard, roadside, QUIK-ALIGN®	S-31377-3	1	
	Standard, curbside, QUIK-ALIGN	S-31377-4	1	
2	**BUSHING ASSEMBLY**	S-30862	2	
3	**TUBE SLEEVE**	S-7342	2	
4	**ALIGNMENT COLLAR**			
	4a Eccentric washer, QUIK-ALIGN	S-20925	2	Bolt hole is offset from center of collar
	4b Concentric washer, QUIK-ALIGN	S-20924	2	Pivot bolt hole is center of collar
5	**BUSHING TUBE SPACER**	S-11613	4	
6	**QUIK-ALIGN PIVOT BOLT KIT**	S-25948	2	Includes shear-type bolt, nut & washers
7	**U-BOLT KIT, RD**	S-3650/4	4	
8	**TRI-FUNCTIONAL® II BUSHING KIT**	S-26000	2	Includes bushing assembly, bushing tube spacers, bolt & nut
9	**AIR SPRING PLATE**			
	HT300YB.XXXX	S-23294	2	
	HT300YB-XX-XXX	A-24966	2	
10	**AIR SPRING**			
	HT300YB.XXXX	S-25319	2	
	HT300YB-XX-XXX	S-3830	2	
11	**AIR SPRING BOLT KIT**			
	HT300YB.XXXX	S-25339/2	2	
	HT300YB-XX-XXX	S-1981/2	2	
12	**UPPER SHOCK CLEVIS**			
	HT300YB.XXXX	S-20113	2	
	HT300YB-XX-XXX	S-2592	2	
13	**SHOCK ABSORBER**	S-20002	2	
14	**SHOCK BOLT KIT**	S-2157/2	2	
15	**LOWER SHOCK CLEVIS** (Not Shown)			
	Standard, roadside	S-20145-1	1	
	Standard, curbside	S-20145-2	1	
16	**SHOCK STRAP KIT** (Not Shown)			
	For A-20002 shock absorber	S-14587-1	1	

NOTE: US/YB can be identified by Dual Combo Stud A/S & YB "dot number" YB.XXX

NOTE: UB/YB only consists of two part numbers HT300YB-7.5-001 or HT300YB-9-001

Picture shown may not resemble all models.

HT250U-Y / HT250YB

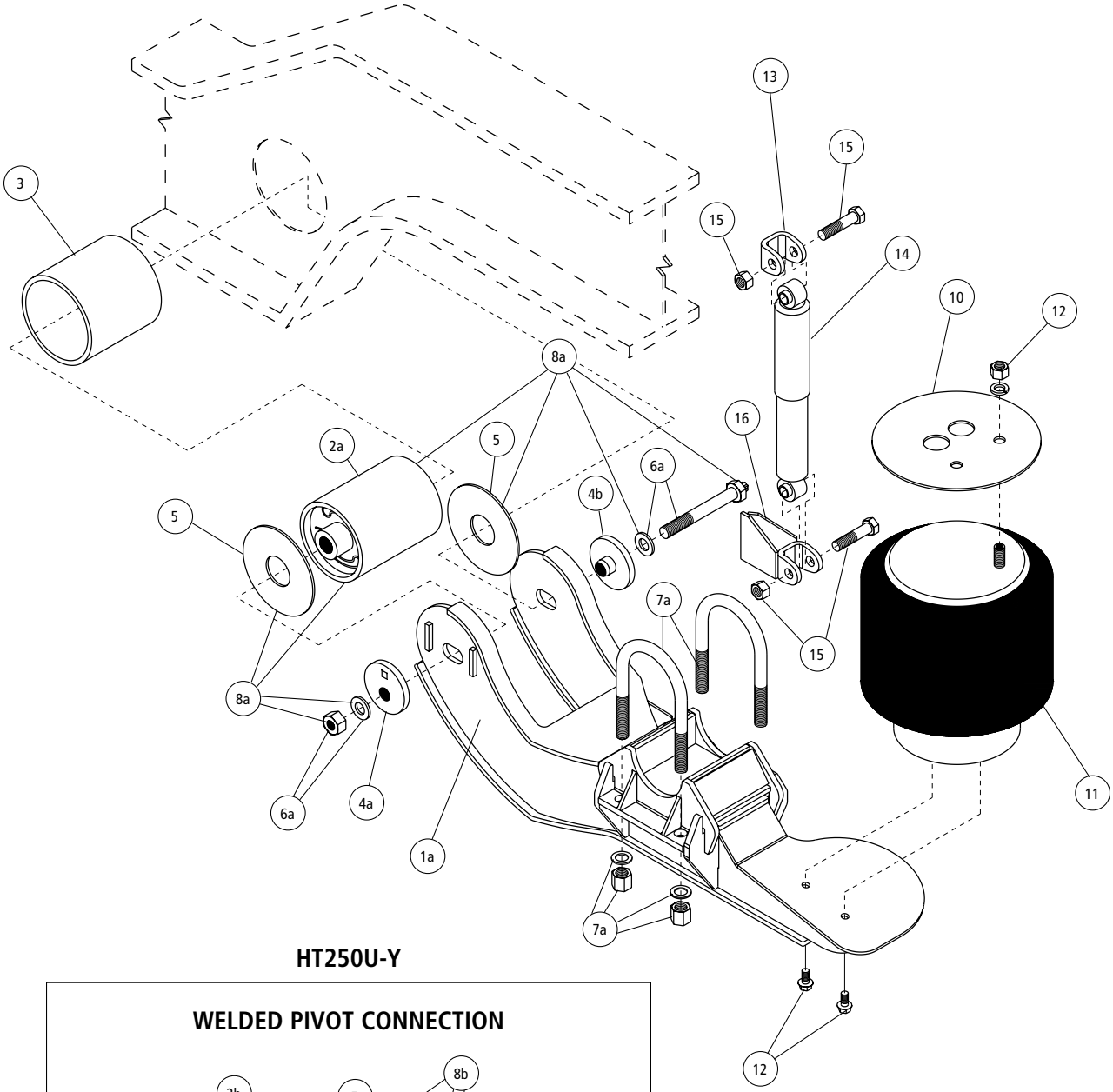

HT250U-Y

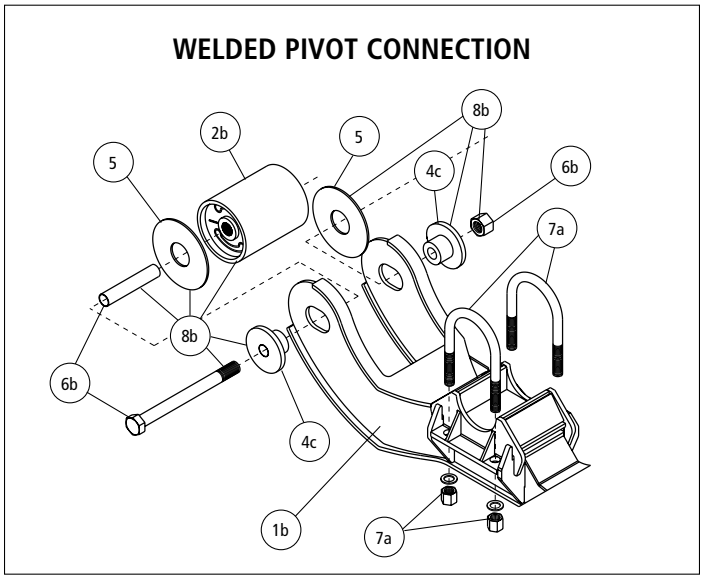

Picture shown may not resemble all models.

HT250YS

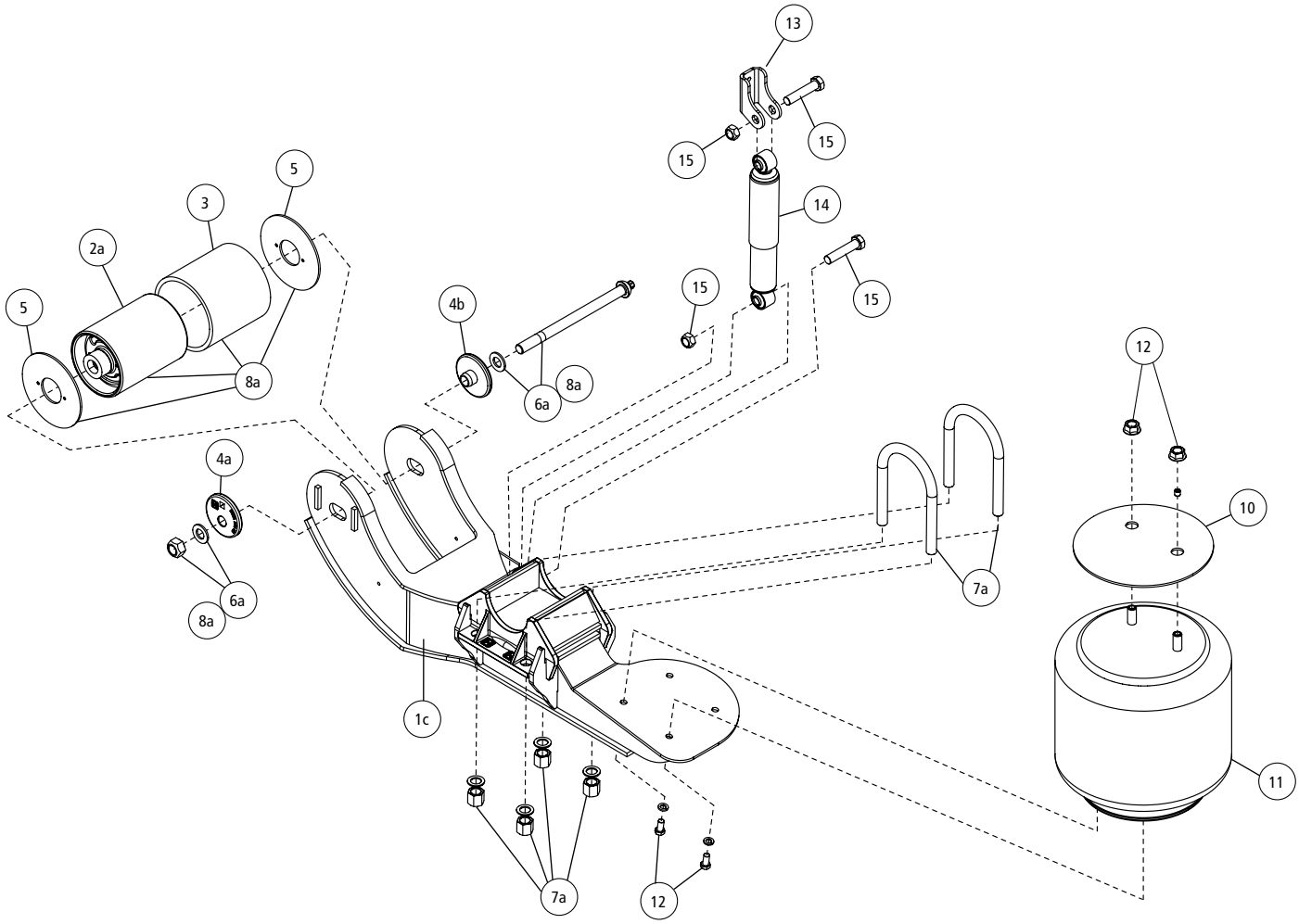

HT® Series Suspension Components

ITEM	DESCRIPTION	PART NO.	QTY. PER SUSP.	Model No. / Description
1	**BEAM ASSEMBLY**			
	1a Roadside, QUIK-ALIGN®	S-22350-3	1	HT250YB
	Curbside, QUIK-ALIGN	S-22350-4	1	HT250YB
	1b Roadside, welded alignment	S-21076-1	1	HT250U-Y
	Curbside, welded alignment	S-21076-2	1	HT250U-Y
	1c Roadside, QUIK-ALIGN	S-30873-1	1	HT250YS
	Curbside, QUIK-ALIGN	S-30873-2	1	HT250YS
2	**BUSHING ASSEMBLY**			
	2a Bushing assembly, QUIK-ALIGN	S-30862	2	HT250YB and HT250YS
	2b Bushing assembly, welded alignment	S-7343	2	HT250U-Y
3	**TUBE SLEEVE**	S-7342	2	All models
4	**ALIGNMENT COLLAR**			
	4a Eccentric washer, QUIK-ALIGN	S-20925	2	HT250YB and HT250YS; Offset pivot bolt hole
	4b Concentric washer, QUIK-ALIGN	S-20924	2	HT250YB and HT250YS; Centered pivot bolt hole
	4c Welded alignment	S-7349	4	HT250U-Y
5	**BUSHING TUBE SPACER**	S-21099	4	All models
6	**PIVOT BOLT KIT**			
	6a QUIK-ALIGN	S-25948	2	HT250YB and HT250YS; Includes shear-type bolt, nut and washer
	6b Welded alignment	S-7345	2	HT250U-Y; Includes bolt, nut and liner
7	**U-BOLT KIT**	S-3650/4	4	All models
	7a U-Bolt Kit, RD	S-3650/4	4	HT250U-Y and HT250YB
	7b Flattened U-Bolt / Spacer Kit (not shown)	A-22237	1	HT250YS with 12.25" brakes only
	7c U-Bolt Kit (not shown)	S-21140/4	4	HT250YS with 16.5" brakes only
8	**TRI-FUNCTIONAL® II BUSHING KIT**			
	8a QUIK-ALIGN	S-26000	2	HT250YB and HT250YS; Includes assembly, bushing tube spacers, bolt and nut
	8b Welded Alignment	S-13136	2	HT250U-Y; Includes alignment collars, bushing assembly, bushing tube spacers, bolt, nut and liner
9	**BUSHING TUBE SPACER KIT** (not shown)	S-26371		HT250U-Y; Includes bolt, nut, liner and bushing tube spacer
10	**AIR SPRING PLATE**	S-21209	2	All models

NOTE: Identification tag can be found on the front of the roadside frame bracket or the inside of the curbside beam.

ITEM	DESCRIPTION	PART NO.	QTY. PER SUSP.	Model No. / Description		
11	**AIR SPRING**					
		S-20127	2	HT250U	-6.5Y	-005, 006
					-9Y	-006, 031, 037, 706
				HT250YB	-6.5	-006, 031, 037
					-7.5	-006, 031, 037
					-9.0	-006, 031, 037
				HT25OYS	-006, 106	
	Rotated stud	S-20414	2	HT250U	-9Y	-010
				HT250YB	-6.5	-010
					-7.5	-010
					-9.0	-010
				HT250YS	-010, 011	
	High pressure, standard	S-20124	2	HT250U	-6.5Y	-001
					-9Y	-001,021,027
				HT250YB	-6.5	-001 021, 027
					-7.5	-001, 021, 027
					-9.0	-001, 021, 027
				HT250YS	-001, 101	
12	**AIR SPRING BOLT KIT**	S-20033/2	2	All models		
13	**UPPER SHOCK CLEVIS**					
	Standard	S-2592	2	All models except listed below		
	For use with shock straps (not shown)	S-20113	2	HT250U	-9Y	-021, 031
				HT250YB	-6.5	-021, 031
					-7.5	-021, 031
					-9.0	-021, 031
				HT250YS		
14	**SHOCK ABSORBER**					
	Standard	S-20002	2	HT250U	-6.5Y	-001, 006
					-7.5Y	-001, 006
					-9.0Y	-001, 006, 010, 021, 031, 706
				HT250YB	-6.5	-001, 006, 010, 021, 031
					-7.5	-001, 006, 010, 021, 031
					-9.0	-001, 006, 010, 021, 031, 706
	Standard	S-23651	2	HT250YS		
	Extended service, high damping	S-21553	2	HT250U	-9Y	-027, 037
				HT250YB	-6.5	-027, 037
					-7.5	-027, 037
					-9.0	-027, 037
	Remote shocks	S-23649	2	HT250YB	-7.5-DB2	
					-9-DB2	
15	**SHOCK ABSORBER BOLT KIT**					
		S-2157/2	2	HT250U-Y and HT250YB		
		S-31929/2	2	HT250YS		

ITEM	DESCRIPTION	PART NO.	QTY. PER SUSP.	Model No. / Description
16	**LOWER SHOCK CLEVIS**			
	Roadside	S-20145-1	1	All HT250U-Y and HT250YS except for remote mt. axle mount
	Curbside	S-20145-2	1	All HT250U-Y and HT250YS except for remote mt. axle mount
	Remote axle mount	S-2723	2	HT250YB -7.5-DB2 -9-DB2
17	**SHOCK STRAP KIT** (not shown)			Includes strap and nylon tie
	For S-20002 shock absorber	S-14587-1	1	
	For S-21553 shock absorber	S-14587-8	1	
	For S-23651 shock absorber	C-23086-4	1	

Slider Suspension System

ULTRAA-K®

L1237 - Suspension Components 176

L1266 - Frame Brackets 275

L751 - QUIK-DRAW® 371

L1055 - SURELOK® 375

L1182 - Vehicle Controls 302

L878 - Tire Pressure Control System 319

L1104 - Drum Brake Components 329

L949 - READY-TO-ROLL® Wheel-End Packages
& Air Disc Brake Components 337

SLIDER BOX ASSEMBLY

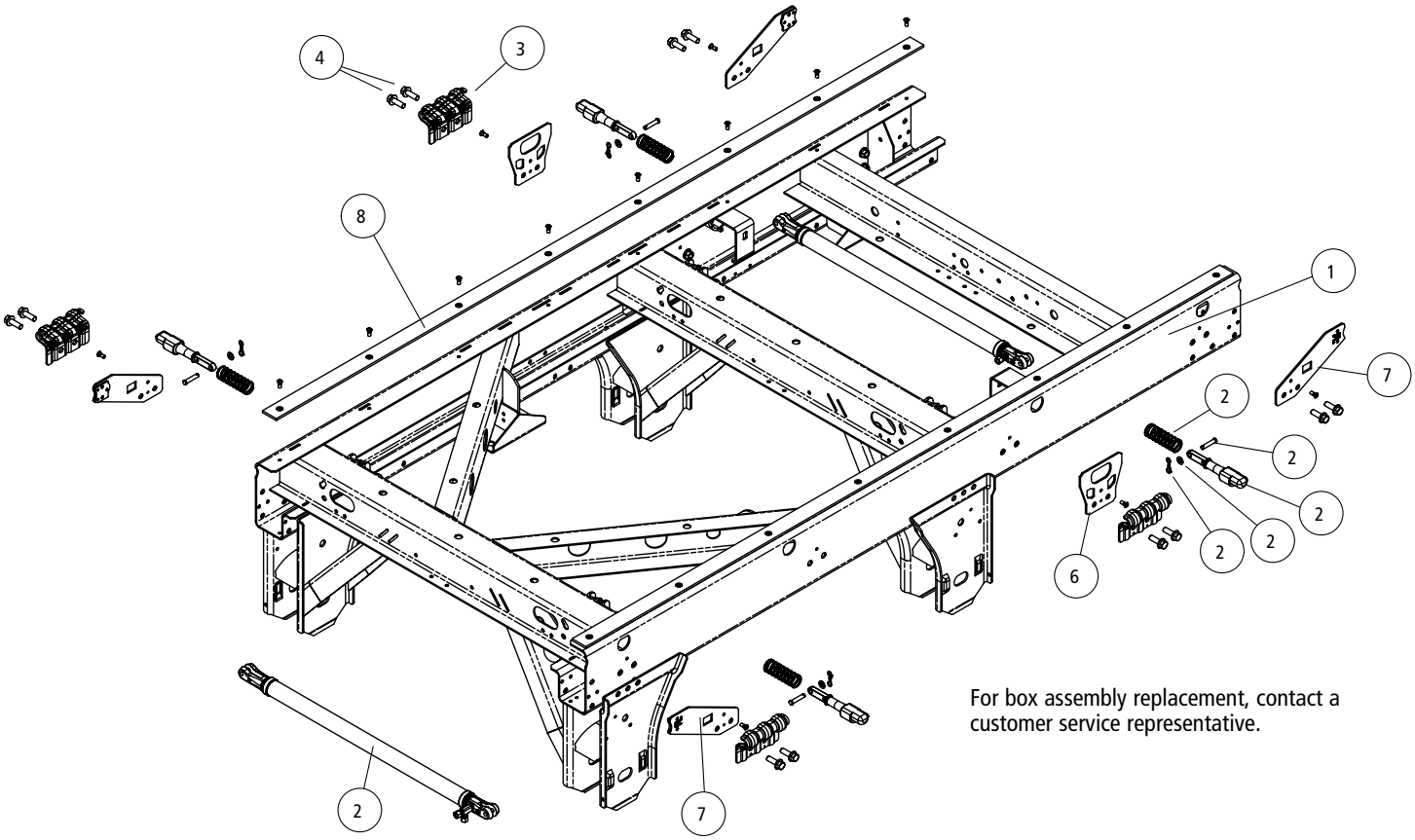

For box assembly replacement, contact a customer service representative.

MUD FLAP MOUNTING

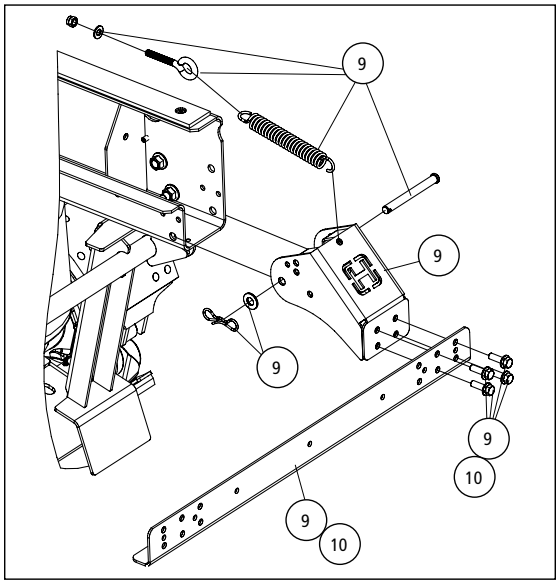

SLIDER BOX ASSEMBLY

ITEM	DESCRIPTION	PART NO.	SYSTEM QTY.	NOTE
1	**AFTERMARKET SLIDER BOX REPLACEMENT**	AMBOX.###	1	Contact Hendrickson for assistance
2	**QUIK-DRAW® COMPONENTS**			See L751 QUIK-DRAW Parts List
3	**BODY RAIL CLIP**			
	3.4" clip height	S-24459	4	Use with 4" hole centers
	3.8" clip height	S-24460	4	Use with 6" hole centers
4	**BODY RAIL BOLT**	SA-6900-2	8	1/2"-13" × 1-1/2" flanged bolt
5	**BODY RAIL CLIP SPACER** (Units built before August 2015) (not shown)			
	1.5" clip hole centers	A-21282	4	
	2" clip hole centers	A-22367	4	
6	**BOLT-ON SHIM**			
	.188" thickness	S-34860	4	6" body rail hole spacing
	.188" thickness	S-34860	2	4" body rail hole spacing
	.232" thickness	S-34859	4	6" body rail hole spacing
	.232" thickness	S-34859	2	4" body rail hole spacing
7	**BOLT-ON END STOP** (4" body rail hole spacing only)			
	.188" thickness	S-34821-1	2	Left front rail and right rear rail
	.188" thickness	S-34821-2	2	Right front rail and left rear rail
	.232" thickness	S-35761-1	2	Left front rail and right rear rail
	.232" thickness	S-35761-2	2	Right front rail and left rear rail
8	**SLIDER WEAR PAD KIT**	S-14342-3	2	Includes (1) slider wear pad with fasteners
9	**MUD FLAP BRACKET KIT**	S-34886	2	Includes (1) mud flap bracket assembly, (1) mud flap angle and hardware
10	**MUD FLAP ANGLE KIT**	S-35021	2	Includes (1) mud flap angle and hardware

Note: Identification can be found on the roadside slider box rail above the front frame bracket. There will also be a blank ULTRAA-K tag on the inside of the curbside beam.

SUSPENSION ASSEMBLIES

ZMD DOWN STOP BEFORE MARCH 2017 NO LONGER AVAILABLE

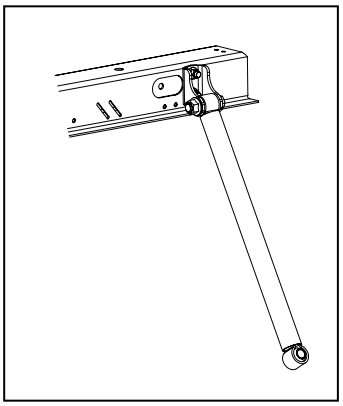

Note: Down stop mounted to shock clavis.

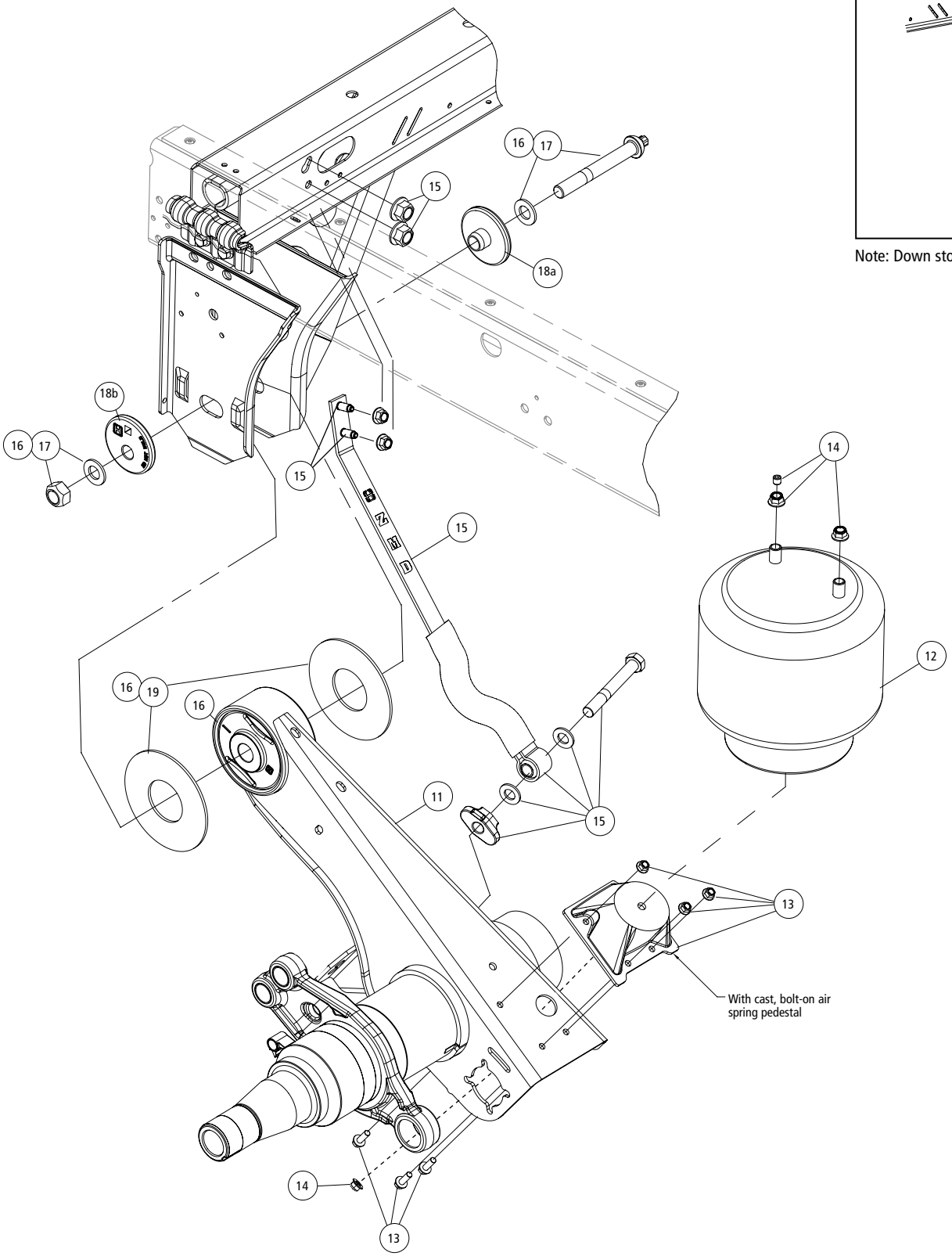

SUSPENSION ASSEMBLIES

ITEM	DESCRIPTION	PART NO.	SYSTEM QTY.	NOTE
11	**HALF-TRAAX AXLE/BEAM WELDMENT**	HTRAAX.###	2	Contact Hendrickson for assistance
12	**ZMD® AIR SPRING**[1]		4	
	Units built before March 2019	S-34733	4	Straight piston
	Units built after March 2019	S-38000	4	Flared piston
13	**CAST AIR SPRING PEDESTAL KIT**	S-27447-1	2	2" pedestal; includes left and right side pedestals and fasteners
14	**AIR SPRING MOUNTING KIT** (per air spring)	S-22619/2	4	16" ride height
15	**ZMD DOWN STOP KIT**	S-40231-1	4	Includes down stop and hardware; Use this kit if replacing an old style downstop
16	**TRI-FUNCTIONAL® PIVOT BUSHING KIT**[2]	S-26321	2	Includes (2) bushings, (2) pivot bolt kits, (4) bushing tube spacers and lubricant pack
17	**QUIK-ALIGN® PIVOT BOLT KIT**	S-24705	4	Contains 7" bolt, nut and hardened washers
18	**QUIK-ALIGN ALIGNMENT COLLARS**			
	18a Concentric (inner)	S-20924	4	Pivot bolt hole is centered
	18b Eccentric (outer)	S-20925	4	Pivot bolt hole is offset from center
19	**BUSHING TUBE SPACER**	S-26807	8	Inner metal outer diameter dimension of TRI-FUNCTIONAL Bushing is 2.6"; Inner hole dimension of BTS 2.95"
20	**AIR TANK BRACKET KIT** (not shown)			
		S-34883	1	1 (2) air tank brackets, (4) hex flange scews and (4) prev-torq hex flange nuts
		S-34883/2	2	(1) air tank bracket, (2) hex flange scews and (2) prev-torq flange nuts
21	**HEIGHT CONTROL VALVE KITS** (not shown)			See L1182 Control Parts Catalog
	Valves with fittings	VS-33704-3	1	
	HCV with dump	VS-33705-3	1	
	HCV with DST®	VS-33703-3	1	
	Link and valves with fittings	VS-33704-1	1	
	HCV with dump	VS-33705-1	1	
	HCV with DST	VS-33703-1	1	
22	**FIXED LINK ASSEMBLY**[3] (not shown)	VS-33702-1	1	
23	**SHOCK SPACER** (not shown)	S-27196	4	Included in down stop kit

1. If replacing S-34733 ZMD air spring with S-38000, all air springs on the suspension must be changed to S-38000 ZMD air spring.
2. Bushing tool S-24736 is required to correctly rebush the suspension.
3. Also included in HCV kits.

OTHER PARTS LISTS

More information can be found in the following documents

Lit. Number	Description
L1055	SURELOK® Parts List
L1102	Slider Accessories and Axle Components Parts List
L949	Wheel-Ends & Brakes Parts List
L589	TRI-FUNCTIONAL® Bushing Replacement Tool
L1104	Brake Kits and Components Parts List

Slider Suspension System

VANTRAAX® HKANT 40K

L649 - Suspension Components 181

L1102 - Slider Accessories 385

L1266 - Frame Brackets 275

L1287 - Shocks 294

L751 - QUIK-DRAW® 371

L1055 - SURELOK® 375

L1182 - Vehicle Controls 302

L878 - Tire Pressure Control System 319

L1104 - Drum Brake Components 329

L949 - READY-TO-ROLL® Wheel-End Packages
& Air Disc Brake Components 337

SLIDER BOX ASSEMBLY

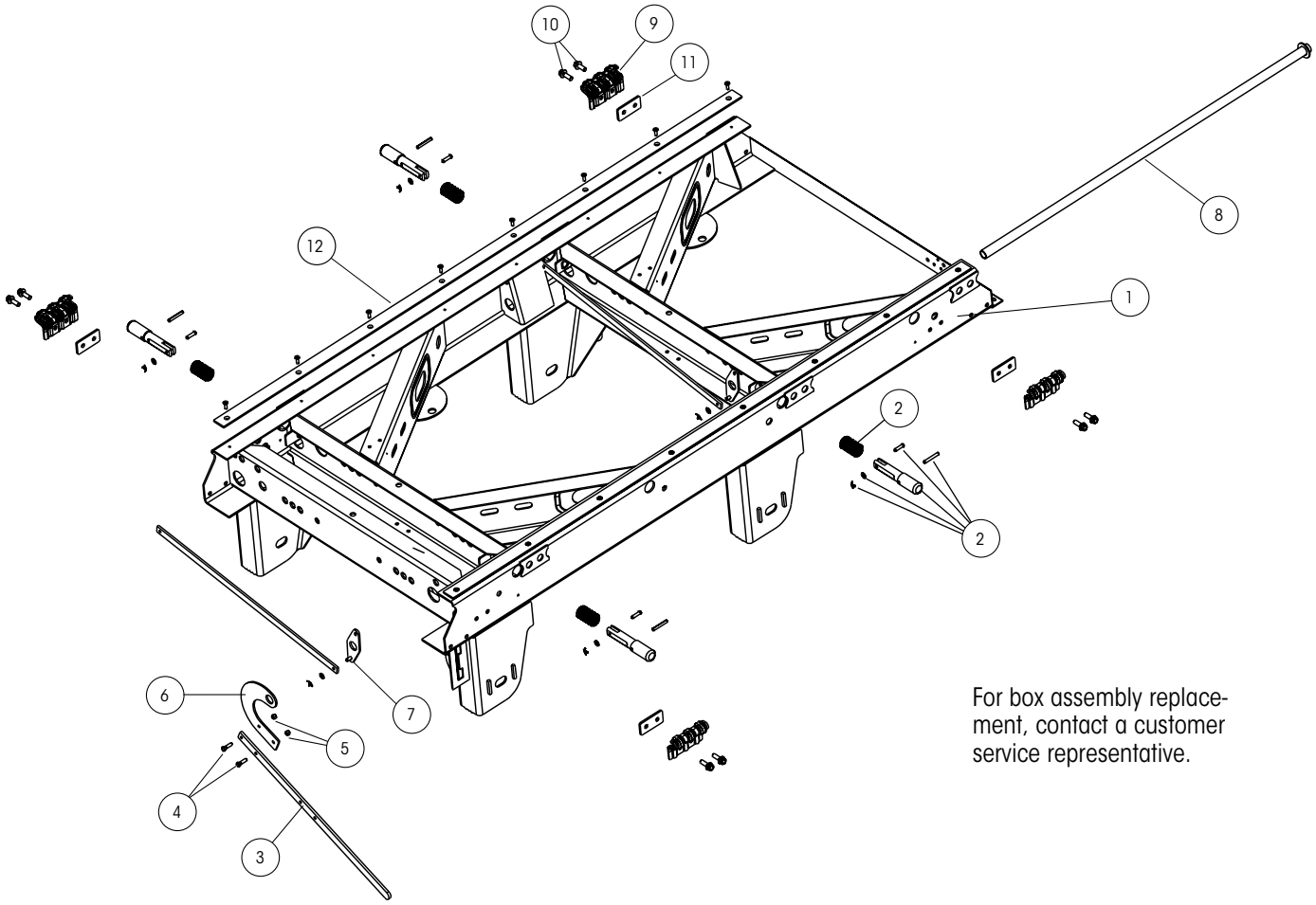

For box assembly replacement, contact a customer service representative.

RELEASE MECHANISM

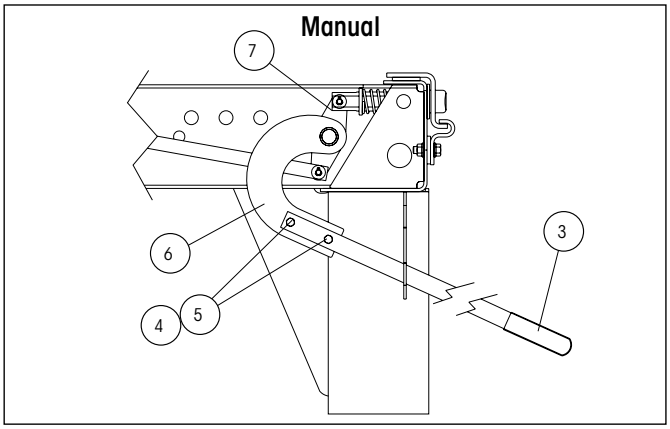

SLIDER BOX ASSEMBLY

ITEM	DESCRIPTION	PART NO.	SYSTEM QTY.	NOTE
1	**AFTERMARKET SLIDER BOX REPLACEMENT**	AMBOX.###	1	Contact Hendrickson for assistance
2	**QUIK-DRAW® COMPONENTS**			See L751 QUIK-DRAW Parts List
3	**HANDLE ASSEMBLY**			Manual
		B-22923	1	4 holes
		B-21505	1	2 holes
4	**HANDLE BOLT**	SA-1100-10	2	2-3/8"-16 × 1-1/4" hex head bolt, grade 5
5	**HANDLE NUT**	SA-9000-5	2	2-3/8"-16 lock nut, grade B
6	**HANDLE MOUNT**	C-21275	1	Manual
7	**CRANK ARM WELDMENT**	B-33010	2	For front and rear of slider box
8	**PIPE WELDMENT**	S-21433	1	Manual
9	**BODY RAIL CLIP**			
	3.4" clip height	S-24459	4	Use with 4" hole centers and 1.625" locking pin
	3.8" clip height	S-24460	4	Use with 6" hole centers and 1.375" locking pin
10	**BODY RAIL BOLT**	SA-6900-2	8	1/2"-13" × 1-1/2" flanged bolt
11	**BODY RAIL CLIP SPACER**			
	1.5" clip hole centers	A-21282	4	
	2" clip hole centers	A-22367	4	
12	**SLIDER WEAR PAD KIT**	S-14342-3	2	Includes (1) slider wear pad and (8) screws

Note: Identification can be found on the roadside slider box rail above the front frame bracket there will also be a blank VANTRAAX tag on the inside of the curbside beam

SUSPENSION ASSEMBLIES

Frame Bracket Assembly

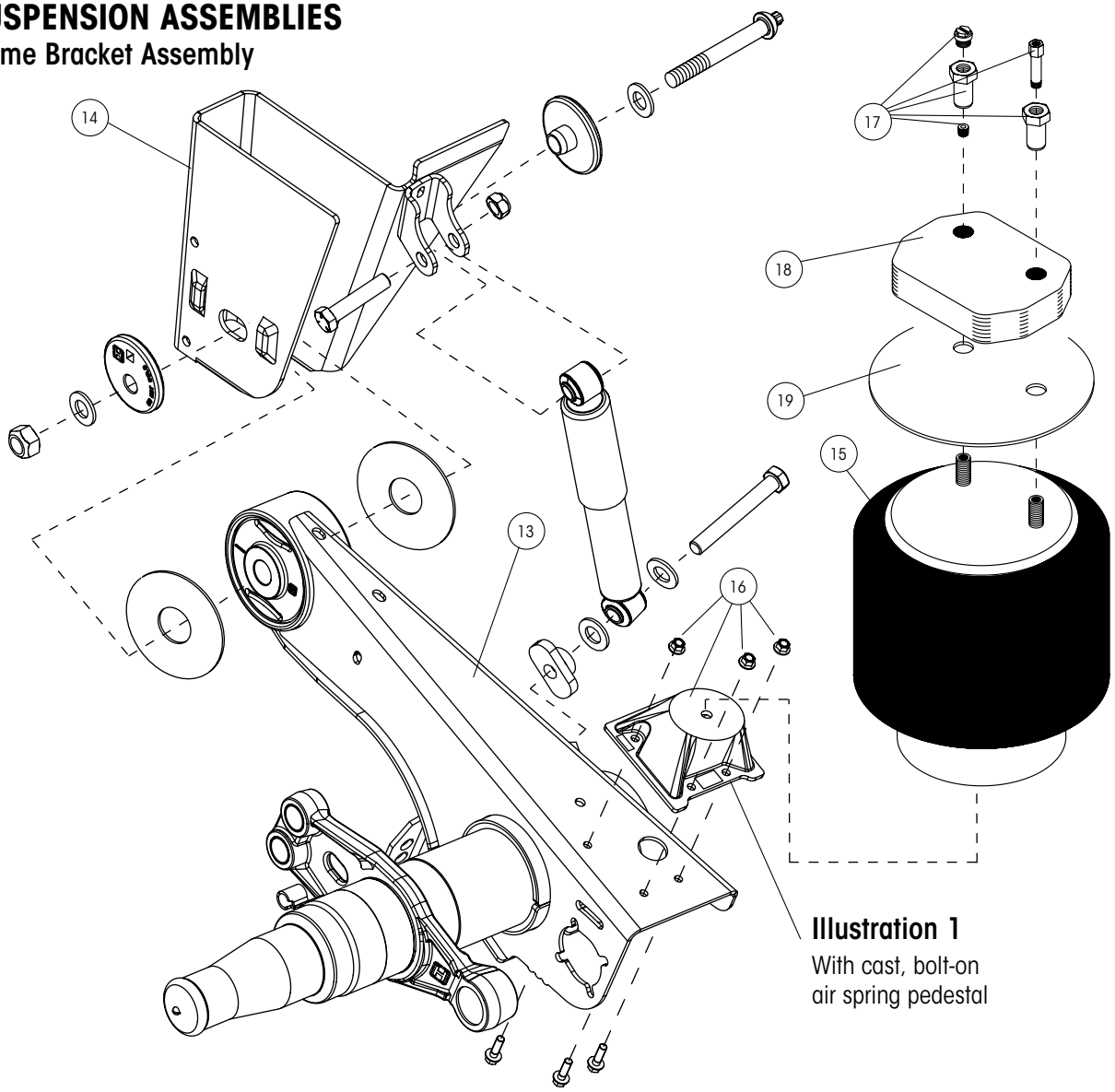

Illustration 1
With cast, bolt-on air spring pedestal

Manufactured Late August 2002 Through 2008

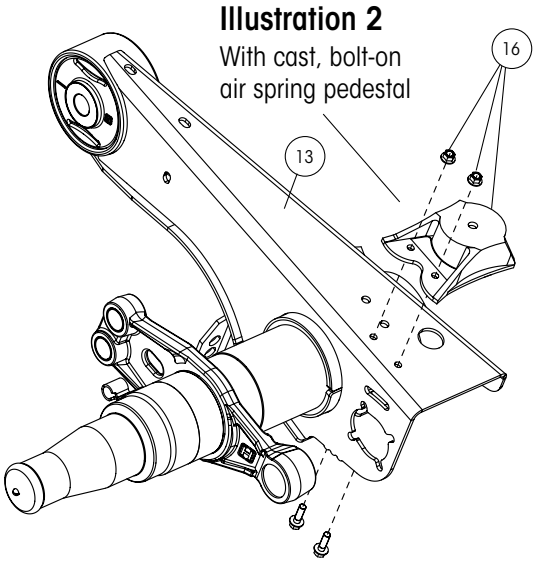

Illustration 2
With cast, bolt-on air spring pedestal

Manufactured 2001 Through 2002

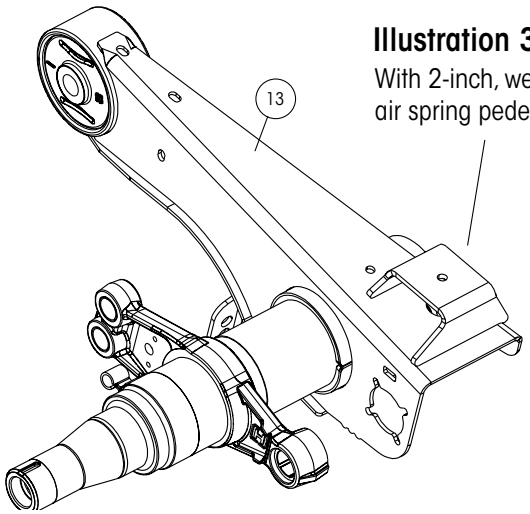

Illustration 3
With 2-inch, weld-on air spring pedestal

SUSPENSION ASSEMBLIES

ITEM	DESCRIPTION	PART NO.	SYSTEM QTY.	NOTE
13	**AXLE/BEAM WELDMENT**	HTRAAX.###	2	Contact Hendrickson for assistance
14	**FRAME BRACKET**			See L1266 Frame Bracket Parts List
15	**AIR SPRING**			
	Shipped prior to January 2008	S-22948	4	Replaces C-22948 and C-21966 16" ride height and above
	Shipped after January 2008	S-28929	4	
16	**CAST AIR SPRING PEDESTAL KIT[1] -** When model includes a cast, bolt-on pedestal under the air spring. (Illustration 1 and 2)			
				Includes 2 pedestals, 6 nuts and 6 screws
	16" ride height	S-27447-1	2	2" pedestal
	16.5" ride height	S-27447-2	2	2.57" pedestal
	14" ride height and 17" ride heights	S-27447-3	2	3.17" pedestal
	15", 15.5", 18" and 19" ride heights	S-27447-4	2	3.91" pedestal
17	**AIR SPRING MOUNTING KIT** (per air spring)			
	WITH 2" WELD-ON AIR SPRING PEDESTAL - When model includes a 2" weld-on pedestal under the air spring. (Illustration 3)			
	14" and 18" ride heights	S-22635/2	4	
	15" and 19" ride heights	S-22631/2	4	
	15.5" ride height	S-22632/2	4	
	16", 16.5" and 17" ride heights	S-22619/2	4	
	WITH CAST AIR SPRING PEDESTAL - When model includes a cast, bolt-on pedestal under the air spring. (Illustration 1 and 2)			
	14"-18" ride heights	S-22619/2	4	
	19" ride height	S-22630/2	4	
18	**AIR SPRING SPACER**			
	WITH 2" WELD-ON AIR SPRING PEDESTAL - When model includes a 2" weld-on pedestal under the air spring. (Illustration 3)			
	14" and 16.5" ride heights	B-22510-4	4	3/4" thick spacer
	15.5" ride height	B-22510-2	4	
	16.5" and 18" ride heights	B-22510-4	4	Requires both the 3/4" and 1-7/8" spacer
	15" and 18" ride heights	B-22510-2	4	1-7/8" thick spacer
	17" ride height	B-22510-1	4	1-1/8" thick spacer
	19" ride height	B-22510-3	4	3-1/8" thick spacer
	WITH CAST AIR SPRING PEDESTAL - When model includes a cast, bolt-on pedestal under the air spring. (Illustration 1 and 2)			
	19" ride height	B-22510-1	4	1-1/8" thick spacer
19	**AIR SPRING MOUNTING PLATE**	S-27042	4	15.5" ride height only

1. The 3-bolt pedestal (Illustration 1) replaces the 2-bolt pedestal (Illustration 2). Drilling instructions are provided by Hendrickson.

Note: Identification can be found on the roadside slider box rail above the front frame bracket there will also be a blank VANTRAAX tag on the inside of the curbside beam.

SUSPENSION ASSEMBLIES

Frame Bracket Assembly

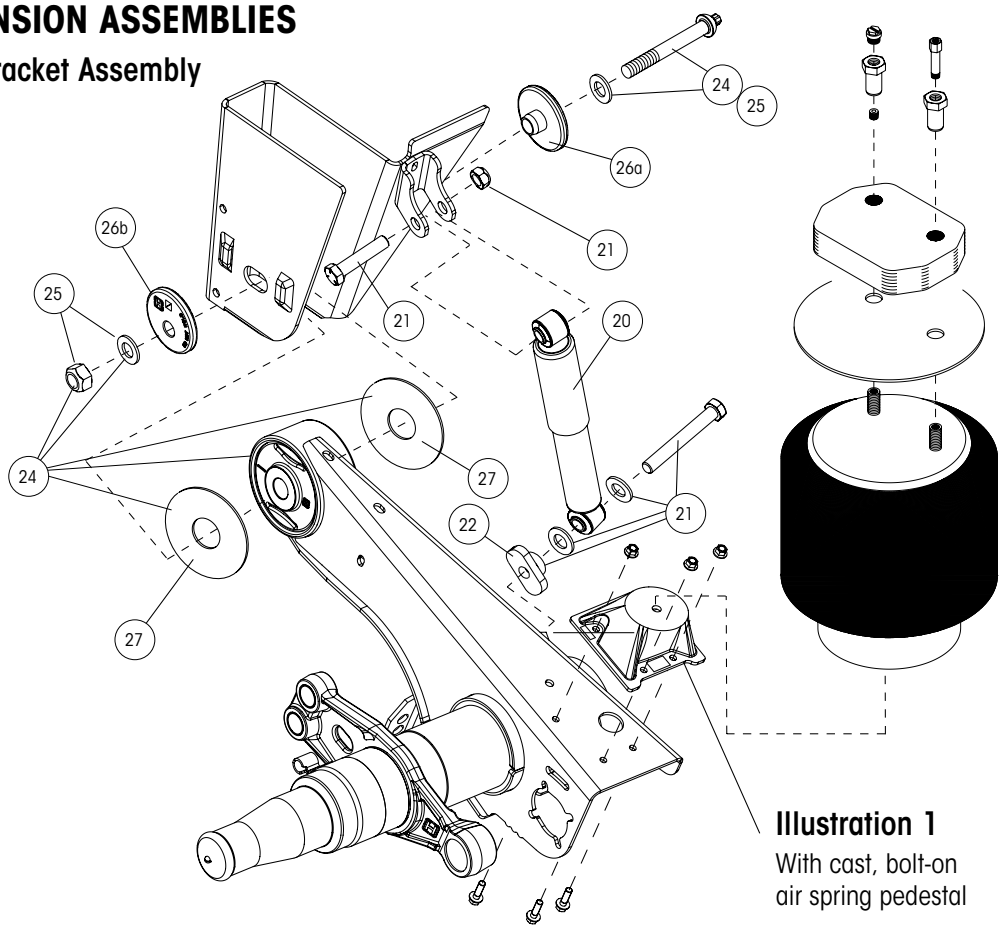

Illustration 1
With cast, bolt-on air spring pedestal

ZMD® Technology

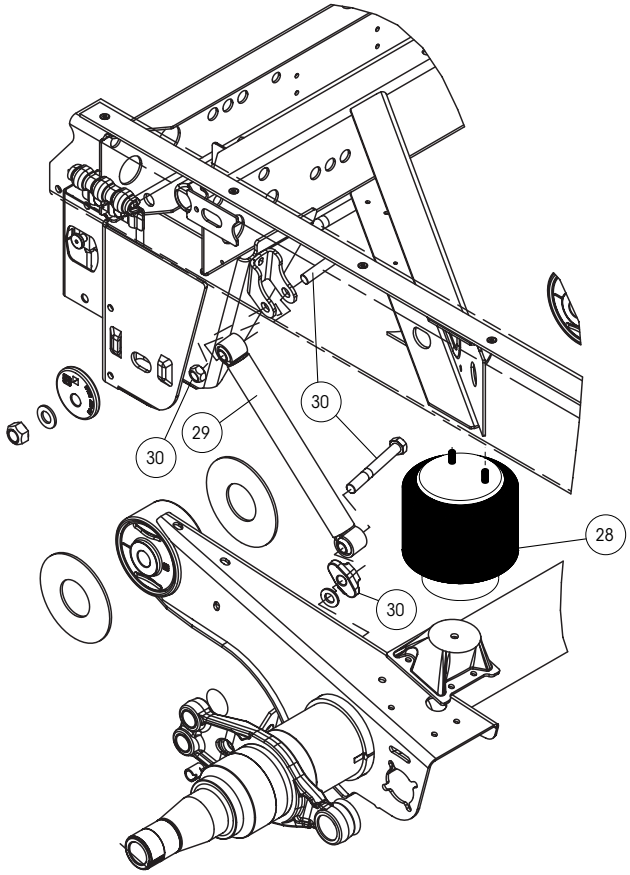

SUSPENSION ASSEMBLIES

ITEM	DESCRIPTION	PART NO.	SYSTEM QTY.	NOTE
20	**SHOCK ABSORBER**	S-24088	4	
21	**SHOCK BOLT KIT**	S-24049/2	4	Includes shear bolt, spacer, washers, hex bolt and hex nut
22	**SHOCK SPACER**	S-27196	4	
23	**SHOCK STRAP KIT** (Not shown)	C-23086-1	4	Includes (2) strap, (2) clevis and (4) ties
24	**TRI-FUNCTIONAL® PIVOT BUSHING KIT**[2]	S-26321	2	Includes (2) bushings, (2) pivot bolt kits, (4) bushing tube spacers and lubricant pack
25	**QUIK-ALIGN® PIVOT BOLT KIT**	S-24705	4	Contains 7" bolt, nut and hardened washers
26	**QUIK-ALIGN ALIGNMENT COLLARS**			
	26a Concentric (inner)	S-20924	4	Pivot bolt hole is centered
	26b Eccentric (outer)	S-20925	4	Pivot bolt hole is offset from center
27	**BUSHING TUBE SPACER**	S-26807	8	Inner metal outer diameter dimension of TRI-FUNCTIONAL Bushing is 2.6"; Inner hole dimension of BTS 2.95"

ZMD® ZERO MAINTENANCE DAMPING® COMPONENTS

ITEM	DESCRIPTION	PART NO.	SYSTEM QTY.	NOTE
28	**ZMD® AIR SPRING**			
	Units built before August 2020	S-33161	4	Steel piston
	Units built after August 2020	S-34733	4	Composite piston
29	**ZMD DOWNSTOP**	S-33669	4	
30	**ZMD DOWNSTOP BOLT KIT**	S-24049/2	4	Includes shear bolts, spacers, washers, hex bolt and hex nut
31	**ZMD RETROFIT KIT** (Not shown)			Contact Hendrickson for assistance

2. Bushing tool S-24736 is required to correctly rebush the suspension

Note: Identification can be found on the roadside slider box rail above the front frame bracket there will also be a blank VANTRAAX tag on the inside of the curbside beam

Slider Suspension System

VANTRAAX® HKANT 46K

L890 - Suspension Components 188

L1102 - Slider Accessories 385

L1266 - Frame Brackets 275

L1287 - Shocks 294

L751 - QUIK-DRAW® 371

L1055 - SURELOK® 375

L1182 - Vehicle Controls 302

L878 - Tire Pressure Control System 319

L1104 - Drum Brake Components 329

L949 - READY-TO-ROLL® Wheel-End Packages
& Air Disc Brake Components 337

SLIDER BOX ASSEMBLY

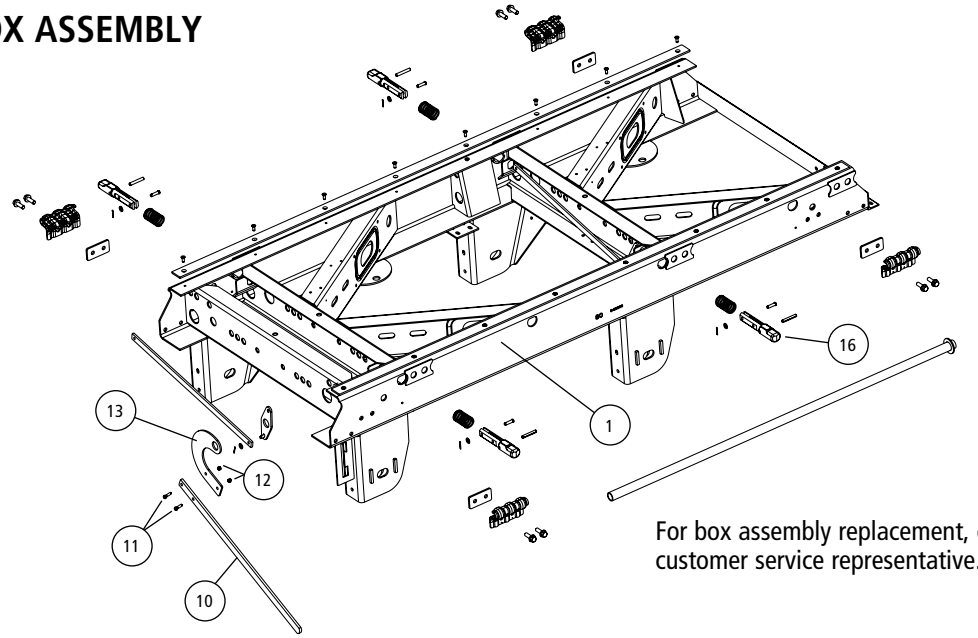

For box assembly replacement, contact a customer service representative.

SLIDER PINS

Units built in Sept. 2012 and after

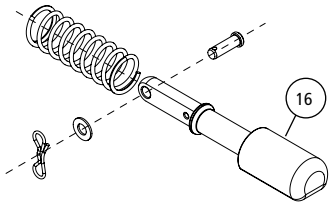

Units built before Sept. 2012

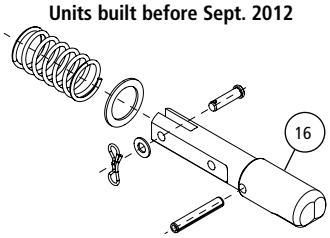

QUIK-DRAW® ACTUATOR ENDS

CAST IRON
Units built before Feb. 2015

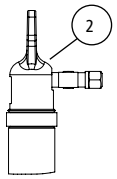

COMPOSITE
Units built in Feb. 2015 and after

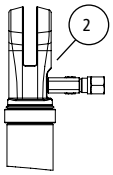

RELEASE MECHANISMS

Manual

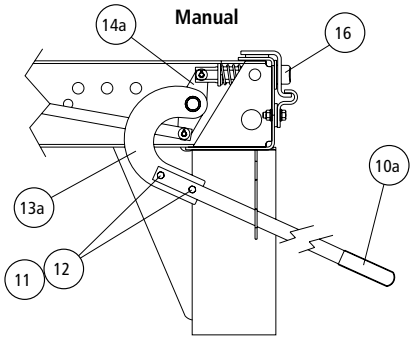

Customer Supplied (Spring)

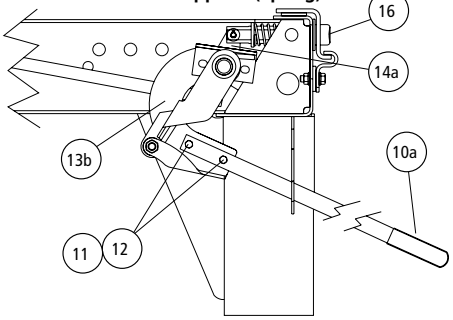

NO LONGER AVAILABLE ON PRODUCTION MODELS OR BOX REPLACEMENTS — PARTS FOR THESE MECHANISMS ARE STILL AVAILABLE

Mechanical Air Assist (with Brake Chamber)

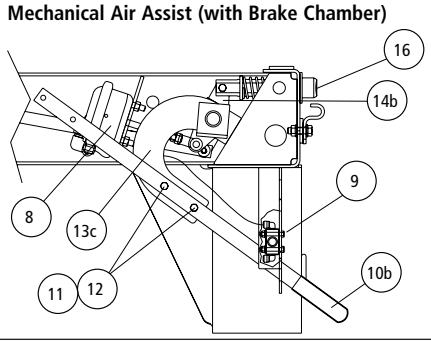

QUIK-DRAW® Fully Pneumatic

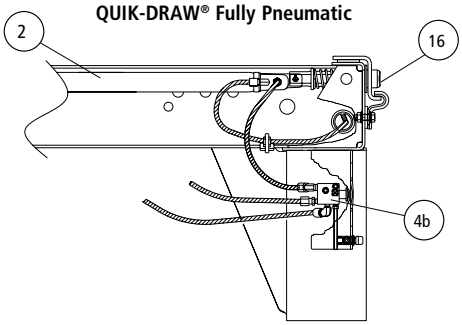

SLIDER BOX ASSEMBLY

ITEM	DESCRIPTION	PART NO.	SYSTEM QTY.	NOTE
1	**AFTERMARKET BOX REPLACEMENT**	AMBOX.###		Contact Hendrickson for assistance
2	**QUIK-DRAW® PNEUMATIC PIN-PULL MECHANISM**			See L751 QUIK-DRAW Parts List
3	**PIN EXTENSION 54" BOX WIDTH** (Not shown)			See L751 QUIK-DRAW Parts List
4	**QUIK-DRAW VALVE**			See L751 QUIK-DRAW Parts List
5	**QUIK-DRAW VALVE KNOB with SET SCREW** (Not shown)			See L751 QUIK-DRAW Parts List
6	**QUIK-DRAW VALVE SPACER** (Not shown)			See L751 QUIK-DRAW Parts List
7	**QUIK-DRAW RETROFIT KIT** (Not shown)			See L751 QUIK-DRAW Parts List
8	**BRAKE CHAMBER MECHANICAL AIR ASSIST**	A-23039	1	Type 12 modified
9	**AIR VALVE MECHANICAL AIR ASSIST**	VS-23224	1	Air valve with fittings
10	**HANDLE ASSEMBLY**			
	10a Manual and customer supplied release mechanisms	S-25592	1	Handle and grip assembly
	10b Mechanical air assist release mechanisms	B-22923	1	Handle only
11	**HANDLE BOLT**	SA-1100-10	2	2-3/8"-16 × 1-1/4" hex head bolt, grade 5
12	**HANDLE NUT**	SA-9000-5	2	2-3/8"-16 lock nut, grade B
13	**HANDLE MOUNT**			
	13a Manual	C-21275	1	
	13b Customer supplied	S-23534	1	Includes crank arm bolt kit
	13c Mechanical air assist	C-23231	1	
14	**CRANK ARM WELDMENT**			
	14a Manual and customer supplied	B-33010	2	For front and rear of slider box
	14b Mechanical air assist	B-33010	1	For rear of slider box
15	**CRANK ARM BOLT KIT** (Not shown)	A-22041	1	Includes bolt, flat washer, lock washer and nut
16	**LOCKING PIN**			See L751 QUIK-DRAW Parts List

Note: Narrow hanger shown. Pin pull mechanisms are identical for both wide and narrow width slider models.

Note: Identification can be found on the roadside slider box rail above the front frame bracket there will also be a blank INTRAAX® tag on the inside of the curbside beam

SLIDER BOX ASSEMBLY

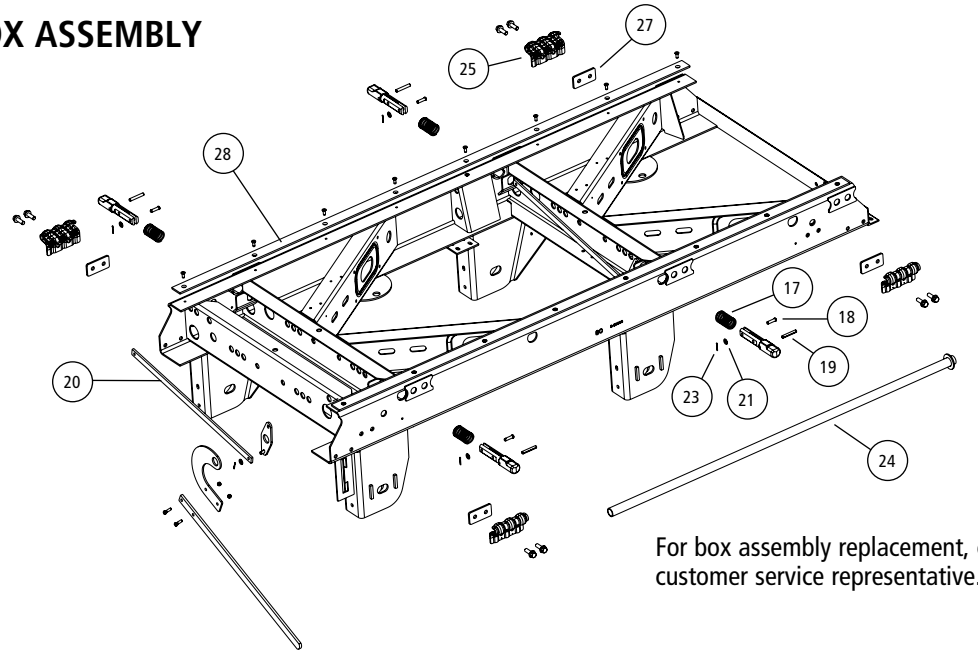

For box assembly replacement, contact a customer service representative.

SLIDER PINS

Units built in Sept. 2012 and after

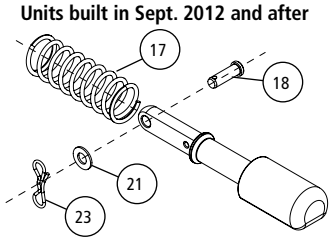

Units built before Sept. 2012

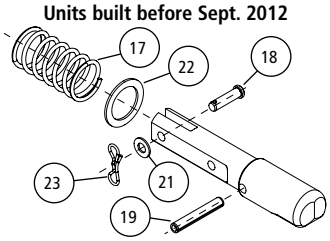

QUIK-DRAW® ACTUATOR ENDS

CAST IRON
Units built before Feb. 2015

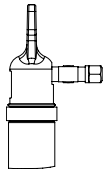

COMPOSITE
Units built in Feb. 2015 and after

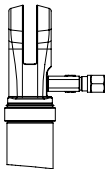

RELEASE MECHANISMS

Manual

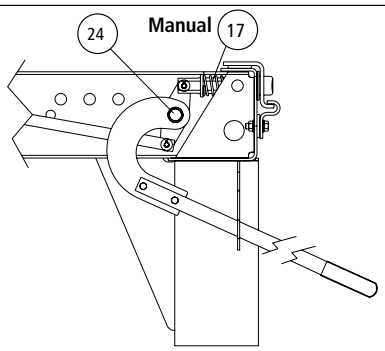

Customer Supplied

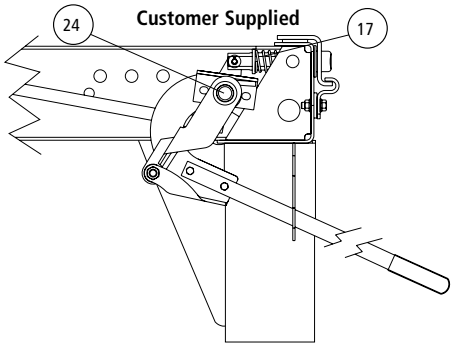

NO LONGER AVAILABLE ON PRODUCTION MODELS OR BOX REPLACEMENTS — PARTS FOR THESE MECHANISMS ARE STILL AVAILABLE

QUIK-DRAW® Mechanical Air Assist

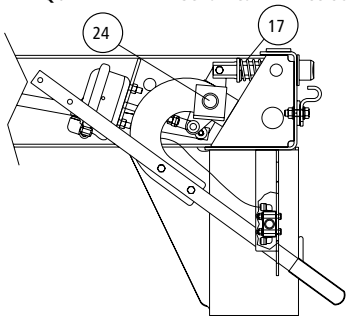

QUIK-DRAW® Pneumatic Pin Release

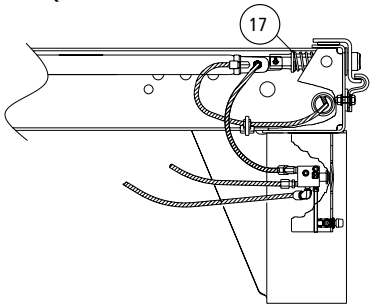

SLIDER BOX ASSEMBLY

ITEM	DESCRIPTION	PART NO.	SYSTEM QTY.	NOTE
17	**LOCKING PIN SPRING**			See L751 QUIK-DRAW® Parts List
18	**CLEVIS PIN**			See L751 QUIK-DRAW Parts List
19	**SPRING PIN (Units built before Sept. 2012)**			See L751 QUIK-DRAW Parts List
20	**LOCKING PIN LINK**			See L751 QUIK-DRAW Parts List
21	**LOCKING PIN WASHER**			See L751 QUIK-DRAW Parts List
22	**PIN WASHER (Units built before Sept. 2012)**			See L751 QUIK-DRAW Parts List
23	**LOCKING PIN LINK COTTER PIN**			See L751 QUIK-DRAW Parts List
24	**PIPE WELDMENT**			
	Manual and mechanical air assist	S-21433	1	
	Customer supplied	S-21433-1	1	
25	**BODY RAIL CLIP**			
	3.4" clip height	S-24459	4	Use with 4" hole centers and 1.625" locking pin
	3.8" clip height	S-24460	4	Use with 6" hole centers and 1.395" locking pin
26	**BODY RAIL CLIP BOLT**	SA-6900-2	8	1/2"-13" × 1-1/2" flanged bolt
27	**BODY RAIL CLIP SPACER**	A-22367	4	2" clip hole centers
28	**SLIDER WEAR PAD KIT**	S-14342-3	2	Includes (1) slider wear pad and (8) screws

SUSPENSION ASSEMBLIES

HKANT 46K - Narrow Bushing / Tapered Beam Model

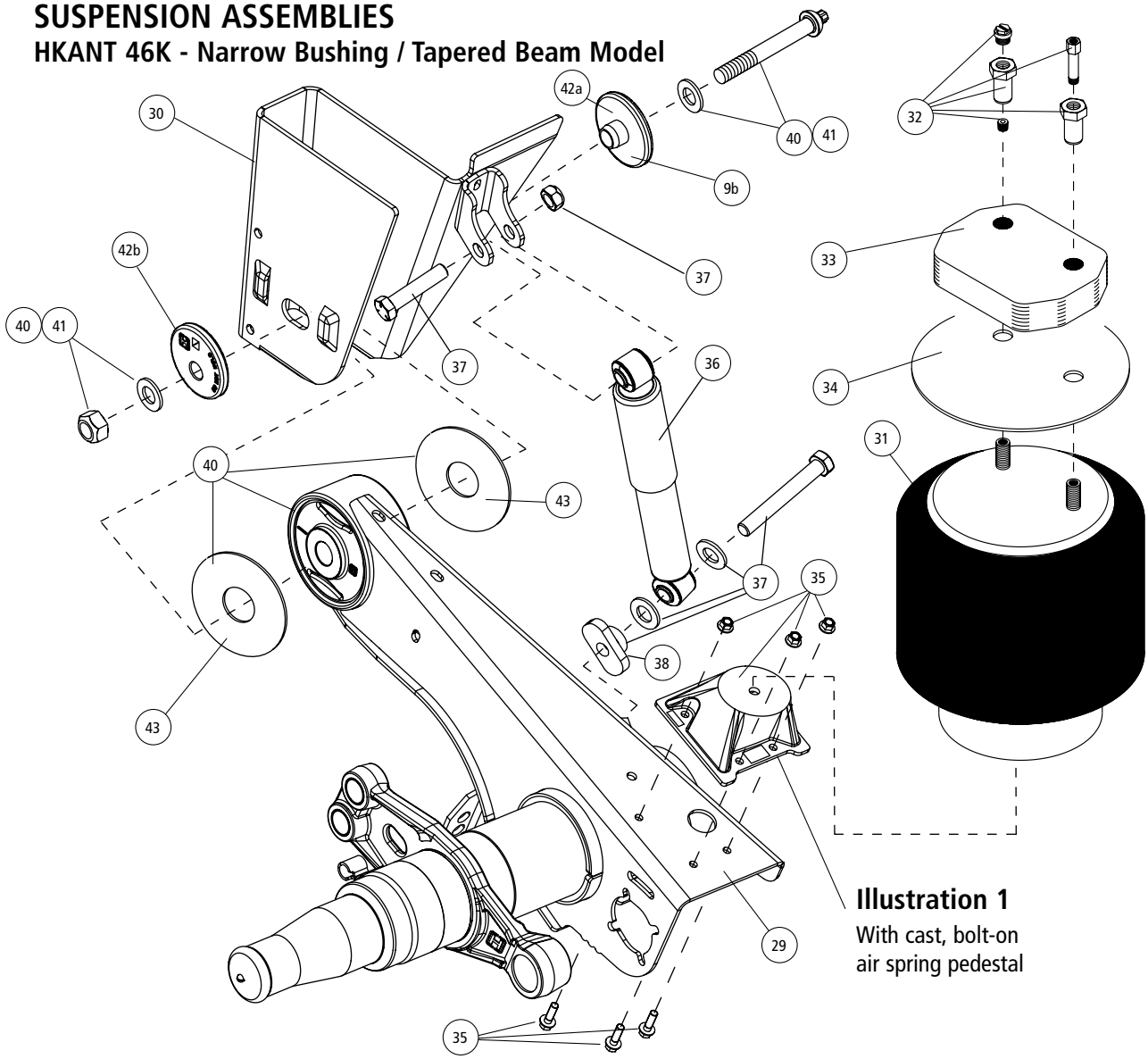

Illustration 1
With cast, bolt-on air spring pedestal

Manufactured Late August 2002 Through 2008

Illustration 2
With cast, bolt-on air spring pedestal

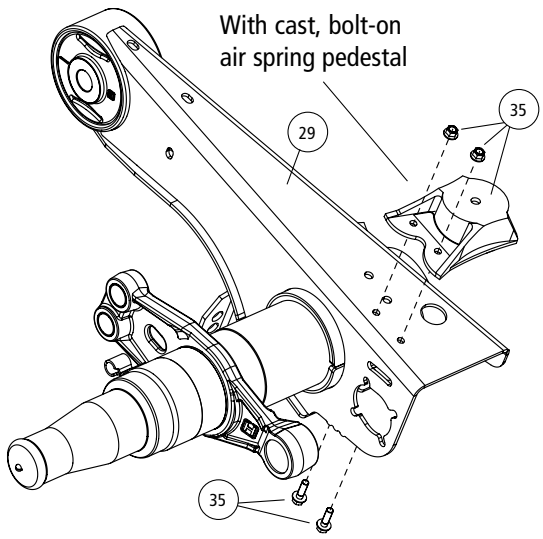

Manufactured 2001 Through 2002

Illustration 3
With 2-inch, weld-on air spring pedestal

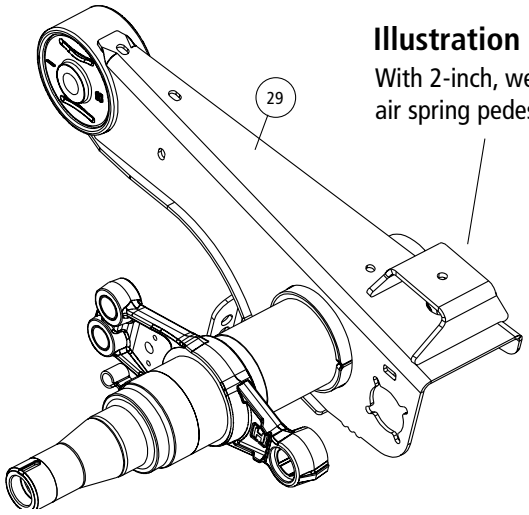

SUSPENSION ASSEMBLIES —

HKANT 46K - Narrow Bushing / Tapered Beam Model

ITEM	DESCRIPTION	PART NO.	SYSTEM QTY.	NOTE
29	**HALFTRAAX™ AXLE/BEAM WELDMENT**	HTRAAX.###	2	Contact Hendrickson for assistance
30	**FRAME BRACKET**			See L1266 Frame Bracket Parts List
31	**AIR SPRING**			
	16" ride height and above	S-22948	4	Replaces C-21966
	Below 16" ride height	S-21800	4	Replaces C-21800
32	**AIR SPRING MOUNTING KIT (per air spring) - When model includes a cast, bolt-on pedestal under the air spring.**			
	14" - 18" ride heights	S-22619/2	4	Includes Spiralock nuts, pipe plug and flange nut
	19" ride height	S-22630/2	4	Includes Spiralock nuts, pipe plug, air fitting and flange nut
33	**AIR SPRING SPACER - When model includes a cast, bolt-on pedestal under the air spring.**			19" ride height
		B-22510-1	4	1-1/8" spacer
34	**AIR SPRING MOUNTING PLATE**	S-27042	4	15.5" ride height
35	**CAST AIR SPRING PEDESTAL KIT - When model includes a cast, bolt-on pedestal under the air spring. (Illustrations 1 and 2)**			
	16" ride height with 2" pedestal	S-27447-1	2	Includes left and right side pedestals and fasteners
	16.5" ride height with 2.57" pedestal	S-27447-2	2	Same as above
	14" and 17" ride heights with 3.17" pedestal	S-27447-3	2	Same as above
	15", 15.5", 18" and 19" ride heights with 3.91" pedestal	S-27447-4	2	Same as above
36	**SHOCK ABSORBER**	S-23566	4	Standard duty
37	**SHOCK BOLT KIT**	S-24049/2	4	Includes shear bolt, spacer, washers, hex bolt and hex nut
38	**SHOCK SPACER**	S-27196	4	
39	**SHOCK STRAP KIT** (Not shown)	C-23086-1	4	Includes (2) straps, (2) clevis and (4) ties
40	**TRI-FUNCTIONAL® PIVOT BUSHING KIT**[1]	S-26321	2	Narrow bushing, includes (2) bushings, (2) pivot bolt kits, (4) bushing tube spacers and lubricant pack
41	**QUIK-ALIGN® PIVOT BOLT KIT**	S-24705	4	Contains 7" bolt, nut and hardened washers
42	**QUIK-ALIGN ALIGNMENT COLLAR**			
	42a Concentric (inner)	S-20924	4	Pivot bolt hole is centered
	42b Eccentric (outer)	S-20925	4	Pivot bolt hole is offset from center
43	**BUSHING TUBE SPACER**	S-26807	8	Outer diameter dimension of TRI-FUNCTIONAL bushing inner metal is 2.6"; inner hole dimension of bushing tube spacer 2.95"

1. Bushing tool S-24736 is required to correctly re-bush the suspension.

Note: Identification can be found on the roadside slider box rail above the front frame bracket there will also be a blank INTRAAX tag on the inside of the curbside beam.

SUSPENSION ASSEMBLIES —
HKAT 46K / HKA200 - Wide Bushing / Straight Beam Model

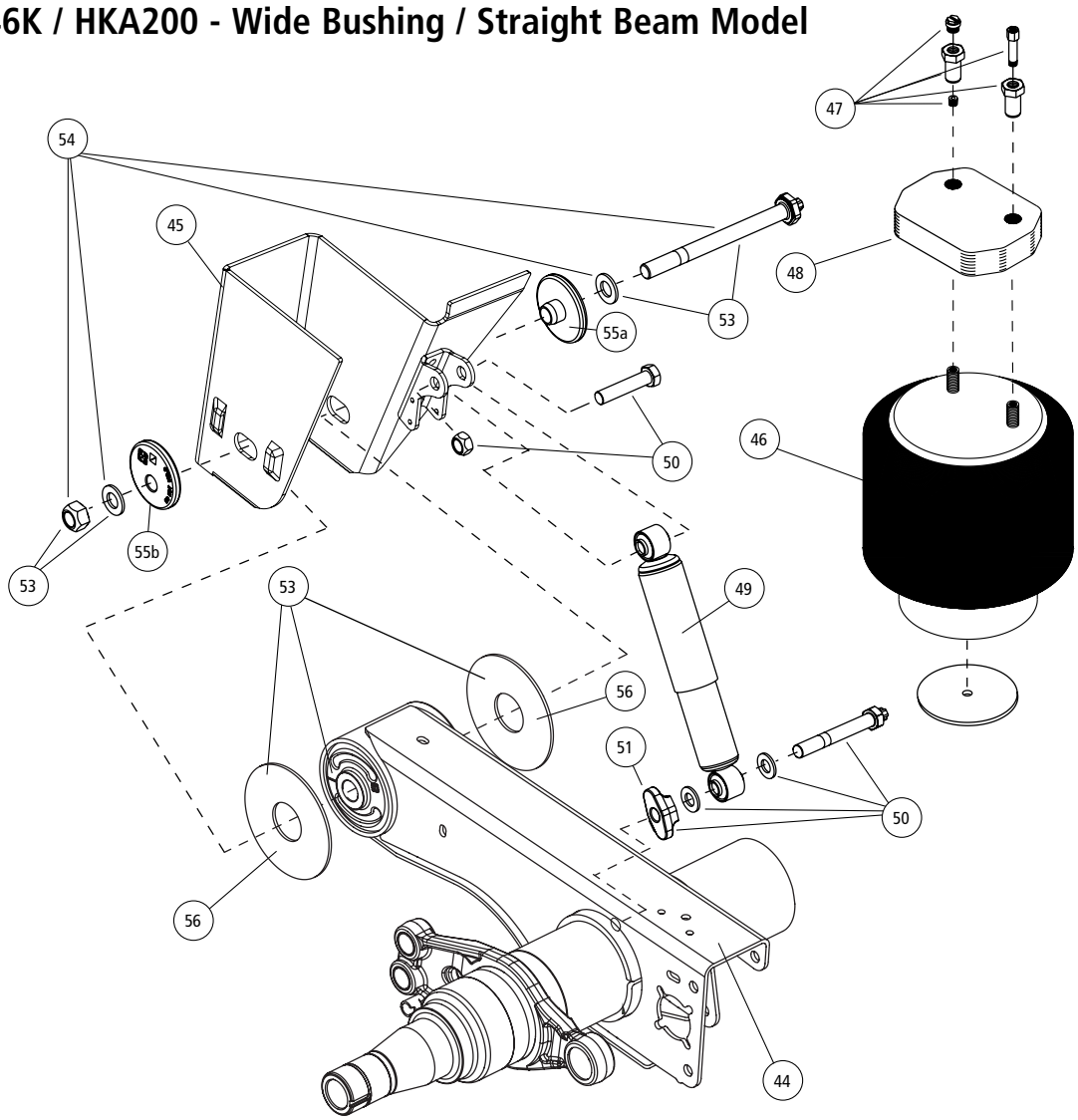

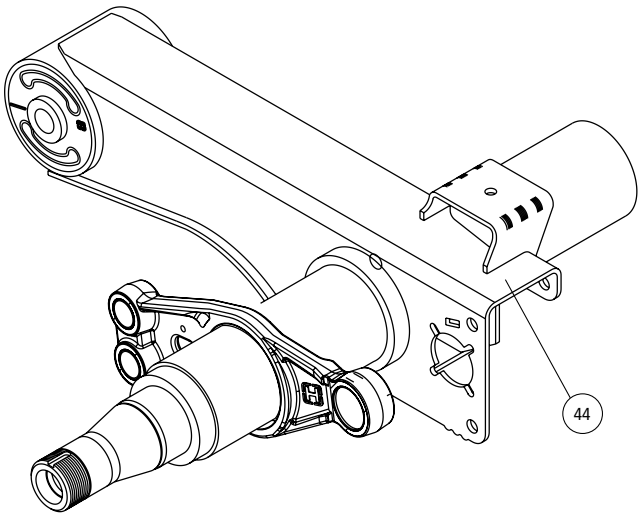

SUSPENSION ASSEMBLIES —
HKAT 46K / HKA200 - Wide Bushing / Straight Beam Model

ITEM	DESCRIPTION	PART NO.	SYSTEM QTY.	NOTE
44	**HALFTRAAX™ AXLE/BEAM WELDMENT**	HTRAAX.###	2	Contact Hendrickson for assistance
45	**FRAME BRACKET ASSEMBLY**			See L1266 Frame Bracket Parts List
46	**AIR SPRING**			
	14" - 15" ride heights	S-21800	4	Replaces C-21800
	16" - 19" ride heights	S-22948	4	Replaces C-21966
47	**AIR SPRING MOUNTING KIT (per air spring) - When model includes a 2", weld-on pedestal under the air spring.**			
	14" and 16.5" ride heights	S-22635/2	4	Includes Spiralock nuts, pipe plug and flange nut
	16" ride height	S-22619/2	4	Same as above
	15" and 18" ride heights	S-22631/2	4	Includes Spiralock nuts, pipe plug, air fitting and flange nut
	17" ride height	S-22630/2	4	Same as above
	19" ride height	S-22632/2	4	Same as above
48	**AIR SPRING SPACER - When model includes a 2", weld-on pedestal under the air spring.**			
	14" and 16.5" ride heights	B-22510-4	4	3/4" spacer
	15" and 18" ride heights	B-22510-2	4	1-7/8" spacer
	17" ride height	B-22510-1	4	1-1/8" spacer
	19" ride height	B-22510-3	4	3-1/8" spacer
49	**SHOCK ABSORBER**	S-23566	4	Standard duty
50	**SHOCK BOLT KIT**	S-24049/2	4	Includes shear bolt, spacer, washers, hex bolt and hex nut
51	**SHOCK SPACER**	S-27196	4	
52	**SHOCK STRAP KIT** (Not shown)	C-23086-1	4 (4) ties	Includes (2) straps, (2) clevis and
53	**TRI-FUNCTIONAL® PIVOT BUSHING KIT**[1]	S-24691	4	Wide bushing, includes (1) bushing, (1) pivot bolt kit, (2) bushing tube spacers and lubricant pack
54	**QUIK-ALIGN® PIVOT BOLT KIT**	S-24679	4	Contains 10" bolt, nut and hardened washers
55	**QUIK-ALIGN ALIGNMENT COLLAR**			
	55a Concentric (inner)	S-20924	4	Pivot bolt hole is centered
	55b Eccentric (outer)	S-20925	4	Pivot bolt hole is offset from center
56	**BUSHING TUBE SPACER**	S-21099	8	Outer diameter dimension of TRI-FUNCTIONAL® Bushing inner-metal is 2.2"; Inner hole dimension of bushing tube spacer 2.38"

1. Bushing tool S-21307 is required to correctly re-bush the suspension

More information can be found in the following documents

Lit. Number	Description
L1055	SURELOK® Parts List
L1102	Slider Accessories and Axle Components Parts List
L949	RTR® READY-TO-ROLL® Parts List
L589	TRI-FUNCTIONAL® Bushing Replacement Tool
L1063	Air Disc Brakes Parts List
L1104	Brake Kits and Components Parts List

Note: Identification can be found on the roadside slider box rail above the front frame bracket there will also be a blank INTRAAX tag on the inside of the curbside beam

NOTES

Slider Suspension System

VANTRAAX® HKANT 50K

L561 - Suspension Components 198

L1102 - Slider Accessories 385

L1266 - Frame Brackets 275

L1287 - Shocks 294

L751 - QUIK-DRAW® 371

L1055 - SURELOK® 375

L1182 - Vehicle Controls 302

L878 - Tire Pressure Control System 319

L1104 - Drum Brake Components 329

L949 - READY-TO-ROLL® Wheel-End Packages
& Air Disc Brake Components 337

SLIDER BOX ASSEMBLY

Wide Frame Bracket
Wide Pivot Connection

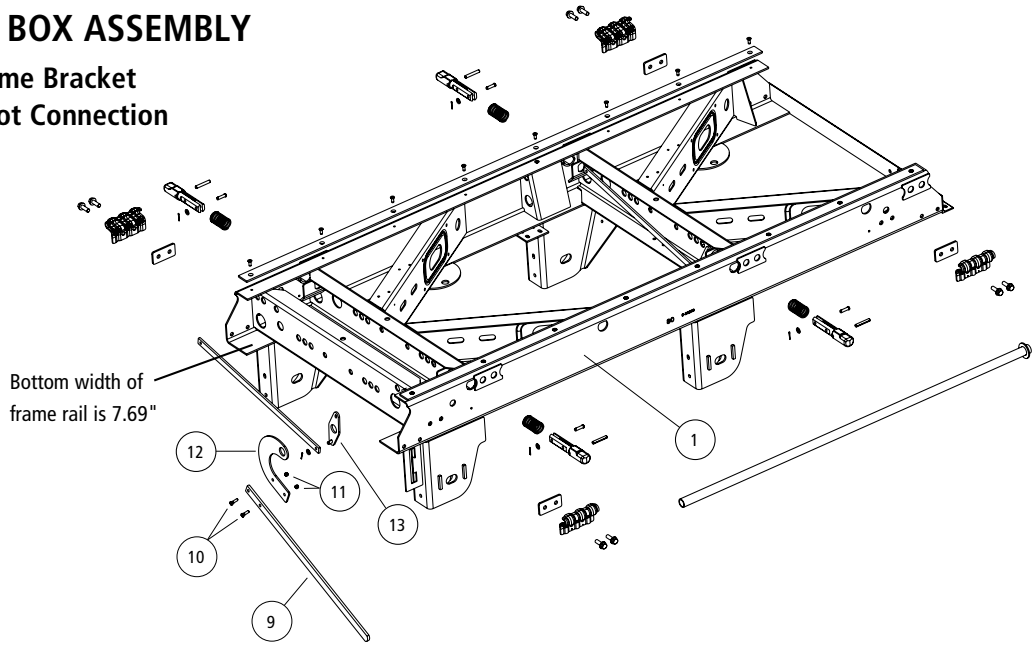

SLIDER PINS

Units built in Sept. 2012 and after

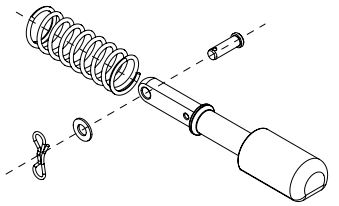

Units built before Sept. 2012

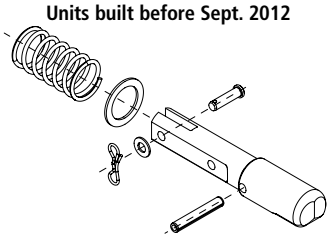

QUIK-DRAW® ACTUATOR ENDS

CAST IRON
Units built before Feb. 2015

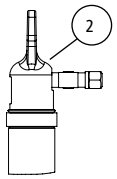

COMPOSITE
Units built in Feb. 2015 and after

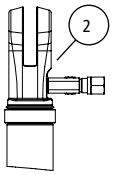

CURRENT PRODUCTION PIN-PULL RELEASE MECHANISMS

Manual

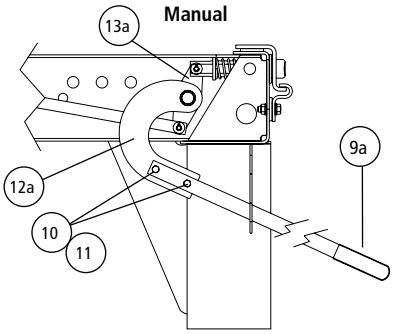

QUIK-DRAW® Fully Pneumatic

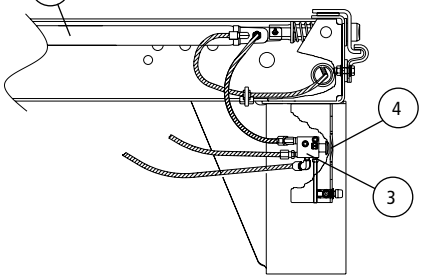

NO LONGER AVAILABLE ON PRODUCTION MODELS OR BOX REPLACEMENTS — PARTS FOR THESE MECHANISMS ARE STILL AVAILABLE

Mechanical Air Assist (with Brake Chamber)
HKA200 Only

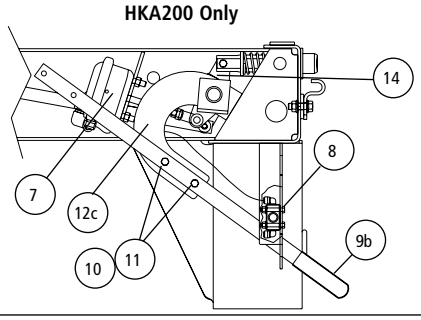

Customer Supplied (Spring)

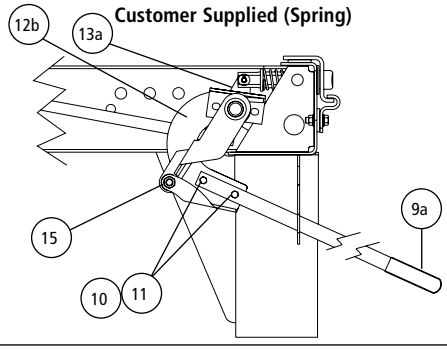

SLIDER BOX ASSEMBLY

ITEM	DESCRIPTION	PART NO.	SYSTEM QTY.	NOTE
1	**AFTERMARKET BOX REPLACEMENT**	AMBOX.###	1	Many options exist. Contact Hendrickson with your model number for assistance. You can upgrade to QUIK-DRAW® pneumatic pin-pull system when you replace your slider box.
2	**QUIK-DRAW® PNEUMATIC PIN-PULL MECHANISM**			See L751 QUIK-DRAW Parts List
3	**QUIK-DRAW VALVE**			See L751 QUIK-DRAW Parts List
4	**QUIK-DRAW VALVE KNOB with SET SCREW**			See L751 QUIK-DRAW Parts List
5	**QUIK-DRAW VALVE SPACER** (Not Shown)			See L751 QUIK-DRAW Parts List
6	**QUIK-DRAW RETROFIT KIT** (Not Shown)			See L751 QUIK-DRAW Parts List
7	**BRAKE CHAMBER MECHANICAL AIR ASSIST**	A-23039	1	Type 12 modified
8	**AIR VALVE MECHANICAL AIR ASSIST**	VS-23224	1	Air valve with fittings
9	**HANDLE ASSEMBLY**			
	9a Manual and customer supplied	S-25592	1	Handle and grip assembly
	9b Mechanical air assist	B-22923	1	Handle only
10	**HANDLE BOLT**	SA-1100-10	2	2-3/8"-16 × 1-1/4" hex head bolt, grade 5
11	**HANDLE NUT**	SA-9000-5	2	2-3/8"-16 lock nut, grade B
12	**HANDLE MOUNT**			
	12a Manual	C-21275	1	
	12b Customer supplied	S-23534	1	Includes crank arm bolt kit
	12c Mechanical air assist	C-23231	1	
13	**CRANK ARM WELDMENT**			
	13a Manual and customer supplied	B-33010	2	For front and rear of slider box
	13b Mechanical air assist - rear (Not Shown)	B-33010	1	For rear of slider box
14	**CRANK ARM PLATE MECHANICAL AIR ASSIST**	B-23025	1	For front of slider box
15	**CRANK ARM BOLT KIT**			
	Customer supplied mechanism	A-22041	1	Includes bolt, flat washer, lock washer and nut

Note: Identification can be found on the roadside slider box rail above the front frame bracket. There is also a blank INTRAAX® tag on the inside of the curbside beam.

SLIDER BOX ASSEMBLY

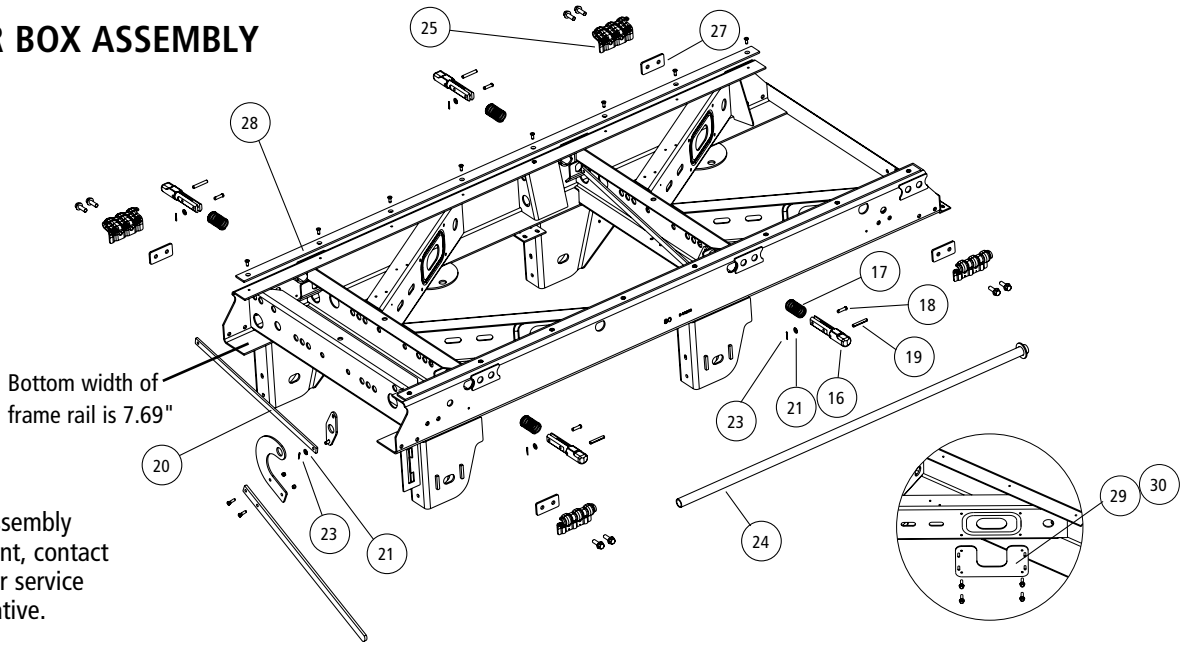

For box assembly replacement, contact a customer service representative.

SLIDER PINS

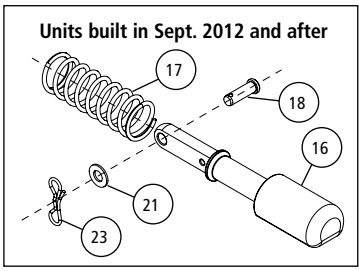

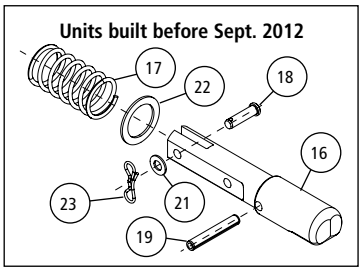

QUIK-DRAW® ACTUATOR ENDS

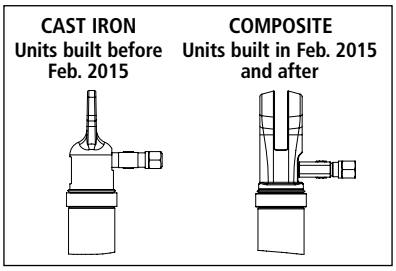

CURRENT PRODUCTION PIN-PULL RELEASE MECHANISMS

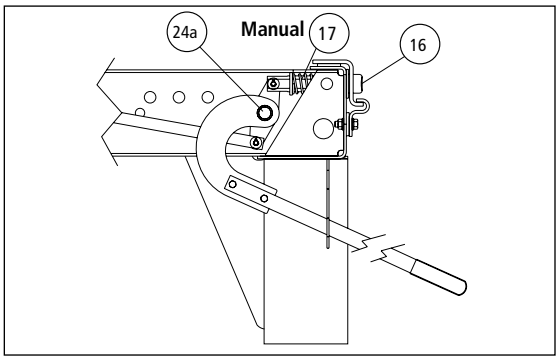

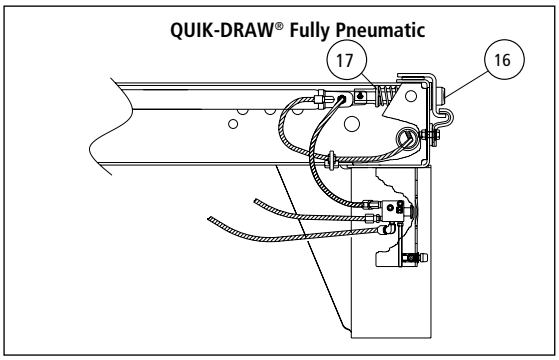

NO LONGER AVAILABLE ON PRODUCTION MODELS OR BOX REPLACEMENTS — PARTS FOR THESE MECHANISMS ARE STILL AVAILABLE

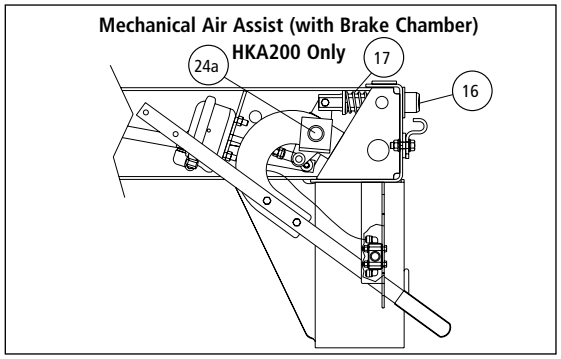

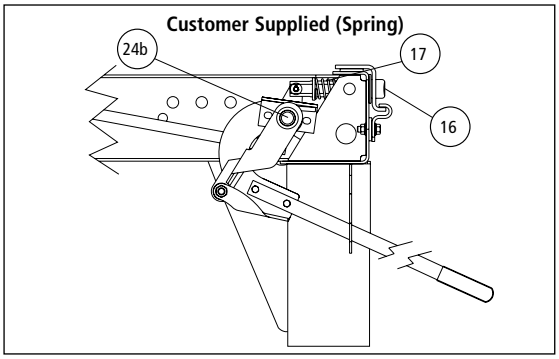

SLIDER BOX ASSEMBLY

ITEM	DESCRIPTION	PART NO.	SYSTEM QTY.	NOTE
16	**LOCKING PIN**			See L751 QUIK-DRAW® Parts List
17	**LOCKING PIN SPRING**			See L751 QUIK-DRAW Parts List
18	**CLEVIS PIN**			See L751 QUIK-DRAW Parts List
19	**SPRING PIN (Units built before Sept. 2012)**			See L751 QUIK-DRAW Parts List
20	**LOCKING PIN LINK**			See L751 QUIK-DRAW Parts List
21	**LOCKING PIN WASHER**			See L751 QUIK-DRAW Parts List
22	**PIN WASHER (Units built before Sept. 2012)**			See L751 QUIK-DRAW Parts List
23	**LOCKING PIN LINK COTTER PIN**			See L751 QUIK-DRAW Parts List
24	**PIPE WELDMENT**			
	24a Manual and mechanical air assist	S-21433	1	
	24b Customer supplied machanism	S-21433-1	1	
25	**BODY RAIL CLIP**			
	25a 3.4" clip height	S-24459	4	Use with 4" hole centers
	25b 3.8" clip height	S-24460	4	Use with 6" hole centers
26	**BODY RAIL CLIP BOLT**	SA-6900-2	8	1/2"-13" × 1-1/2" flanged bolt
27	**BODY RAIL CLIP SPACER**			
	2" clip hole centers	A-22367	4	
28	**SLIDER WEAR PAD KIT**	S-14342-3	2	Pad with screws
29	**K-BRACE REINFORCEMENT KIT (16" Ride Height)**	S-27316-1	1	Includes (4) reinforcement plates, (4) air spring plates, screws and nuts
30	**K-BRACE REINFORCEMENT KIT (All Other Ride Heights)**	S-27316-2	1	Includes (4) reinforcement plates, screws and nuts

Note: Identification can be found on the roadside slider box rail above the front frame bracket. There is also a blank INTRAAX® tag on the inside of the curbside beam.

SUSPENSION ASSEMBLIES

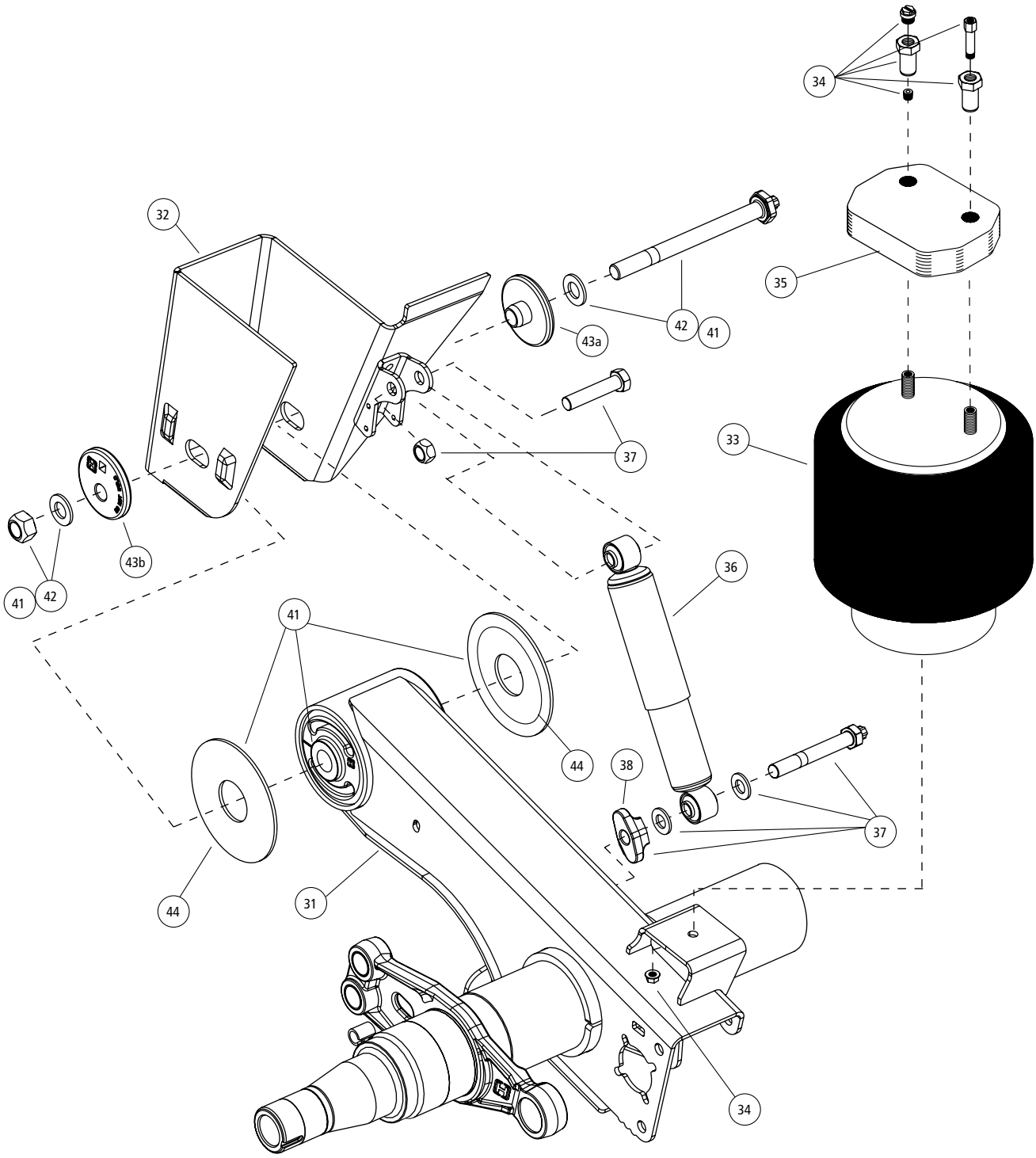

SUSPENSION ASSEMBLIES

ITEM	DESCRIPTION	PART NO.	SYSTEM QTY.	NOTE
31	**HALF-TRAAX AXLE / BEAM WELDMENT**	HTRAAX.###	2	Contact Hendrickson for assistance Many options exist. Contact Hendrickson with your model number for assistance. You can spec your replacement axles fully dressed.
32	**FRAME BRACKET**			See L1266 Frame Bracket Parts List
33	**AIR SPRING**			
	14"-15" ride height	S-20901	4	Includes air spring bottom disk
	16"-19" ride height	S-23748	4	Same as above
34	**AIR SPRING MOUNTING KIT (per air spring)** **When model includes a 2", weld-on pedestal under the air spring.**			
	14" and 16.5" ride height	S-22635/2	4	Includes Spiralock nuts, pipe plug and flange nut
	16" ride height	S-22619/2	4	Same as above
	15" and 18" ride height	S-22631/2	4	Includes Spiralock nuts, pipe plug, air fitting and flange nut
	17" ride height	S-22630/2	4	Same as above
	19" ride height	S-22632/2	4	Same as above
35	**AIR SPRING SPACER** - **When model includes a 2", weld-on pedestal under the air spring.**			
	14" and 16.5" ride height	B-22510-4	4	3/4" spacer
	15" and 18" ride height	B-22510-2	4	1-7/8" spacer
	17" ride height	B-22510-1	4	1-1/8" spacer
	19" ride height	B-22510-3	4	3-1/8" spacer
36	**SHOCK ABSORBER**			
	Standard duty	S-24023	4	
37	**SHOCK BOLT KIT**	S-24049/2	4	Includes shear bolt, spacer, washers, hex bolt and hex nut
38	**SHOCK SPACER**	B-27196	4	
39	**SHOCK STRAP** (Not Shown)	C-24041-1	4	
40	**SHOCK STRAP KIT** (Not Shown)	C-23086-1	4	Includes strap, clevis and ties
41	**TRI-FUNCTIONAL® PIVOT BUSHING KIT**			
	Wide bushing	S-24691	4	Includes (1) bushing, (1) pivot bolt kit, (2) bushing tube spacers and lubricant pack
42	**QUIK-ALIGN® PIVOT BOLT KIT** **(alignment collars not included)**	S-24679	4	Contains 10" bolt, nut and hardened washers
43	**QUIK-ALIGN ALIGNMENT COLLAR**			
	43a Concentric (inner)	S-20924	4	Pivot bolt hole is centered
	43b Eccentric (outer)	S-20925	4	Pivot bolt hole is offset from center
44	**BUSHING TUBE SPACER**	S-21099	8	Outer diameter dimension of TRI-FUNCTIONAL® Bushing inner-metal is 2.2"; Inner hole dimension of bushing tube spacer 2.38"

Note: Identification can be found on the roadside slider box rail above the front frame bracket. There is also a blank INTRAAX® tag on the inside of the curbside beam.

Slider Suspension System

VANTRAAX® HKANT 23K

L1102 - Slider Accessories 385

L1266 - Frame Brackets 275

L1287 - Shocks 294

L751 - QUIK-DRAW® 371

L1055 - SURELOK® 375

L1182 - Vehicle Controls 302

L878 - Tire Pressure Control System 319

L1104 - Drum Brake Components 329

L949 - READY-TO-ROLL® Wheel-End Packages
& Air Disc Brake Components 337

Slider Suspension System

VANTRAAX® HKANT / HKAT Tridem Slider

L1221 - Suspension Components 206

L1079 - Suspension Components 212

L1102 - Slider Accessories 385

L1266 - Frame Brackets 275

L1287 - Shocks 294

L751 - QUIK-DRAW® 371

L1055 - SURELOK® 375

L1182 - Vehicle Controls 302

L878 - Tire Pressure Control System 319

L1104 - Drum Brake Components 329

L949 - READY-TO-ROLL® Wheel-End Packages
& Air Disc Brake Components 337

SLIDER BOX ASSEMBLY

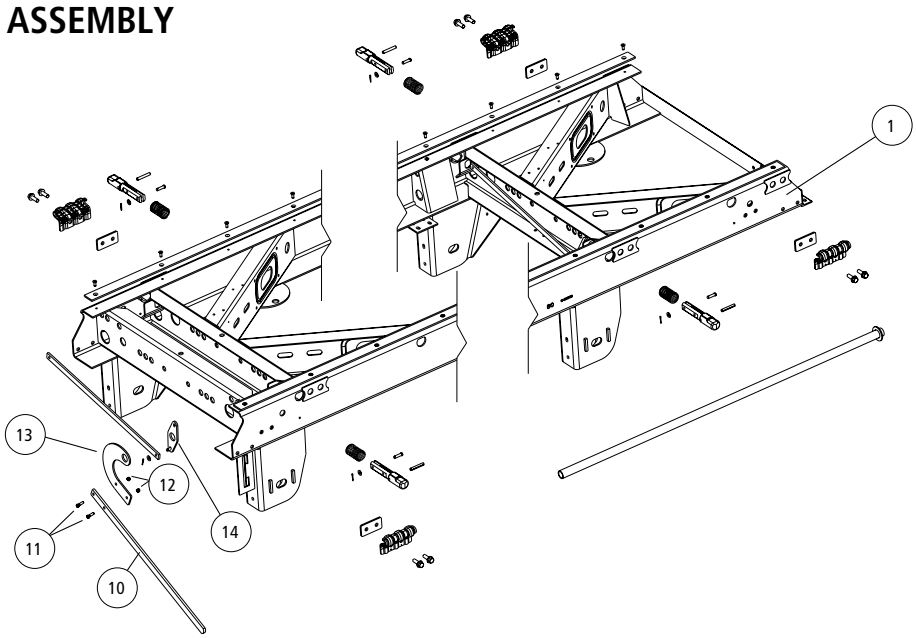

SLIDER PINS

Units built in Sept. 2012 and after

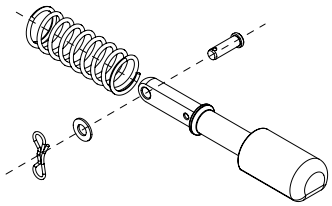

Units built before Sept. 2012

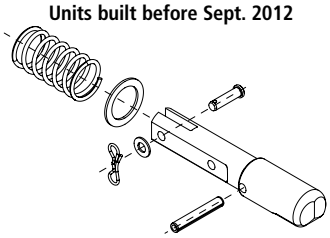

QUIK-DRAW® ACTUATOR ENDS

CAST IRON
Units built before Feb. 2015

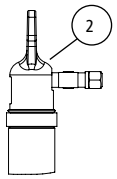

COMPOSITE
Units built in Feb. 2015 and after

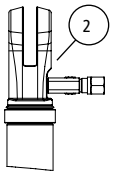

CURRENT PRODUCTION PIN-PULL RELEASE MECHANISMS

Manual

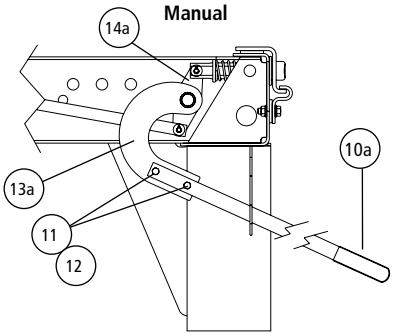

QUIK-DRAW® Fully Pneumatic

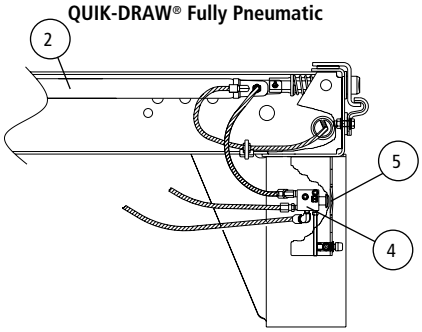

NO LONGER AVAILABLE ON PRODUCTION MODELS OR BOX REPLACEMENTS — PARTS FOR THESE MECHANISMS ARE STILL AVAILABLE

Mechanical Air Assist (with Brake Chamber)

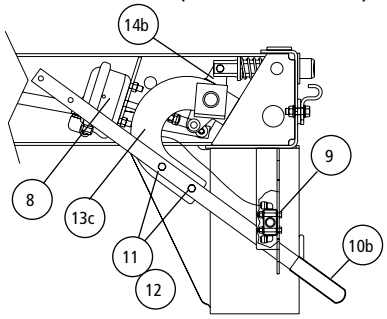

Customer Supplied (Spring)

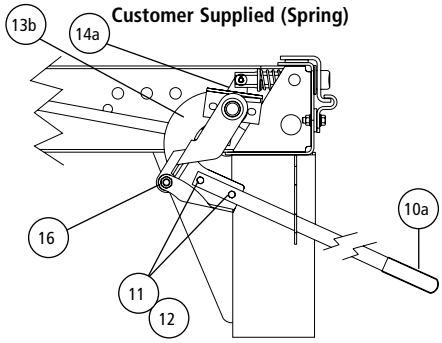

SLIDER BOX ASSEMBLY

ITEM	DESCRIPTION	PART NO.	SYSTEM QTY.	NOTE
1	**AFTERMARKET BOX REPLACEMENT**	AMBOX.###	1	Contact Hendrickson for assistance
2	**QUIK-DRAW® PNEUMATIC PIN-PULL MECHANISM**			See L751 QUIK-DRAW Parts List
3	**PIN EXTENSION 54" BOX WIDTH** (Not shown)			See L751 QUIK-DRAW Parts List
4	**QUIK-DRAW VALVE**			See L751 QUIK-DRAW Parts List
5	**QUIK-DRAW VALVE KNOB with SCREW SET**			See L751 QUIK-DRAW Parts List
6	**QUIK-DRAW VALVE SPACER** (Not shown)			See L751 QUIK-DRAW Parts List
7	**QUIK-DRAW RETROFIT KIT** (Not shown)			See L751 QUIK-DRAW Parts List
8	**BRAKE CHAMBER MECHANICAL AIR ASSIST**	A-23039	1	Type 12 modified
9	**AIR VALVE MECHANICAL AIR ASSIST**	VS-23224	1	Includes air valve with fittings
10	**HANDLE ASSEMBLY**			
	10a Manual / customer supplied	S-25592	1	Handle and grip assembly
	10b Mechanical air assist	B-22923	1	Handle only
11	**HANDLE BOLT**	SA-1100-10	2	2-3/8"-16 × 1-1/4" hex head bolt, grade 5
12	**HANDLE NUT**	SA-9000-5	2	2-3/8"-16 lock nut, grade B
13	**HANDLE MOUNT**			
	13a Manual	C-21275	1	
	13b Customer supplied	S-23534	1	
	13c Mechanical air assist	C-23231	1	Includes crank arm bolt kit
14	**CRANK WELDMENT**			
	14a Manual and customer supplied	B-33010	2	For front and rear of slider box
	14b Mechanical air assist - rear (Not shown)	B-33010	1	For rear of slider box
15	**CRANK PLATE** (Not shown)	OBS-23025	1	Mechanical air assist
16	**CRANK ARM BOLT KIT**	OBS-14233	1	Includes bolt, flat washer, lock washer & nut

Note: Narrow hanger shown. Pin pull mechanisms are identical for both wide and narrow width slider models.
Note: Identification can be found on the roadside slider box rail above the front frame bracket. There is also a blank INTRAAX tag on the inside of the curbside beam.

SLIDER BOX ASSEMBLY

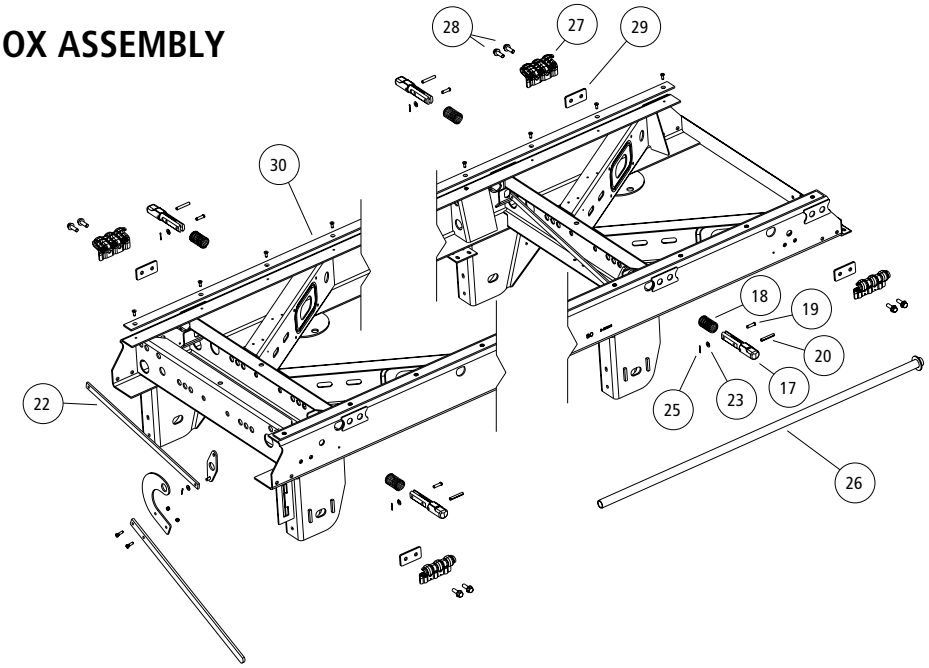

SLIDER PINS

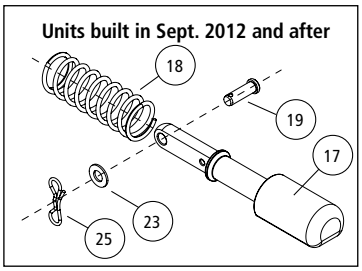

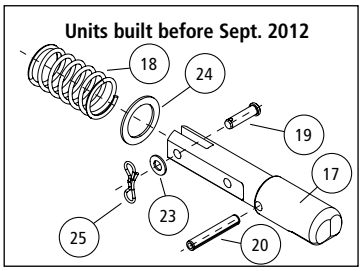

QUIK-DRAW® ACTUATOR ENDS

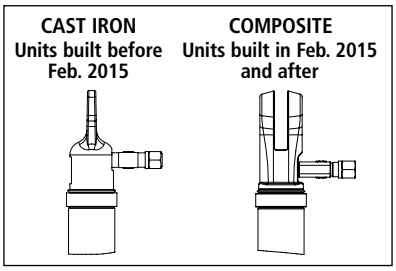

CURRENT PRODUCTION PIN-PULL RELEASE MECHANISMS

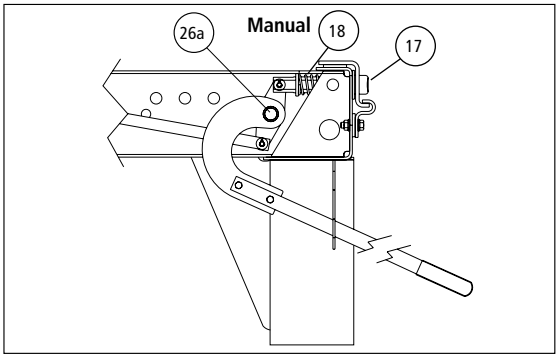

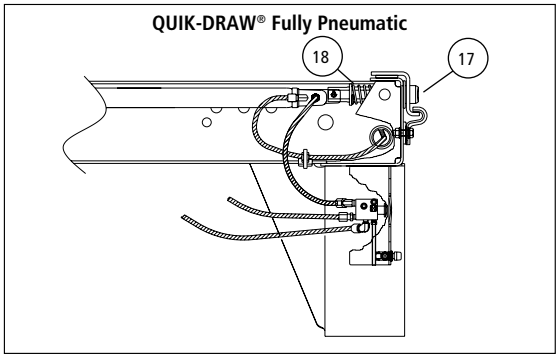

NO LONGER AVAILABLE ON PRODUCTION MODELS OR BOX REPLACEMENTS — PARTS FOR THESE MECHANISMS ARE STILL AVAILABLE

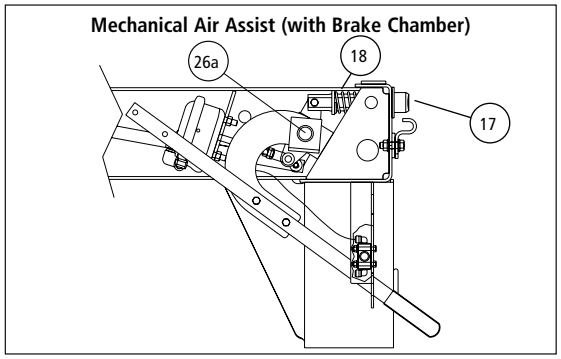

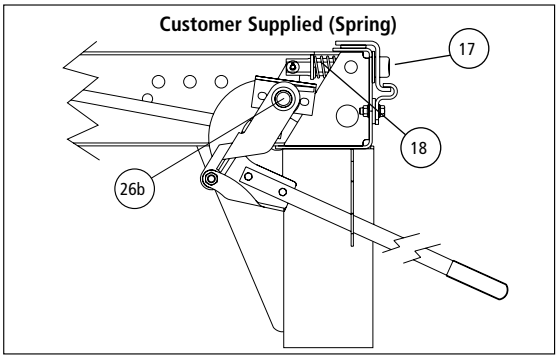

SLIDER BOX ASSEMBLY

ITEM	DESCRIPTION	PART NO.	SYSTEM QTY.	NOTE
17	**LOCKING PIN**			See L751 QUIK-DRAW® Parts List
18	**LOCKING PIN SPRING**			See L751 QUIK-DRAW Parts List
19	**CLEVIS PIN**			See L751 QUIK-DRAW Parts List
20	**SPRING PIN (Units built before Sept. 2012)**			See L751 QUIK-DRAW Parts List
21	**PIN GUIDE** (Not shown)			
	Roadside	S-29646-1	2	
	Curbside	S-29646-2	2	
22	**LOCKING PIN LINK**			See L751 QUIK-DRAW Parts List
23	**LOCKING PIN WASHER**			See L751 QUIK-DRAW Parts List
24	**PIN WASHER**			See L751 QUIK-DRAW Parts List
25	**LOCKING COTTER PIN**			See L751 QUIK-DRAW Parts List
26	**PIPE WELDMENT**			
	26a Manual and mechanical air assist	S-21433	1	
	26b Customer supplied	S-21433-1	1	
27	**BODY RAIL CLIP**			
	3.4" clip height	S-24459	4	Use with 4" hole centers and 1.625" locking pin
	3.8" clip height	S-24460	4	Use with 6" hole centers and 1.375" locking pin
28	**BODY RAIL BOLT**	SA-6900-2	8	1/2"-13" × 1-1/2" flanged bolt
29	**BODY RAIL CLIP SPACER**	A-22367	6	2" clip hole centers
30	**SLIDER WEAR PAD KIT**	S-14342-3	2	Includes (1) slider wear pad and (8) screws

Note: Identification can be found on the roadside slider box rail above the front frame bracket. There is also a blank INTRAAX tag on the inside of the curbside beam.

SUSPENSION ASSEMBLIES

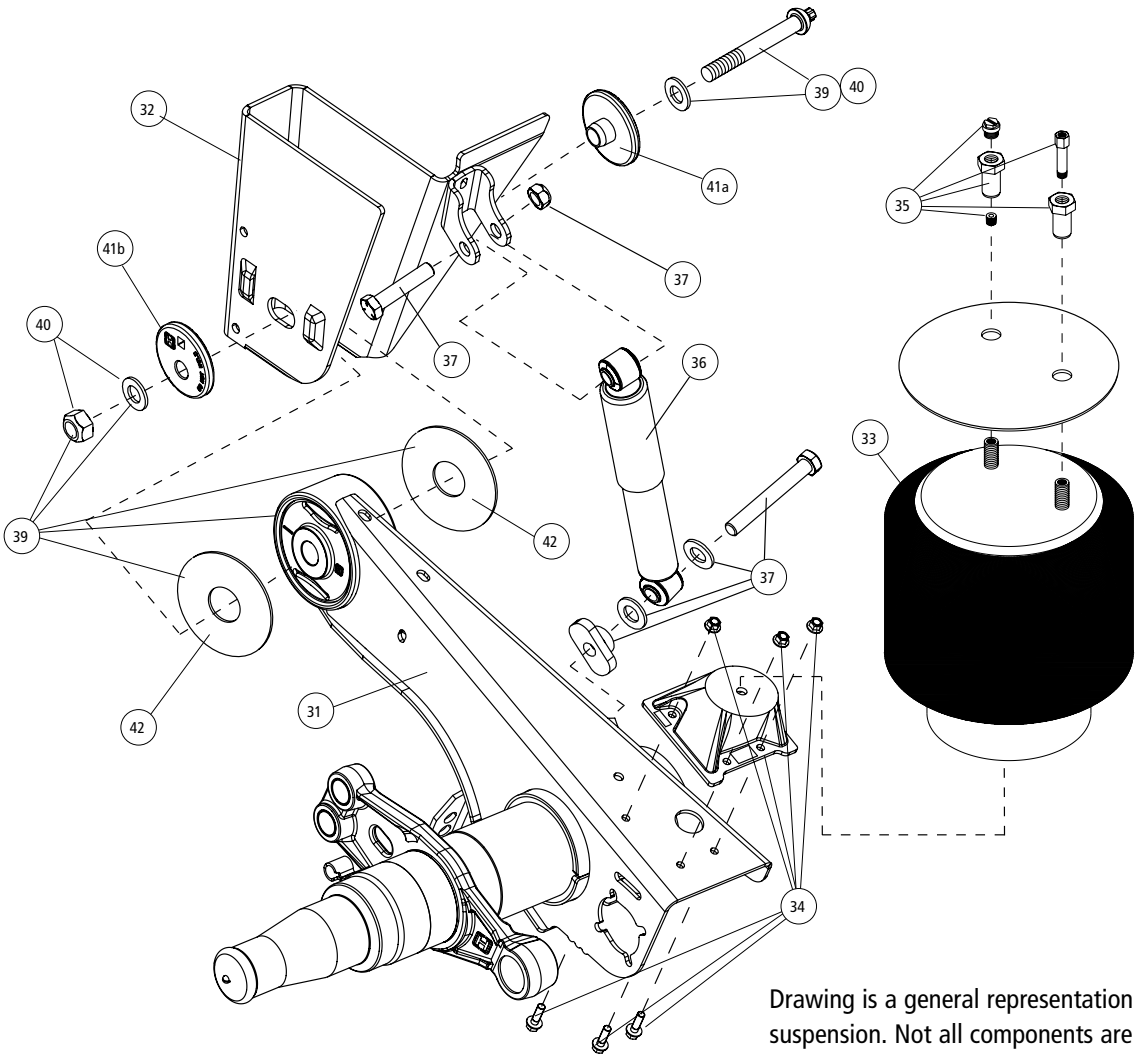

Drawing is a general representation of the actual suspension. Not all components are shown.

SUSPENSION ASSEMBLIES

ITEM	DESCRIPTION	PART NO.	SYSTEM QTY.	NOTE
31	**HALF-TRAAX™ AXLE/BEAM WELDMENT**	HTRAAX.###	3	Contact Hendrickson for assistance
32	**FRAME BRACKET**[1]			See L1266 Frame Bracket Parts List
33	**AIR SPRING**			
	15" ride height	C-21800	6	
	16" – 18" ride heights	C-21966	6	
34	**CAST AIR SPRING PEDESTAL KIT**			Includes left and right side pedestals and fasteners
		S-27447-1	2	16" ride height with 2" pedestal
		S-27447-2	2	16.5" ride height with 2.57" pedestal
		S-27447-3	2	14" and 17" ride heights with 3.17" pedestal
		S-27447-4	2	15", 15.5", 18" and 19" ride heights with 3.91" pedestal
35	**AIR SPRING MOUNTING KIT**			
	16" and 17" ride heights	S-22619/2	6	
	16.5" and 18" ride heights	S-22630/2	6	
36	**SHOCK ABSORBER**	S-23566	6	
37	**SHOCK BOLT KIT** (Per shock)	S-24021	6	Includes shear bolt, spacer, washers, hex bolt and hex nut
38	**SHOCK STRAPS** (Not shown)	C-23086-1	6	Includes straps, clevis and nylon ties
39	**TRI-FUNCTIONAL® PIVOT BUSHING KIT**[2]	S-26321	6	Includes (1) bushing, (1) pivot bolt kit, (2) bushing tube spacers and lubricant pack
40	**QUIK-ALIGN® PIVOT BOLT KIT**	S-24705	6	Contains 10" bolt, nut and hardened washers
41	**QUIK-ALIGN ALIGNMENT COLLARS**			
	41a Concentric (Inner)	S-20924	6	Pivot hole is in center of collar
	41b Eccentric (Outer)	S-20925	6	Pivot hole is offset from the center of collar
42	**BUSHING TUBE SPACER**	S-21099	12	

1. Other options may exist. Contact Hendrickson for assistance.
2. Bushing tool S-21307 is required to properly re-bush the suspension.

Note: Identification can be found on the roadside slider box rail above the front frame bracket. There is also a blank INTRAAX tag on the inside of the curbside beam.

OTHER PARTS LISTS

More information can be found in the following documents

Lit. Number	Description
L1055	SURELOK® Parts List
L1102	Slider Accessories and Axle Components Parts List
L949	RTR® READY-TO-ROLL® Parts List
L589	TRI-FUNCTIONAL® Bushing Replacement Tool
L1063	Air Disc Brakes Parts List
L1104	Brake Kits and Components Parts List

SLIDER BOX ASSEMBLY

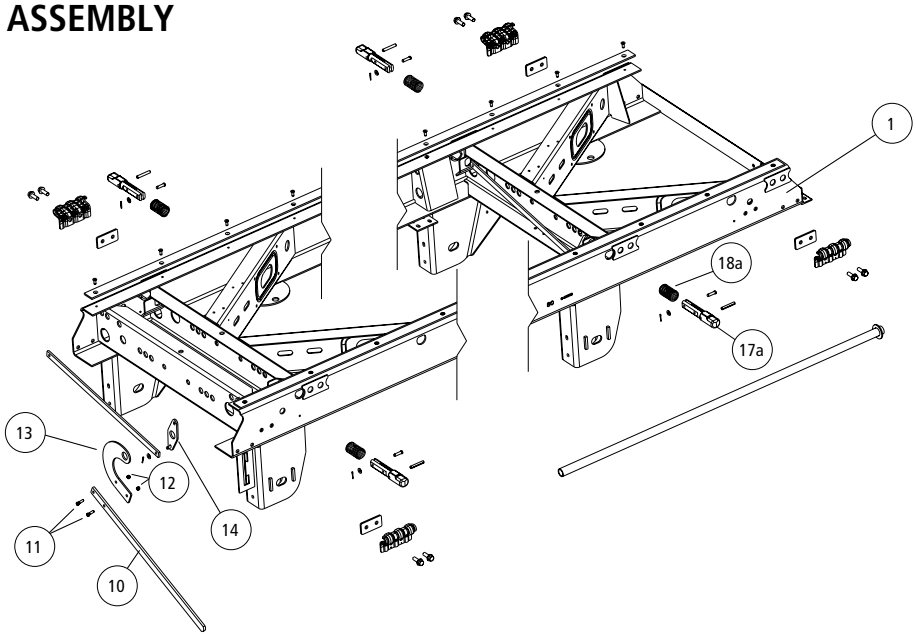

SLIDER PINS

Units built in Sept. 2012 and after

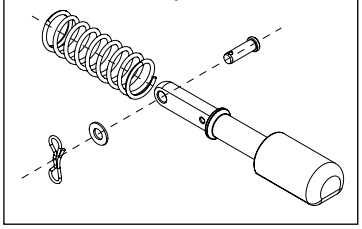

Units built before Sept. 2012

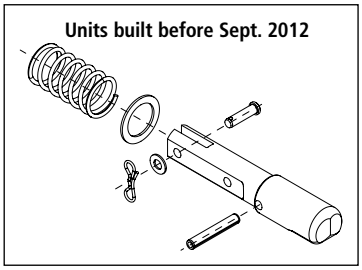

QUIK-DRAW® ACTUATOR ENDS

CAST IRON
Units built before Feb. 2015

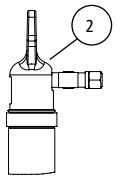

COMPOSITE
Units built in Feb. 2015 and after

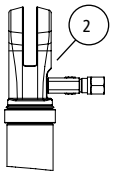

CURRENT PRODUCTION PIN-PULL RELEASE MECHANISMS

Manual

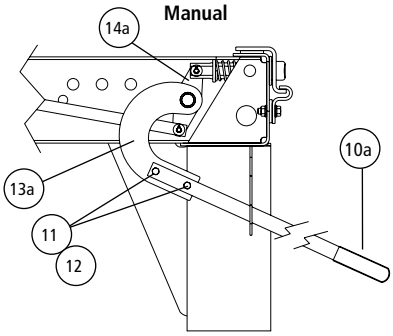

QUIK-DRAW® Fully Pneumatic

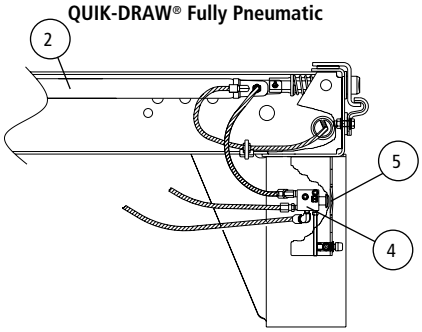

NO LONGER AVAILABLE ON PRODUCTION MODELS OR BOX REPLACEMENTS — PARTS FOR THESE MECHANISMS ARE STILL AVAILABLE

Mechanical Air Assist (with Brake Chamber)

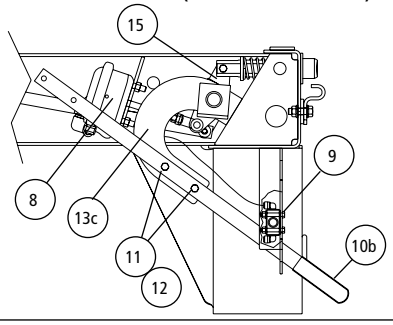

Customer Supplied (Spring)

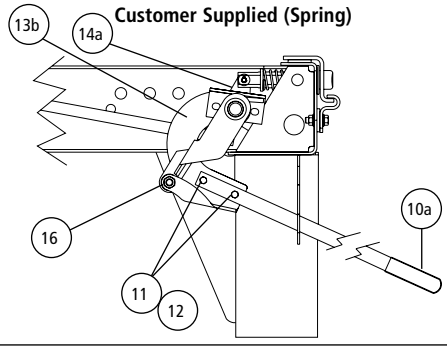

SLIDER BOX ASSEMBLY

ITEM	DESCRIPTION	PART NO.	SYSTEM QTY.	NOTE
1	**AFTERMARKET BOX REPLACEMENT**	AMBOX.###	1	Contact Hendrickson for assistance
2	**QUIK-DRAW® PNEUMATIC PIN-PULL MECHANISM**			See L751 QUIK-DRAW Parts List
3	**PIN EXTENSION 54" BOX WIDTH**			See L751 QUIK-DRAW Parts List
4	**QUIK-DRAW VALVE**			See L751 QUIK-DRAW Parts List
5	**QUIK-DRAW VALVE KNOB with SCREW SET**			See L751 QUIK-DRAW Parts List
6	**QUIK-DRAW VALVE SPACER** (not shown)			See L751 QUIK-DRAW Parts List
7	**QUIK-DRAW RETROFIT KIT** (not shown)			See L751 QUIK-DRAW Parts List
8	**BRAKE CHAMBER MECHANICAL AIR ASSIST**	A-23039	1	Type 12 modified
9	**AIR VALVE MECHANICAL AIR ASSIST**	VS-23224	1	Includes air valve with fittings
10	**HANDLE ASSEMBLY**			
	10a Manual / Customer supplied	S-25592	1	Handle and grip assembly
	10b Mechanical air assist	B-22923	1	Handle only
11	**HANDLE BOLT**	SA-1100-10	2	2-3/8"-16 × 1-1/4" hex head bolt, grade 5
12	**HANDLE NUT**	SA-9000-5	2	2-3/8"-16 lock nut, grade B
13	**HANDLE MOUNT**			
	13a Manual	C-21275	1	
	13b Customer supplied	S-23534	1	
	13c Mechanical air assist	C-23231	1	Includes crank arm bolt kit
14	**CRANK WELDMENT**			
	14a Manual and customer supplied	B-33010	2	For front and rear of slider box
	14b Mechanical air assist - rear (not shown)	B-33010	1	For rear of slider box
15	**CRANK PLATE**	B-23025	1	Mechanical Air Assist
16	**CRANK ARM BOLT KIT**	A-22041	1	Includes bolt, flat washer, lock washer & nut

Note: Narrow hanger shown. Pin pull mechanisms are identical for both wide and narrow width slider models.
Note: Identification can be found on the roadside slider box rail above the front frame bracket. There is also a blank INTRAAX tag on the inside of the curbside beam.

SLIDER BOX ASSEMBLY

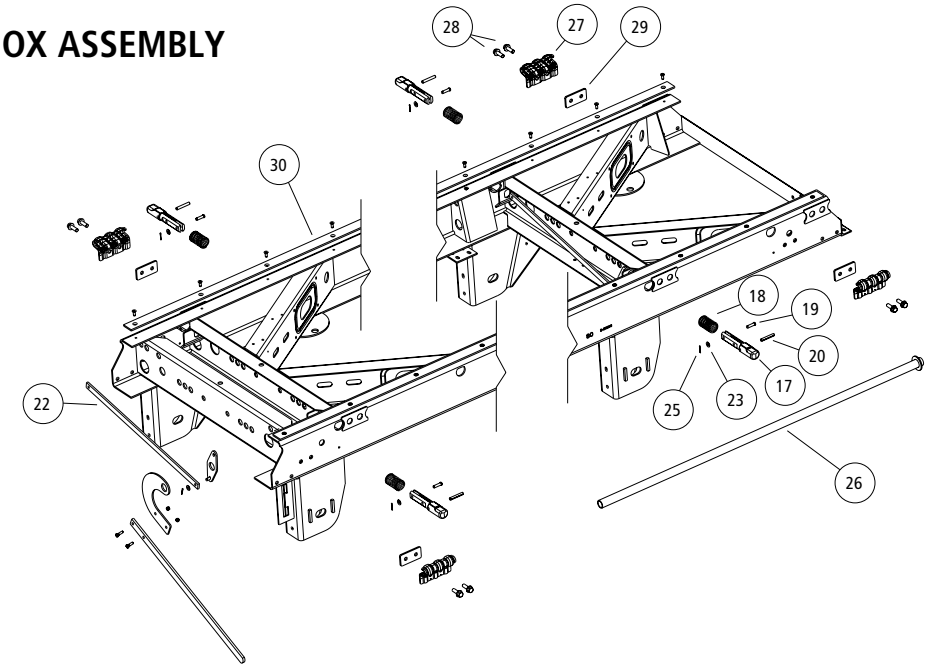

SLIDER PINS

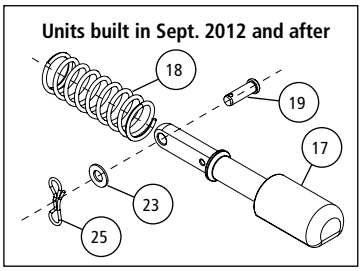

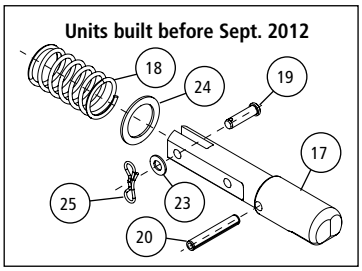

QUIK-DRAW® ACTUATOR ENDS

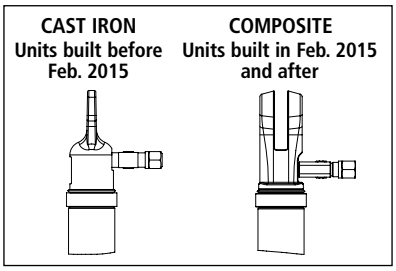

CURRENT PRODUCTION PIN-PULL RELEASE MECHANISMS

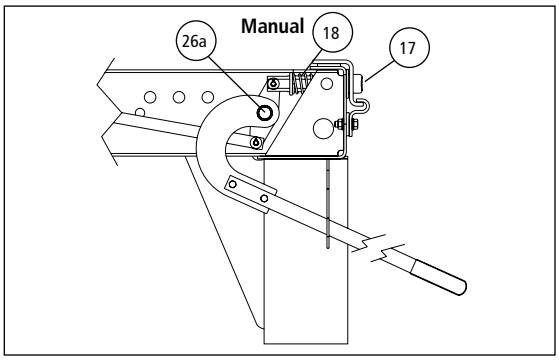

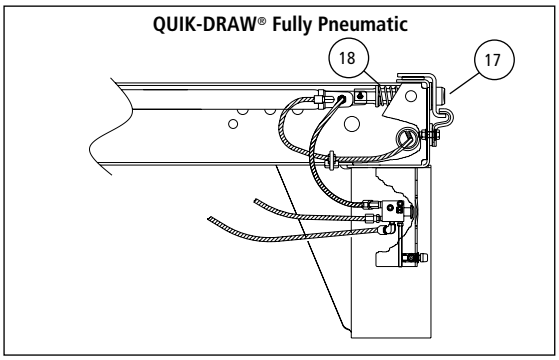

NO LONGER AVAILABLE ON PRODUCTION MODELS OR BOX REPLACEMENTS — PARTS FOR THESE MECHANISMS ARE STILL AVAILABLE

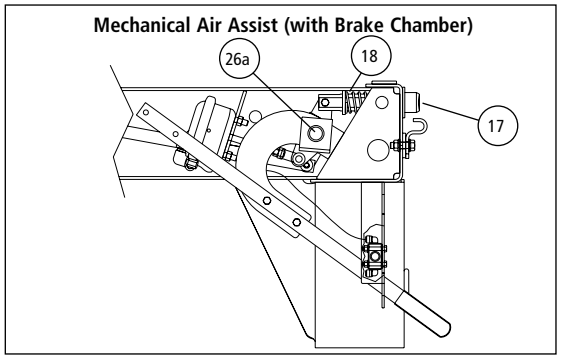

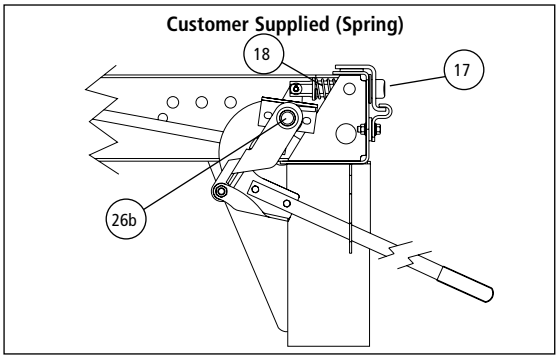

SLIDER BOX ASSEMBLY

ITEM	DESCRIPTION	PART NO.	SYSTEM QTY.	NOTE
17	**LOCKING PIN**			See L751 QUIK-DRAW® Parts List
18	**LOCKING PIN SPRING**			See L751 QUIK-DRAW Parts List
19	**CLEVIS PIN**			See L751 QUIK-DRAW Parts List
20	**SPRING PIN (Units built before Sept. 2012)**			See L751 QUIK-DRAW Parts List
21	**PIN GUIDE** (not shown)			
	Roadside	S-29646-1	2	
	Curbside	S-29646-2	2	
22	**LOCKING PIN LINK**			See L751 QUIK-DRAW Parts List
23	**LOCKING PIN WASHER**			See L751 QUIK-DRAW Parts List
24	**PIN WASHER (Units built before Sept. 2012)**			See L751 QUIK-DRAW Parts List
25	**LOCKING COTTER PIN**			See L751 QUIK-DRAW Parts List
26	**PIPE WELDMENT**			
	26a Manual and mechanical air assist	S-21433	1	
	26b Customer supplied	S-21433-1	1	
27	**BODY RAIL CLIP**			
	27a 3.4" clip height	S-24459	4	Use with 4" hole centers and 1.625" locking pin
	27b 3.8" clip height	S-24460	4	Use with 6" hole centers and 1.375" locking pin
28	**BODY RAIL BOLT**	SA-6900-2	8	1/2"-13" × 1-1/2" flanged bolt
29	**BODY RAIL CLIP SPACER**	A-22367	6	2" clip hole centers
30	**SLIDER WEAR PAD KIT**	S-14342-3	2	Includes (1) slider wear pad and (8) screws

Note: Identification can be found on the roadside slider box rail above the front frame bracket. There is also a blank INTRAAX tag on the inside of the curbside beam.

SUSPENSION ASSEMBLIES

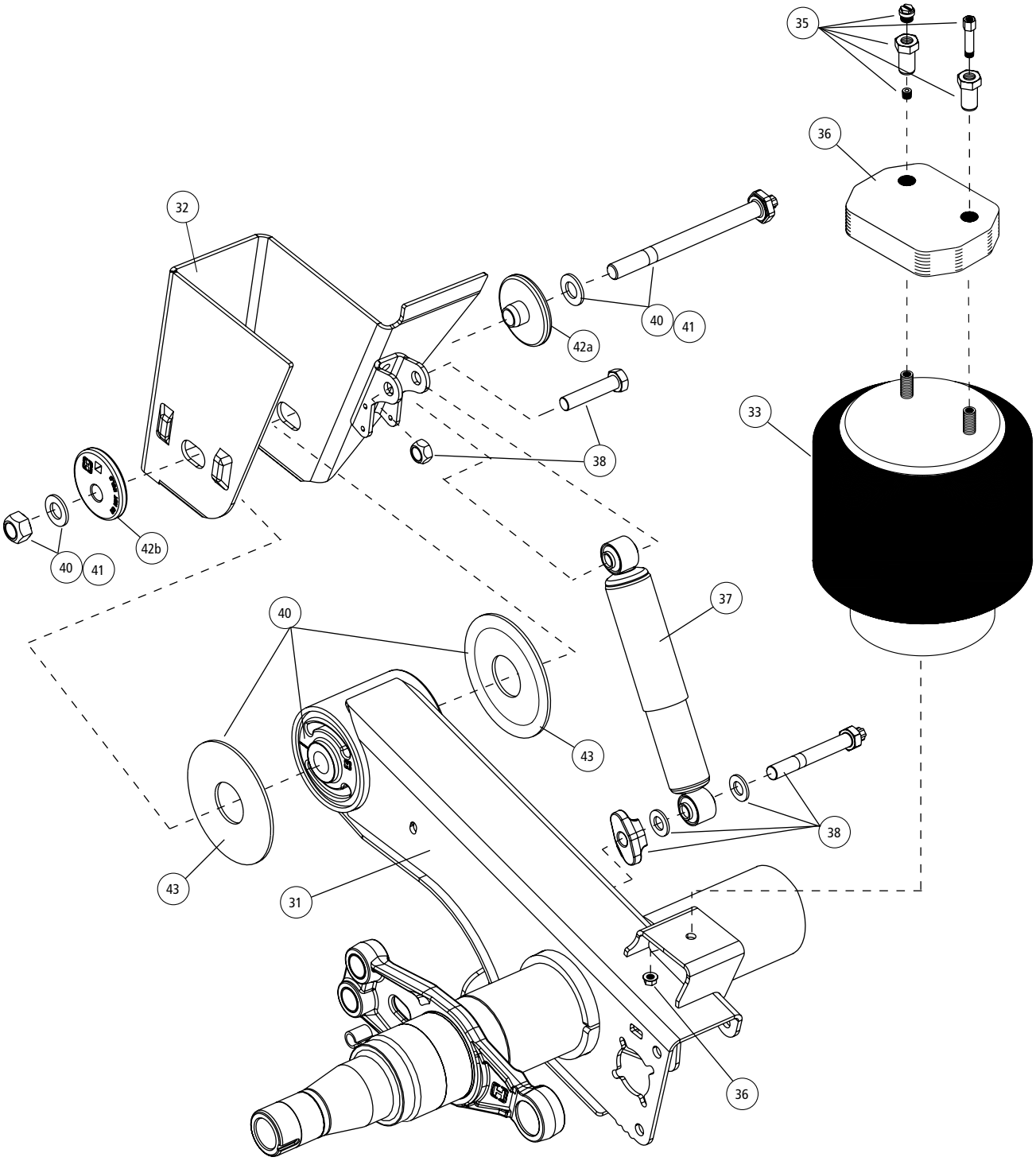

Drawing is a general representation of the actual suspension. Not all components are shown.

SUSPENSION ASSEMBLIES

ITEM	DESCRIPTION	PART NO.	SYSTEM QTY.	NOTE
31	**HALF-TRAAX AXLE/BEAM WELDMENT**	HTRAAX.###	3	Contact Hendrickson for assistance
32	**FRAME BRACKET**			See L1266 Frame Bracket Parts List
33	**AIR SPRING**	S-23748	6	
34	**AIR SPRING BOTTOM DISK** (not shown)	S-21786	6	
35	**AIR SPRING MOUNTING KIT** (per air spring)			
	16" and 17" ride heights	S-22619/2	6	
	16.5" and 18" ride heights	S-22630/2	6	
	19" ride height	S-22632/2	6	
36	**AIR SPRING SPACER**			
	16.5" ride height	B-22510-4	6	3/4" thick spacer
	18" ride height	B-22510-4	6	3/4" thick spacer
37	**SHOCK ABSORBER**	S-24023	6	
38	**SHOCK BOLT KIT** (per shock)	S-24021	6	Includes shear bolt, spacer, washers, hex bolt and hex nut
39	**SHOCK STRAPS** (not shown)	C-23086-2	6	Includes straps, clevis and nylon ties. Use with S-24023 shock.
40	**TRI-FUNCTIONAL® PIVOT BUSHING KIT**[2]	S-24691	6	Includes (1) bushing, (1) pivot bolt kit, (2) bushing tube spacers and lubricant pack
41	**QUIK-ALIGN® PIVOT BOLT KIT**	S-24679	6	Contains 10" bolt, nut and hardened washers
42	**QUIK-ALIGN ALIGNMENT COLLARS**			
	42a Concentric (Inner)	S-20924	6	Pivot hole is in center of collar
	42b Eccentric (Outer)	S-20925	6	Pivot hole is offset from the center of collar
43	**BUSHING TUBE SPACER**	S-21099	12	

OTHER PARTS LISTS

More information can be found in the following documents

Lit. Number	Description
L1055	SURELOK® Parts List
L1102	Slider Accessories and Axle Components Parts List
L949	RTR® READY-TO-ROLL® Parts List
L589	TRI-FUNCTIONAL® Bushing Replacement Tool
L1063	Air Disc Brakes Parts List
L1104	Brake Kits and Components Parts List

1. Other options may exist. Contact Hendrickson for assistance.
2. Bushing tool S-21307 is required to properly re-bush the suspension.

Note: Identification can be found on the roadside slider box rail above the front frame bracket. There is also a blank INTRAAX tag on the inside of the curbside beam.

NOTES

Slider Suspension System

VANTRAAX® HKAL 46K

L1080 - Suspension Components 220

L1102 - Slider Accessories 385

L1266 - Frame Brackets 275

L1287 - Shocks 294

L751 - QUIK-DRAW® 371

L1055 - SURELOK® 375

L1182 - Vehicle Controls 302

L878 - Tire Pressure Control System 319

L1104 - Drum Brake Components 329

L949 - READY-TO-ROLL® Wheel-End Packages
& Air Disc Brake Components 337

VANTRAAX® Low Ride / Ramp Ready HKAL 46K

SLIDER PINS

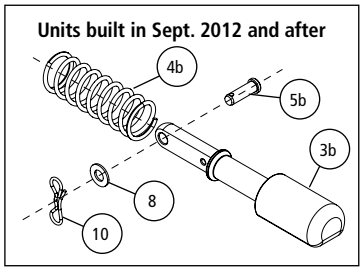

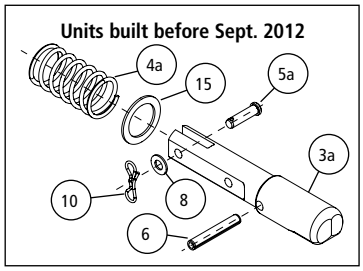

QUIK-DRAW® ACTUATOR ENDS

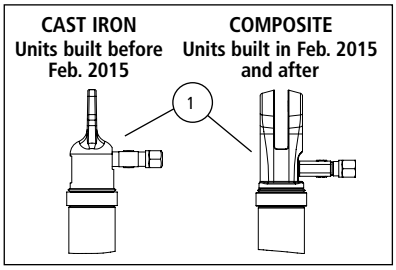

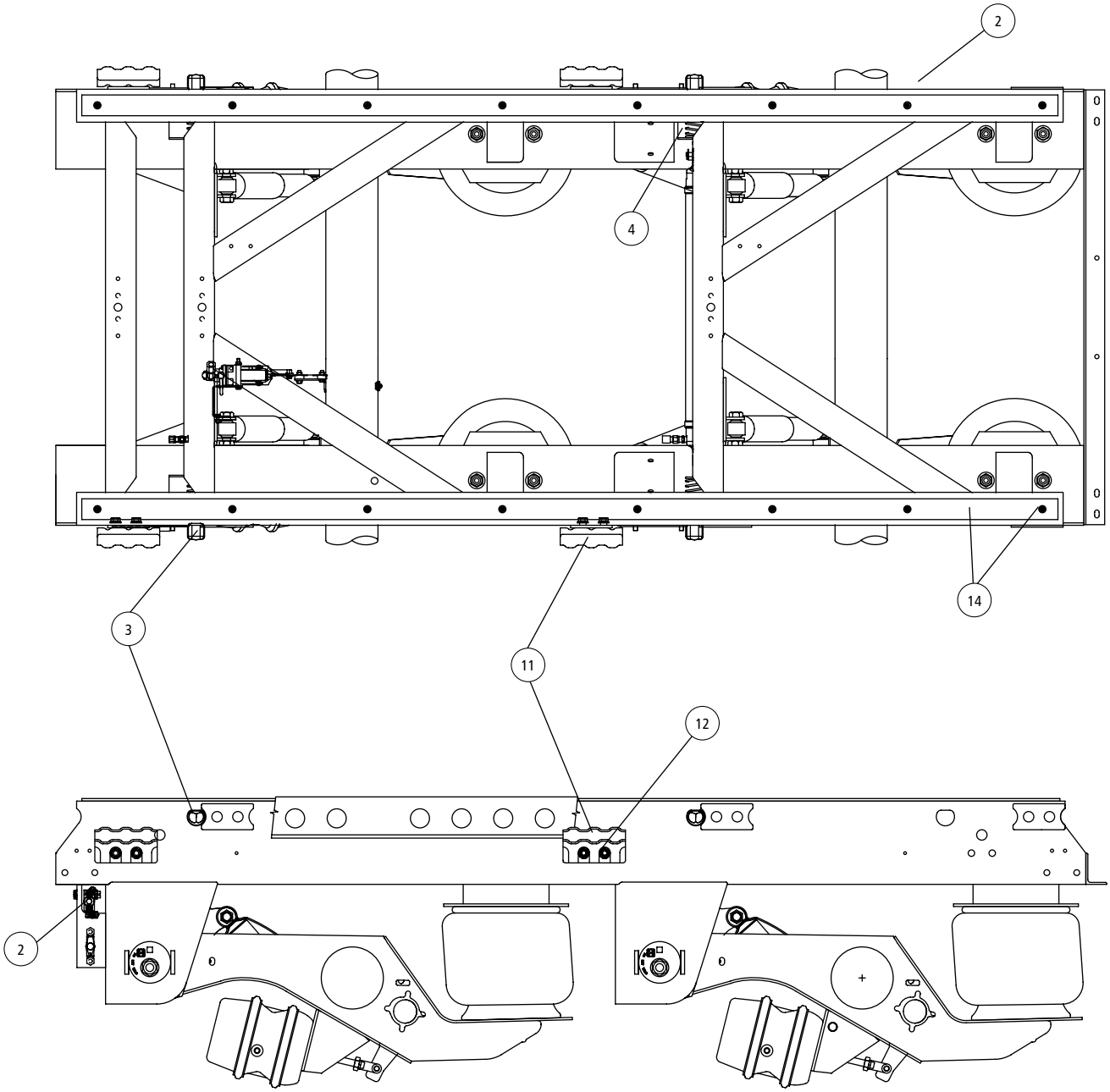

Note: Identification tag can be found on the roadside slider box rail above the front frame bracket. There will also be a blank INTRAAX® tag on the inside of the curbside beam.

SLIDER BOX ASSEMBLY

ITEM	DESCRIPTION	PART NO.	SYSTEM QTY.	NOTE
1	**QUIK-DRAW® PNEUMATIC PIN-PULL MECHANISM**			Refer to L751 - QUIK-DRAW Parts List
2	**AFTERMARKET SLIDER BOX REPLACEMENT**	AMBOX.###	1	Please contact Hendrickson for assistance
3a	**LOCKING PIN** (Units built before Sept. 2012)			
	1.375" diameter pin	S-28290	4	4" (TTMA) & 6" body rail hole spacing
	1.625" diameter pin	S-28289	4	4" body rail hole spacing
3b	**LOCKING PIN** (Units built in Sept. 2012 and after)			
	1.375" diameter pin	S-32389	4	4" (TTMA) & 6" body rail hole spacing
	1.625" diameter pin	S-32388	4	4" body rail hole spacing
4a	**LOCKING PIN SPRING** (Units built before Sept. 2012)			
	48" box with QUIK-DRAW	B-28930	4	3.25" spring
	42" box with QUIK-DRAW	B-22000	4	3.8" spring
4b	**LOCKING PIN SPRING** (Units built in Sept. 2012 and after)			
	42", 48" and 54" box with QUIK-DRAW	B-32500	4	4.5" spring
5a	**CLEVIS PIN** (Units built before Sept. 2012)	SA-5200-6	4	$^3/_8$" × $1^3/_8$"
5b	**CLEVIS PIN** (Units built in Sept. 2012 and after)			
	Cast iron end	SA-5200-8	4	3/8" × 1.16"
	Composite end	SA-5200-10	4	3/8" × 1.82"
6	**SPRING PIN** (Units built before July 2014)	SA-8100-4	4	$^3/_8$" × $2^1/_2$" roll pin
7	**LOCKING PIN LINK** (Not shown)			
	42" box	S-32967-1	2	
	48" box	S-32967-2	2	
	54" box	S-32967-3	2	
8	**LOCKING PIN WASHER**	SA-1500-2	6	$^3/_8$" I.D. flat washer
9	**PIN WASHER** (Units built before July 2014)	S-30641	1	
10	**LOCKING COTTER PIN**	SA-1700-12	6	$^3/_{32}$" × 1" cotter pin
11	**BODY RAIL CLIP**			
	11a 3.4" clip height	S-24459	4	Use with 1.625" locking pin and 4" body rail hole spacing or 1.375" locking pin and 4" body rail hole spacing (TTMA)
	11b 3.8" clip height	S-24460	4	Use with 1.375" locking pin and 6" body rail hole spacing
12	**BODY RAIL BOLT**	SA-6900-2	8	$^1/_2$"-13 × $1^1/_2$" flanged bolt
13	**BODY RAIL CLIP SPACER** (Not shown)	A-22367	4	2" clip hole centers
14	**SLIDER WEAR PAD KIT**	S-14342-3	2	Includes (1) slider wear pad and hardware

Note: Narrow hanger shown. Pin pull mechanisms are identical for both wide and narrow width slider models.

Note: Identification tag can be found on the roadside slider box rail above the front frame bracket. There will also be a blank INTRAAX® tag on the inside of the curbside beam.

VANTRAAX® Low Ride / Ramp Ready HKAL 46K

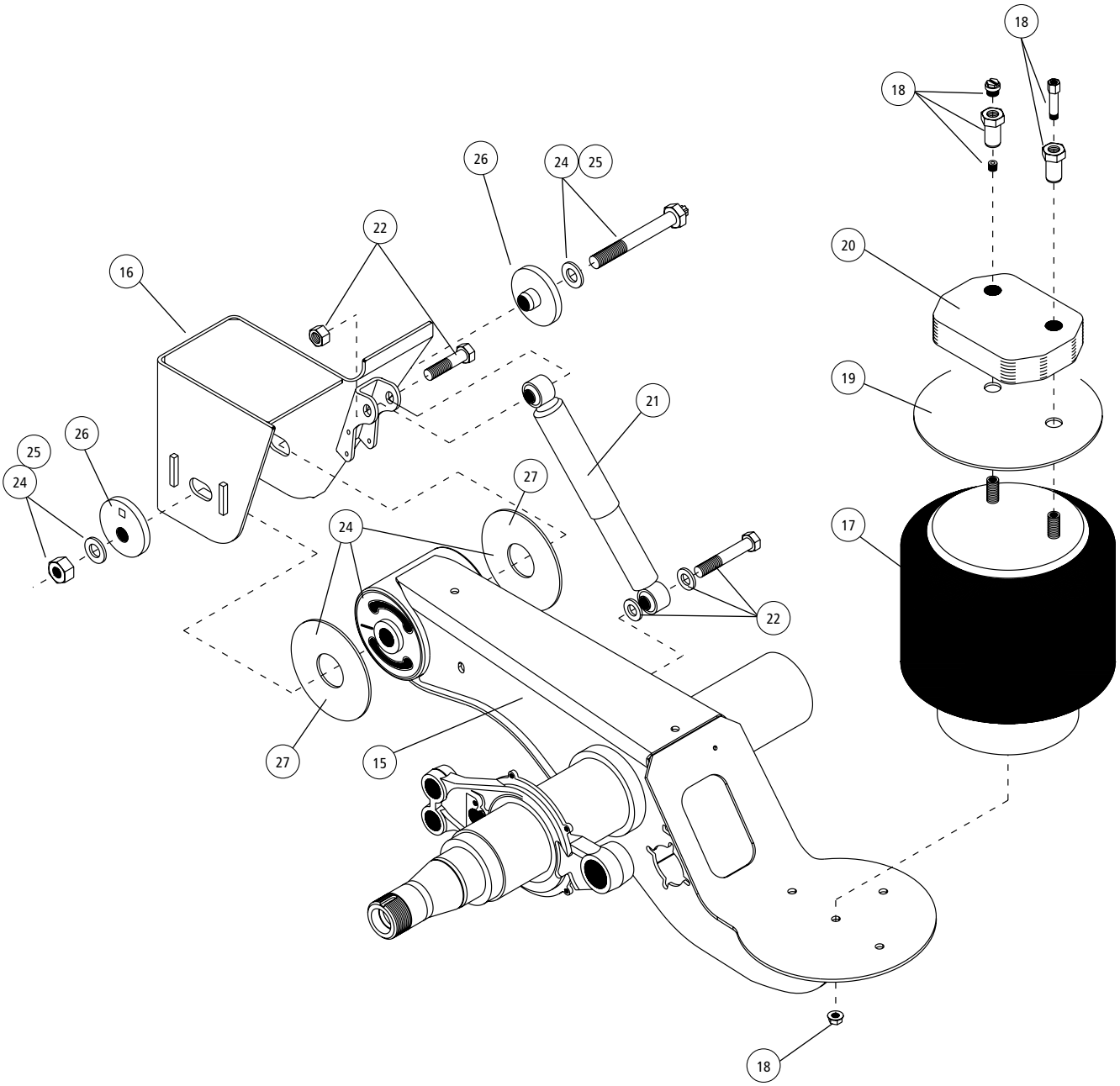

Note: Identification tag can be found on the roadside slider box rail above the front frame bracket. There will also be a blank INTRAAX® tag on the inside of the curbside beam.

SUSPENSION ASSEMBLIES

ITEM	DESCRIPTION	PART NO.	SYSTEM QTY.	NOTE
15	**AXLE / BEAM WELDMENT**	HTRAAX.###	2	Contact Hendrickson for assistance
16	**FRAME BRACKET ASSEMBLY**			
	Roadside	D-26067-1L	2	10" ride heights
	Curbside	D-26067-1R	2	10" ride heights
	Roadside	S-33173-2L	2	11" ride heights
	Curbside	S-33173-2R	2	11" ride heights
17	**AIR SPRING**	S-23613		
18	**AIR SPRING MOUNTING KIT** (per air spring)	S-22631/2	2	Includes Spiralock nuts, pipe plug and flange nut
19	**AIR SPRING PLATE**	S-23294	2	
20	**UPPER AIR SPRING SPACER**	B-22510-2		10" and 11" ride height (1.875" thick)
21	**SHOCK ABSORBER**	S-23566	4	Standard duty
22	**SHOCK BOLT KIT** (per shock)	S-24757/2	4	Includes shear bolt, spacer, washers, hex bolt and hex nut
23	**SHOCK STRAP KIT** (Not shown)	C-23086-1	4	Includes (2) straps, (2) clevis and (4) ties
24	**TRI-FUNCTIONAL® PIVOT BUSHING KIT**[1]	S-24691	2	Includes (1) bushings, (1) pivot bolt kits, (2) bushing tube spacers and lubricant pack
25	**QUIK-ALIGN® PIVOT BOLT KIT**	S-24679	2	Contains 10" bolt, nut and hardened washers
26	**ALIGNMENT COLLAR**			
	26a Concentric	S-20924	4	Pivot bolt hole is centered
	26b Eccentric	S-20925	4	Pivot bolt hole is offset from center
27	**BUSHING TUBE SPACER**	S-21099		

OTHER PARTS LISTS

More information can be found in the following documents

Lit. Number	Description
L751	QUIK-DRAW® Parts List
L1055	SURELOK® Parts List

1. Bushing tool S-21307 is required to properly re-bush the suspension.

Note: Identification tag can be found on the roadside slider box rail above the front frame bracket. There will also be a blank INTRAAX® tag on the inside of the curbside beam.

NOTES

Slider Suspension System

VANTRAAX® HKARL 46K

L1078 - Suspension Components 226

L1102 - Slider Accessories 385

L1266 - Frame Brackets 275

L1287 - Shocks 294

L751 - QUIK-DRAW® 371

L1055 - SURELOK® 375

L1182 - Vehicle Controls 302

L878 - Tire Pressure Control System 319

L1104 - Drum Brake Components 329

L949 - READY-TO-ROLL® Wheel-End Packages
& Air Disc Brake Components 337

SLIDER BOX ASSEMBLY

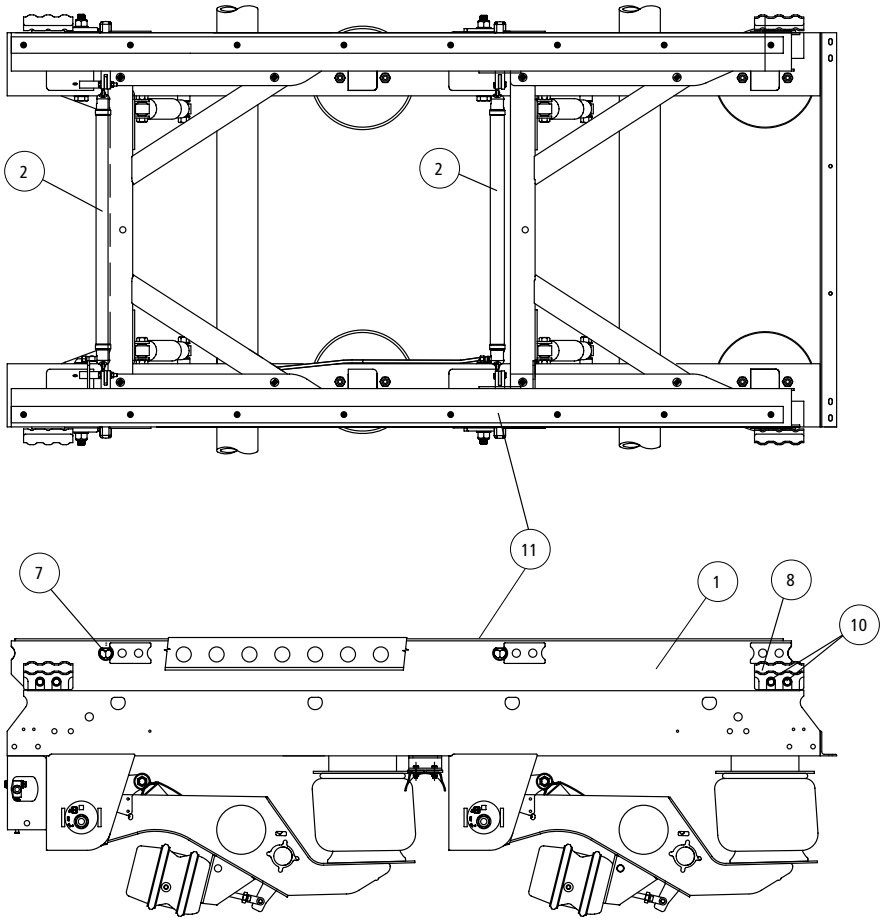

PIN-PULL RELEASE MECHANISM

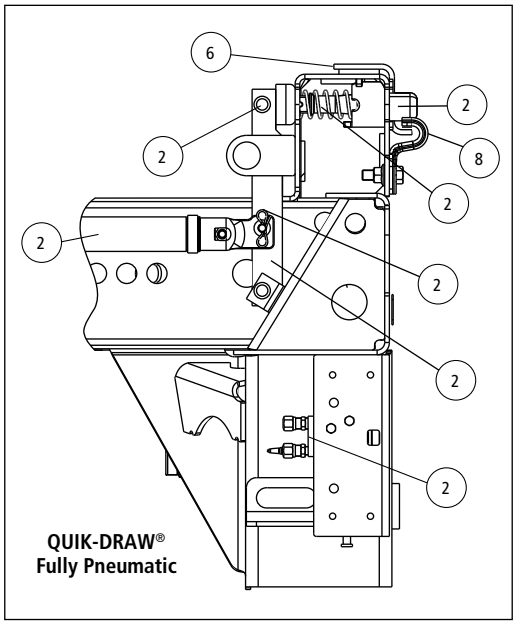

SLIDER PINS

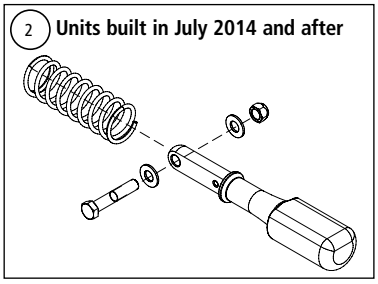

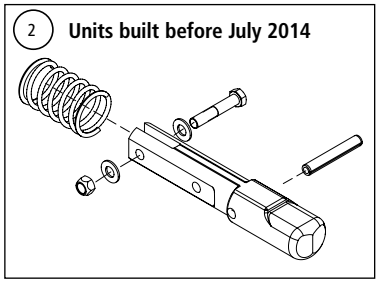

QUIK-DRAW® ACTUATOR ENDS

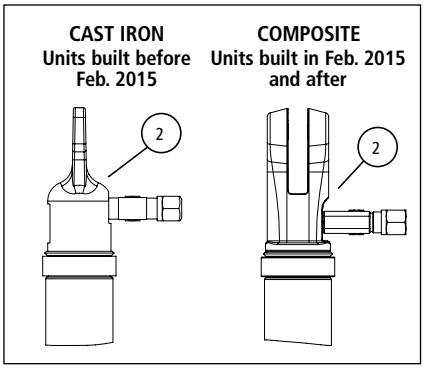

ITEM	DESCRIPTION	PART NO.	SYSTEM QTY.	NOTE
1	**AFTERMARKET SLIDER BOX REPLACEMENT**	AMBOX.###	1	Contact Hendrickson for assistance
2	**QUIK-DRAW® PNEUMATIC PIN-PULL MECHANISM COMPONENTS**			See L751 QUIK-DRAW Parts List
3	**CRANK ARM STRAP** (not shown)	B-24267	1	
4	**CRANK** (not shown)	B-24266	2	
5	**ARM ACTUATOR** (not shown)	B-24437	1	
6	**PIPE WELDMENT** (not shown)	S-21433-1	1	
7	**LINK WELDMENT** (not shown)	B-24413	1	
8	**BODY RAIL CLIP**			
	1.375" Locking Pins	S-24460	4	6" hole centers
		S-24459	4	4" hole centers (TTMA)
	1.625" Locking Pins	S-24459	4	4" hole centers
9	**BODY RAIL CLIP SPACER** (not shown)	A-22367	4	
10	**BODY RAIL CLIP BOLTS**	SA-6900-2	8	1/2" - 13 flanged screw
11	**SLIDER WEAR PAD KIT**	S-14342-3	2	Includes (1) slider wear pad and screws

Note: Identification can be found on the roadside slider box rail above the front frame bracket there will also be a blank VANTRAAX tag on the inside of the curbside beam.

VANTRAAX® Low Ride / Ramp Ready HKARL 46K

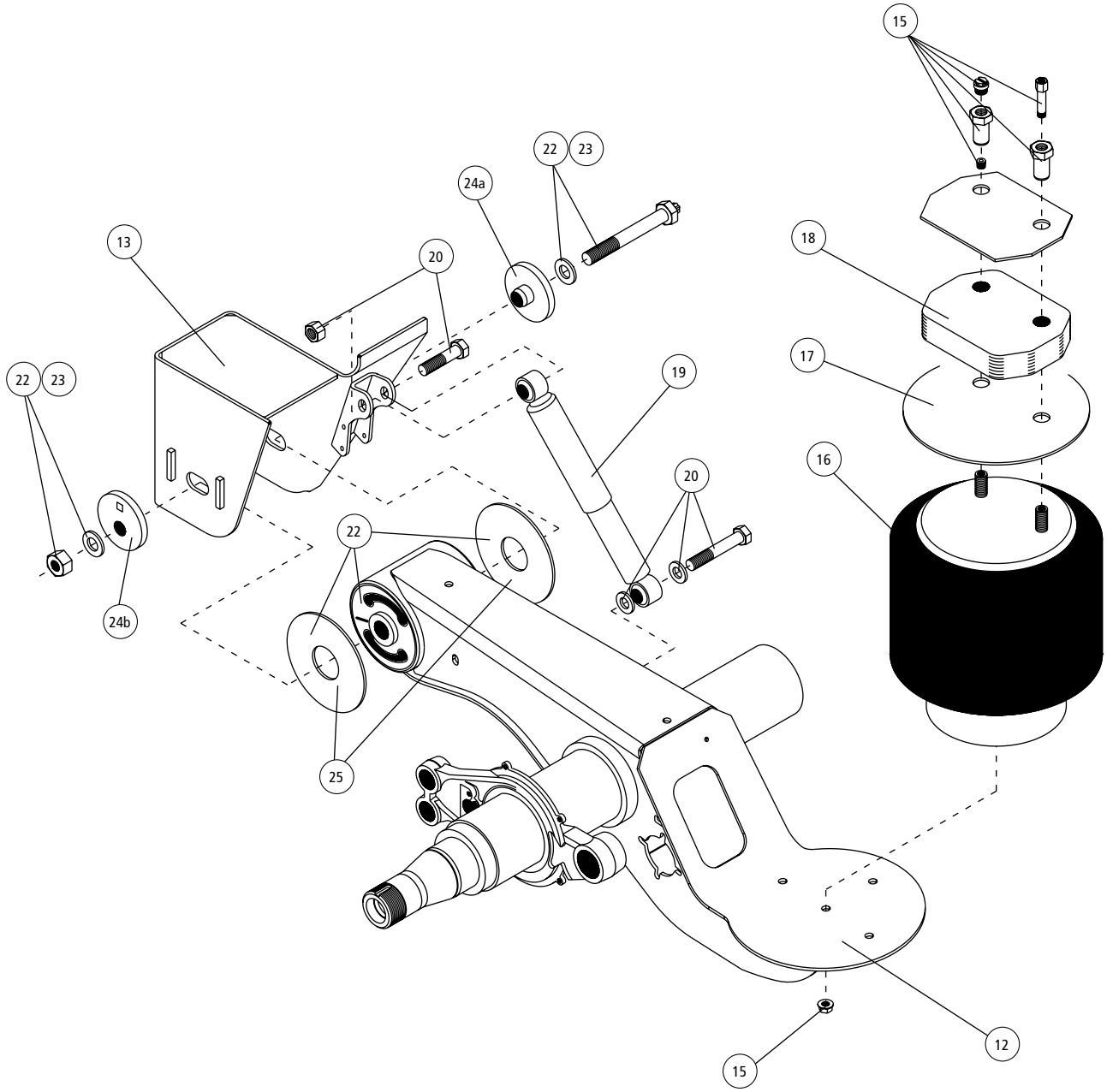

ITEM	DESCRIPTION	PART NO.	SYSTEM QTY.	NOTE
12	**AXLE BEAM WELDMENT**	HTRAAX.###	2	Contact Hendrickson for assistance
13	**FRAME BRACKETS**			See L1266 Frame Bracket Parts List
14	**ABS WELD-ON BRACKET** (not shown)	S-27117	4	
15	**AIR SPRING MOUNTING KIT**	S-22631/2	4	A-22490-5 also required for 9" RH
16	**AIR SPRING**		4	
	9", 10" and 11" ride height	S-23613	4	
	12" ride height	S-23614	4	
17	**AIR SPRING MOUNTING PLATE**	S-23294	4	
18	**AIR SPRING SPACER**	B-22510-2	4	Not required for 9" RH
19	**SHOCK ABSORBER**			See L1287 Shock Parts List
	Drum Brakes	S-23566	4	
	Air Disc Brakes (not shown)	S-25436	4	
20	**SHOCK BOLT KIT**	S-24757/2	4	Includes (2) hex head screws and (2) nuts
	Forward Mounting	S-24757/2	4	
	Rear Mounting	S-2157/2	4	
21	**SHOCK STRAP KIT** (not shown)	C-23086-1	4	Includes (2) straps, clevis and ties
22	**TRI-FUNCTIONAL® PIVOT BUSHING KIT**[1]	S-24691	4	Includes (1) bushings, (1) pivot bolt kits (2) bushing tube spacers and lubricant pack
23	**QUIK-ALIGN® PIVOT BOLT KIT**	S-24679	4	Contains 7" bolt, nut and hardened washers
24	**ALIGNMENT COLLAR**			
	24a Concentric (inner)	S-20924	4	Pivot bolt hole is centered
	24b Eccentric (outer)	S-20925	4	Pivot bolt hole is offset from center
25	**BUSHING TUBE SPACER**	S-21099	8	Inner metal outer diameter dimension of TRI-FUNCTIONAL® Bushing is 2.2"; inner hole dimension of BTS is 2.38"

OTHER PARTS LISTS

More information can be found in the following documents

Lit. Number	Description
L1055	SURELOK® Parts List
L1102	Slider Accessories and Axle Components Parts List
L949	Wheel-ends and Brakes Parts List
L589	TRI-FUNCTIONAL® Bushing Replacement Tool
L1104	Brake Kits and Components Parts List

1. Bushing tool S-21307 is required to correctly re-bush the suspension.

Note: Identification can be found on the roadside slider box rail above the front frame bracket there will also be a blank VANTRAAX tag on the inside of the curbside beam.

NOTES

Slider Suspension System

VANTRAAX® HKANL 23K

L1102 - Slider Accessories 385

L1266 - Frame Brackets 275

L1287 - Shocks 294

L751 - QUIK-DRAW® 371

L1055 - SURELOK® 375

L1182 - Vehicle Controls 302

L878 - Tire Pressure Control System 319

L1104 - Drum Brake Components 329

L949 - READY-TO-ROLL® Wheel-End Packages
& Air Disc Brake Components 337

Slider Suspension System

HK Slider Series

L536 - Suspension Components 233

L1266 - Frame Brackets 275

L1287 - Shocks 294

L1055 - SURELOK® 375

L1182 - Vehicle Controls 302

L878 - Tire Pressure Control System 319

L1104 - Drum Brake Components 329

L949 - READY-TO-ROLL® Wheel-End Packages
& Air Disc Brake Components 337

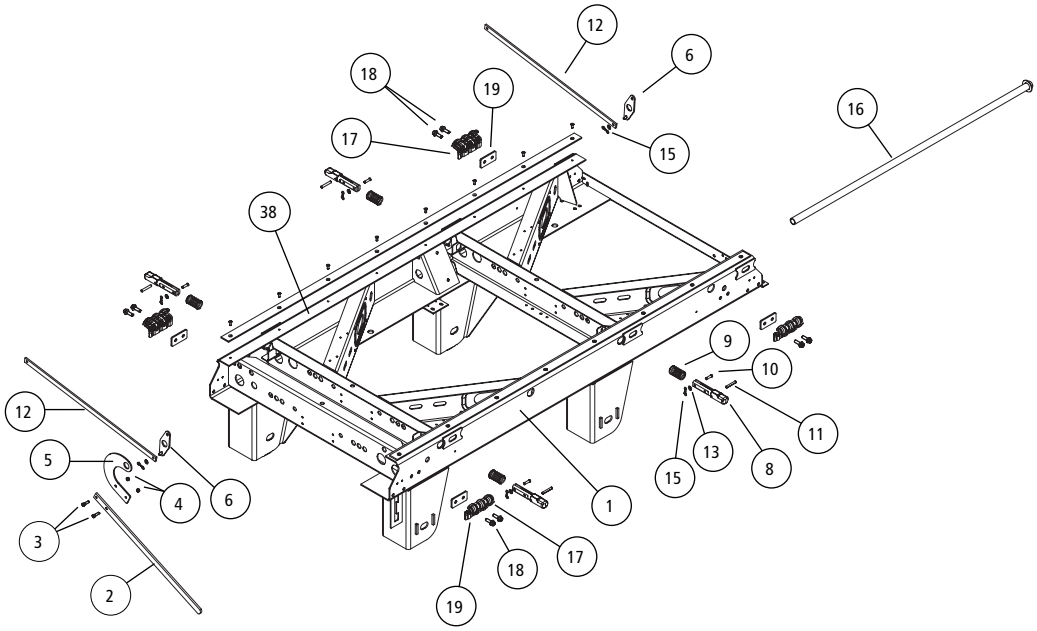

SLIDER PINS

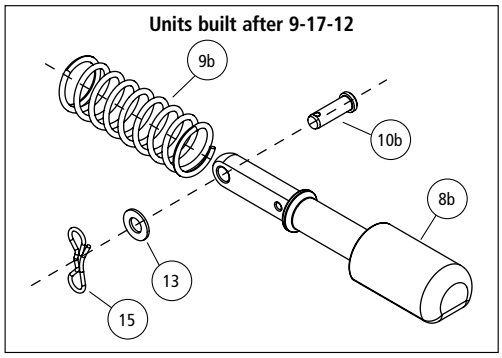

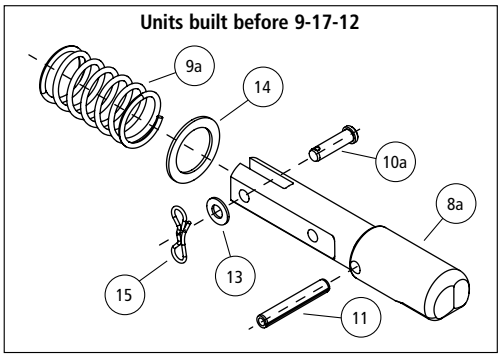

CURRENT RELEASE MECHANISMS

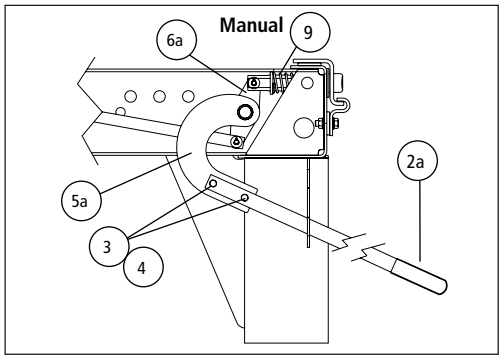

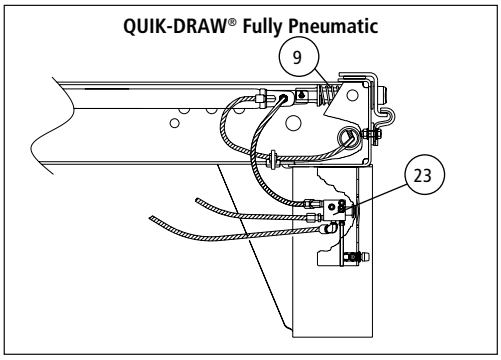

NO LONGER AVAILABLE ON PRODUCTION MODELS OR BOX REPLACEMENTS — PARTS FOR THESE MECHANISMS ARE STILL AVAILABLE

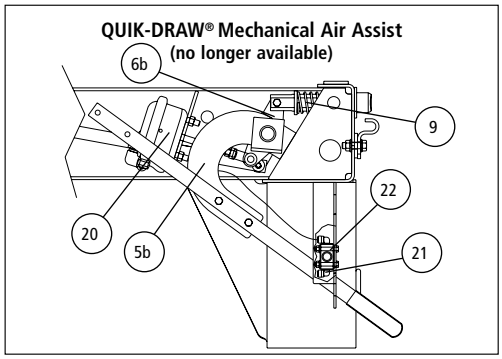

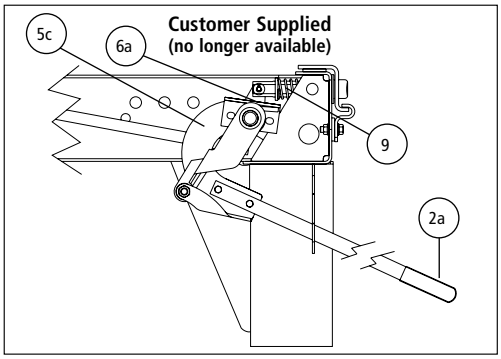

ITEM	DESCRIPTION	PART NO.	QTY.	NOTE
1	**AFTERMARKET BOX REPLACEMENT**	AMBOX.###	1	Please contact Hendrickson for assistance
2	**HANDLE**			
	2a Manual and customer supplied	S-25592	1	Handle and grip assembly
3	**HANDLE BOLT**	SA-1100-10	2	3/8"-16 x 1 1/4" hex head bolt, grade 5
4	**HANDLE NUT**	SA-9000-5	2	3/8"-16 lock nut, grade B
5	**HANDLE MOUNT**			
	5a Manual	C-21275	1	
	5b QUIK-DRAW® mechanical air assist	C-23231	1	
	5c Customer supplied	S-23534	1	Includes crank arm bolt kit
6	**CRANK ARM WELDMENT**			
	6a Manual and customer supplied	B-33010	2	For front and rear of slider box
	6b Mechanical air assist	B-33010	1	For rear of slider box
7	**CRANK ARM BOLT KIT** (not shown)	A-22041	1	Includes bolt, flat washer, lock washer and nut
8a	**LOCKING PIN** (Units built before 9-17-12)			
	1.375" diameter pin	S-28290	4	4" Body rail hole spacing (TTMA)
	1.375" diameter pin	S-28290	4	6" Body rail hole spacing
	1.625" diameter pin	S-28289	4	4" Body rail hole spacing
8b	**LOCKING PIN** (Units built after 9-17-12)			
	1.375" diameter pin	S-32389	4	4" Body rail hole spacing (TTMA)
	1.375" diameter pin	S-32389	4	6" Body rail hole spacing
	1.625" diameter pin	S-32388		4" Body rail hole spacing
9a	**LOCKING PIN SPRING** (Units built before 9-17-12)			
	42" box with manual or mechanical air assist	B-28930	4	3.25" Spring
	48" box with manual, QUIK-DRAW or mechanical air assist	B-28930	4	3.25" Spring
	42" box with QUIK-DRAW	B-22000	4	3.8" Spring
	42" and 48" box with customer supplied spring mechanism	B-22000	4	3.8" Spring
9b	**LOCKING PIN SPRING** (Units built after 9-17-12)			
	42", 48" and 54" box with QUIK-DRAW	B-32500	4	
10a	**CLEVIS PIN** (Units built before 9-17-12)	SA-5200-6	4	3/8" x 1 3/8"
10b	**CLEVIS PIN** (Units built after 9-17-12)	SA-5200-8	4	3/8" x 1 1/5"
11	**SPRING PIN**	SA-8100-4	4	3/8" x 2 1/2" roll pin
12	**LOCKING PIN LINK**			
	12a 42" box	S-32967-1	2	
	12b 48" box	S-32967-2	2	
	12c 54" box	S-32967-3	2	
13	**LOCKING PIN WASHER**	SA-1500-2	6	3/8" I.D. flat washer
14	**PIN WASHER**	S-30641	1	
15	**LOCKING PIN LINK COTTER PIN**	SA-1700-12	6	3/32" x 1" cotter pin
16	**PIPE WELDMENT**			
	16a Manual and customer supplied	S-21433	1	
	16b QUIK-DRAW (chamber actuated)	S-21433-1	1	
17	**BODY RAIL CLIP**			
	17a 3.4" clip height	S-24459	4	Use with 4" hole centers and 1.625" locking pin
	17b 3.8" clip height	S-24460	4	Use with 6" hole centers and 1.375" locking pin
	17c Universal 2" spacer - 4" or 6" height	S-22366	4	Hole centers measure 2"
18	**BODY RAIL BOLT**	SA-6900-2	8	1/2"-13 x 1 1/2" flanged bolt, grade 8
19	**BODY RAIL CLIP SPACER**	A-22367	4	Hole centers measure 2"
20	**AIR ACTUATOR CHAMBER**	A-23039	1	Type 12 modified
21	**AIR VALVE**	VS-23224	1	Air valve with fittings
22	**VALVE CAP**	A-22977	1	
23	**QUIK-DRAW II VALVE**	VS-25224		3-way auto reset valve with fittings
		VS-25223		3-way auto reset value without fittings

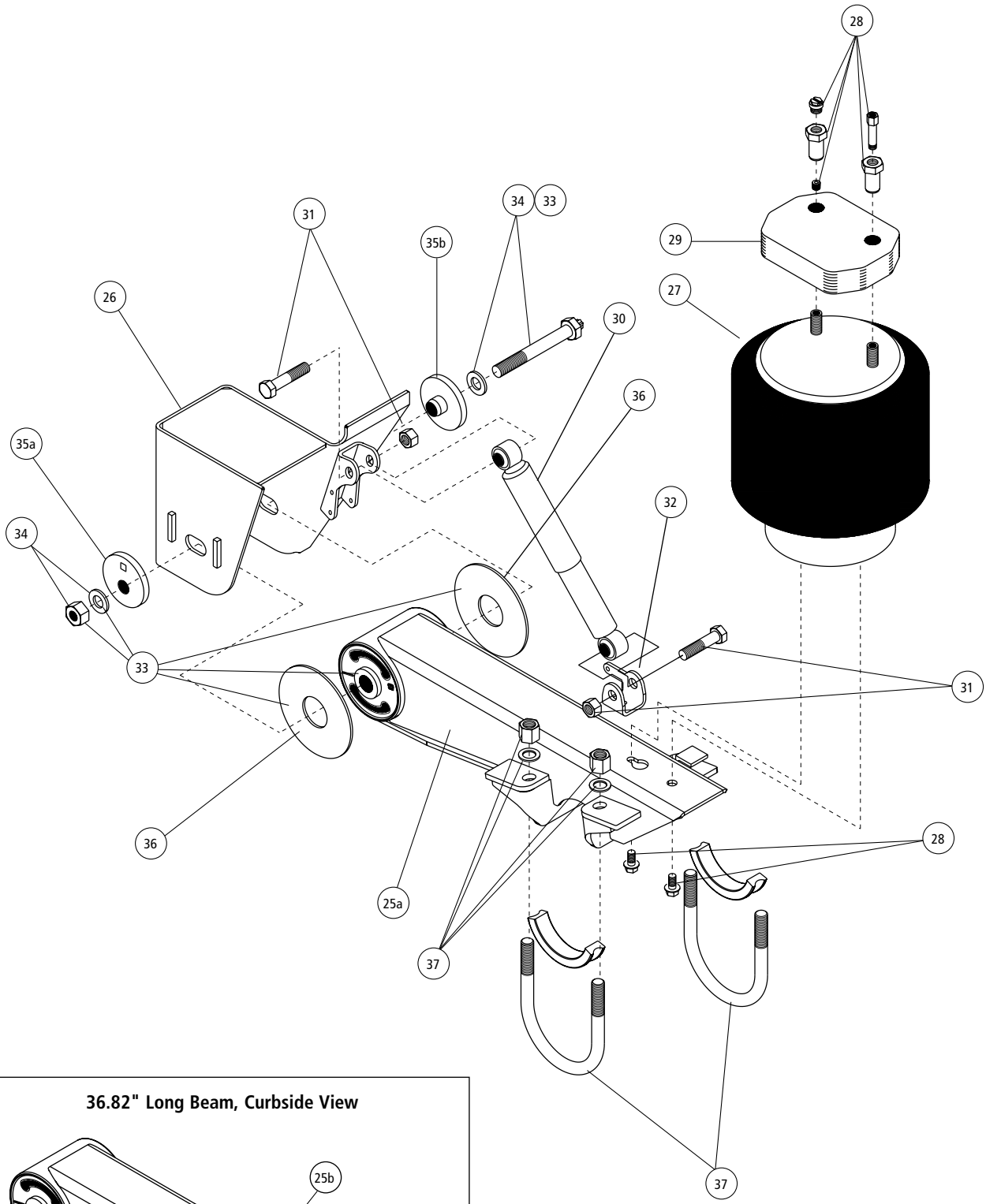

36.82" Long Beam, Curbside View

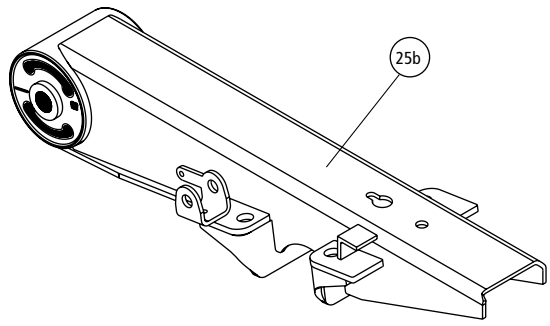

ITEM	DESCRIPTION	PART NO.	QTY.	NOTE
24	**VALVE KNOB KIT** (not shown)	VS-25849		For old style valve with plastic knob
25	**BEAM ASSEMBLY**[1]			
	25a Front or rear, overall length is 32.65"			
	Roadside	S-20000-1		
	Curbside	S-20000-2		
	25b Rear, overall length is 36.82" (For units with SURELOK®)			
	Roadside	S-21736-1		
	Curbside	S-21736-2		
26	**FRAME BRACKET**			Contact Hendrickson for assistance
	26a 16" ride height			
	Roadside	S-21291-1	2	
	Curbside	S-21291-2	2	
	26b 16.5" ride height			
	Roadside	D-22386-1	2	
	Curbside	D-22386-2	2	
	26c 17" ride height			
	Roadside	S-21497-1	2	
	Curbside	S-21497-2	2	
	26d 18" ride height			
	Roadside	S-21802-1	2	
	Curbside	S-21802-2	2	
	26e 19" ride height			
	Roadside	D-21803-1	2	
	Curbside	D-21803-1	2	
27	**AIR SPRING**			
	27a HK190T sliders	S-22045	4	
	27b HK230 sliders	S-22046	4	
28	**AIR SPRING MOUNTING KITS**			
	28a 16" ride height / no spacer (Per air spring)	S-22907/2	4	Includes (1) 1/4"-18 NPFT plug, (2) 1/2"-13 flanged screw and (2) 3/4"-16 flanged nut
	28b 16 1/2" and 17" ride height / 3/4" Thick spacer (Per air spring)	S-22908/2	4	Includes (1) 1/4"-18 NPFT plug, (2) extension nuts, .65" and (2) 1/2"-13 flanged screw
	28c 18" ride height / 1 7/8" thick spacer (Per air spring)	S-22909/2	4	Includes (1) 1/4"-18 NPFT plug, (1) air fitting, 2.10", (2) extension nuts, 1.73", (2) 1/2"-13 flanged screw and (1) plug
	28d 19" ride height / 3 1/8" thick spacer (Per air spring)	S-22910/2	4	Includes (1) 1/4"-18 NPFT plug, (1) air fitting, 3.10", (2) extension nuts, 2.65", (2) 1/2"-13 flanged screw and (1) plug
29	**AIR SPRING SPACER**			
	29a 3/4" thick spacer	B-22510-4	4	16 1/2" and 17" ride height
	29b 1 7/8" thick spacer	B-22510-2	4	18" ride height
	29c 3 1/8" thick spacer	B-22510-3	4	19" ride height
30	**SHOCK ABSORBER**	S-21292	4	
31	**SHOCK ABSORBER BOLT KIT**	S-20031/2	4	
32	**LOWER SHOCK CLEVIS**	S-20069	4	
33	**TRI-FUNCTIONAL® BUSHING KIT**[2]	S-24691	4	Includes bushing, pivot bolt kit, wear pads and lube

[1]Measure beam assembly before ordering. Some models have 32.65" beam assemblies for both the front and rear; others have 32.65" beam assemblies on the front and 36.82" beam assemblies on the rear. Units with 36.82" beam assemblies on the rear are designed to accommodate SURELOK®. Units with the 32.65" beam assemblies on the rear require the addition of a weld-on beam extension to accommodate SURELOK.

[2]Bushing tool S-21307 is required to properly re-bush the suspension.

ITEM	DESCRIPTION	PART NO.	QTY.	NOTE
34	**QUIK-ALIGN® Pivot Bolt Kit (Per Hanger)**	S-24679	4	Includes (1) 10" shear type bolt, (1) torque heavy hex nut and (2) hardened steel washers
35	**ALIGNMENT COLLARS**			
	35a Eccentric (Outer)	S-20925	4	Pivot bolt hole is offset from center of collar
	35b Concentric (Inner)	S-20924	4	Pivot bolt hole is in center of collar
36	**BUSHING TUBE SPACERS**	S-21099	8	
37	**U-BOLT KIT**	S-21140		Order S-21140/4 for a single U-Bolt, nut and washer. Kit includes: (4) U-Bolt, cornered radius, (8) nuts, and (8) washers
38	**SLIDER WEAR PAD KIT**	S-14342-3	2	Includes (1) slider wear pad and (8) screws

Slider Suspension System

Past Generation Sliders

L085 - Suspension Components 239

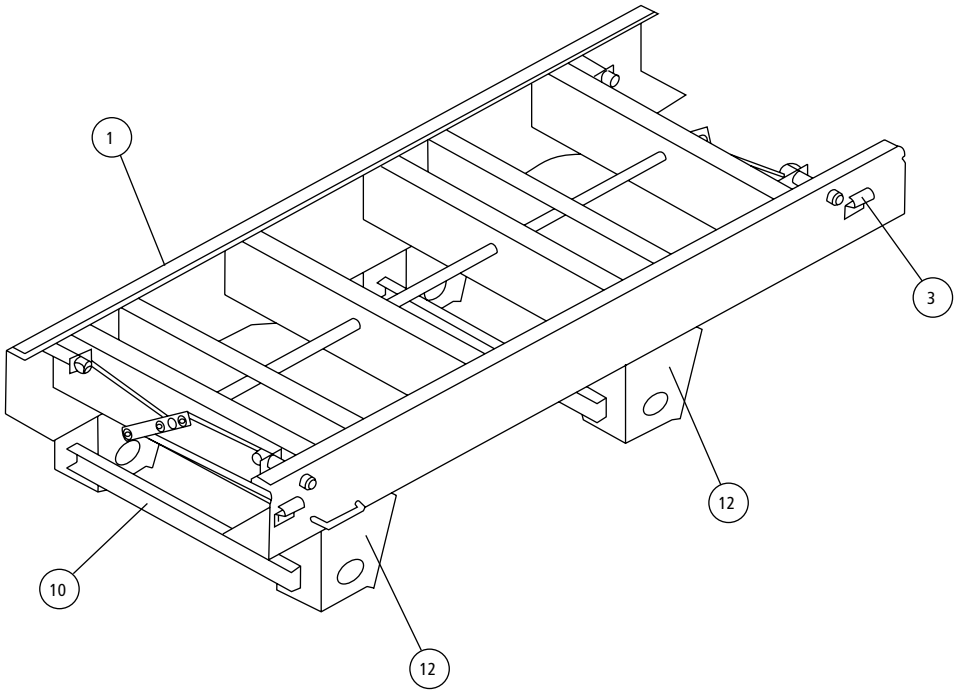

Style A — Standard Release Mechanism

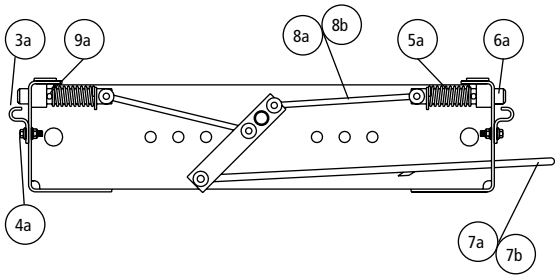

Style B — Customer Supplied Release Mechanism

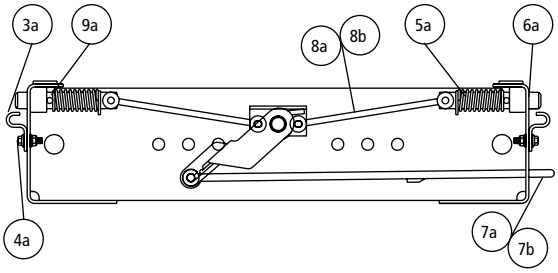

Not all replacement parts available through Hendrickson

Style C — Customer Supplied Release Mechanism

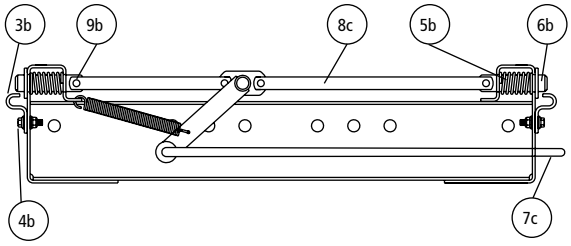

Not all replacement parts available through Hendrickson

Past Generation Sliders

ITEM	DESCRIPTION	PART NO.	QTY.	NOTE
1	**SLIDER WEAR PAD KIT**			
	1a 49" axle centers	S-14342-1	2	Includes (1) wear pad and (8) screws
2	**WEAR PAD SCREW** (not shown)	A-29372	16	
3	**BODY RAIL CLIP**			
	3a Style A and Style B	S-14108	4	Hole centers measure 1-½"
	3b Style A and Style B	S-22366	4	Hole centers measure 2"
	3c Style C	9635-00		Hole centers measure 4"; includes rail clip bolt. Contact Hendrickson for assistance
4	**BODY RAIL CLIP BOLT**			
	4a Style A and Style B	SA-6900-2	8	½"-13 × 1-½" flanged bolt, grade 8
	4b Style C	N/A		Included in part # 9635-00
5	**LOCKING PIN SPRING**			
	5a Style A and Style B	S-14102	4	
	5b Style C	12779-01		Contact Hendrickson for assistance
6	**LOCKING PIN**			
	6a Style A and Style B	S-14104	4	
	6b Style C	12716-01		Contact Hendrickson for assistance
7	**ACTUATOR ARM**			
	7a Style A — 42" box width	S-26010-2	1	
	Style B — 42" box width	B-14573-2	1	
	7b Style A — 48" box width	S-26010-1	1	
	Style B — 48" box width	B-14573-2	1	
	7c Style C — 42" and 48" box widths	12781-01		Contact Hendrickson for assistance
8	**LOCKING PIN LINK**			
	8a Style A — 42" box width	B-14112-2	4	
	Style B — 42" box width	B-14112-4	4	
	8b Style A — 48" box width	B-14112-1	4	
	Style B — 48" box width	B-14112-3	4	
	8c Style C — 42" box width	11412-02		Contact Hendrickson for assistance
	Style C — 48" box width	11412-16		
9	**LOCKING PIN ROD**			
	9a Style A and Style B	S-14106	4	
	9b Style C	12780-1		Contact Hendrickson for assistance
10	**FRAME BRACKET CHANNEL**	A-1631-6	2	For units with welded alignment only
11	**BEAM ASSEMBLY** (see back page)			
	11a Front or Rear; overall length is 32.65"			
	Roadside	S-20000-1		Bushing included
	Curbside	S-20000-2		Bushing included
	11b Rear; overall length is 36.82"			
	Roadside	S-21736-1		For units equipped with SURELOK®. Bushing included
	Curbside	S-21736-2		For units equipped with SURELOK Bushing included
	11c Front or Rear; overall length is 34.57"			
	Roadside	S-20186-1		HS300T only
	Curbside	S-20186-2		HS300T only
12	**FRAME BRACKET** (see back page)			Contact Hendrickson for assistance
13	**AIR SPRING** (see back page)			
	13a HS190T Sliders	S-20223	4	
	13b HS230 Sliders	S-20010	4	
	13c HS300T Sliders	S-4771	4	
14	**AIR SPRING BOLT KIT** (see back page)			
	14a HS190T and HS230	S-20033/2	4	
	14b HS300T	S-4903	2	
15	**ALIGNMENT COLLARS** (see back page)			
	15a Welded alignment	S-2770	8	
	15b Eccentric (outer) QUIK-ALIGN®	S-20925	4	Pivot bolt hole is offset from center of collar
	15c Concentric (inner) QUIK-ALIGN	S-20924	4	Pivot bolt hole is in center of collar

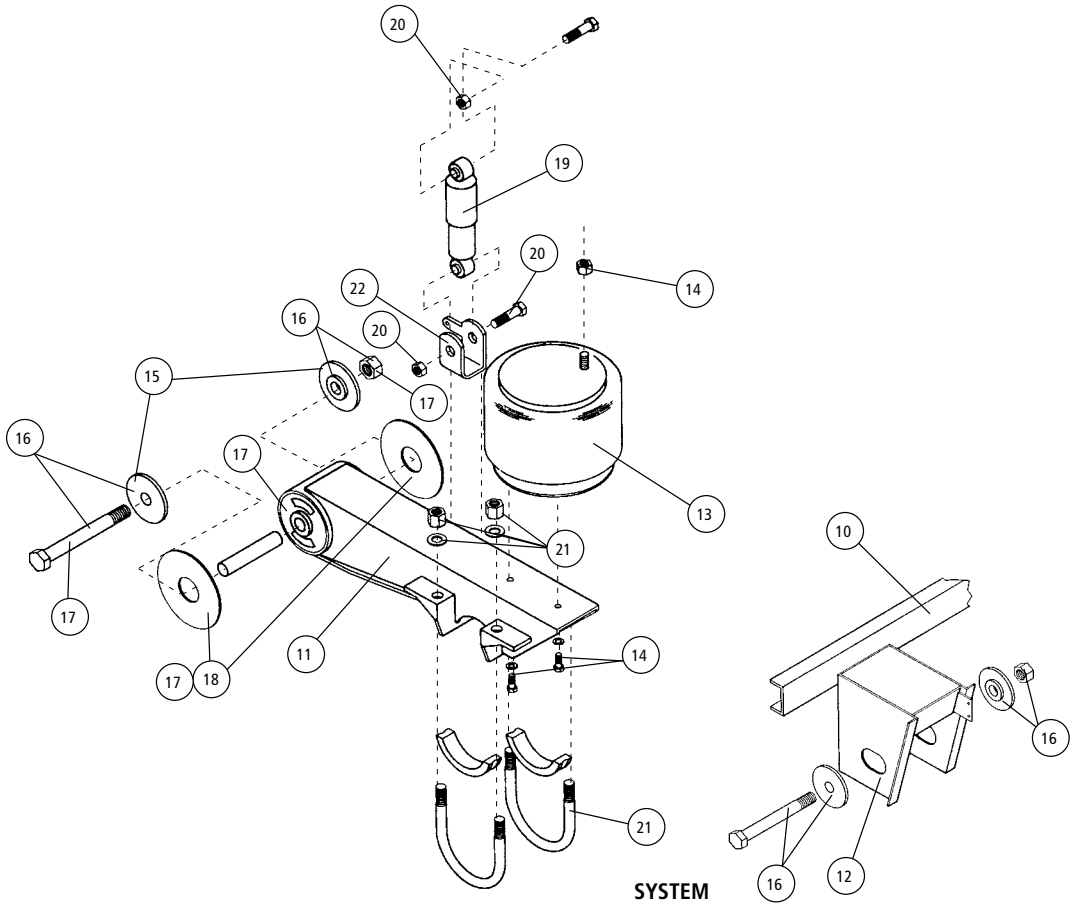

ITEM	DESCRIPTION	PART NO.	QTY.	NOTE
16	**PIVOT BOLT KIT**			
	16a Welded alignment	S-3646	4	Includes bolt, nut and delrin liner
	16b QUIK-ALIGN[1]	S-24679	4	Includes bolt, HEXNUT and washers
17	**TRI-FUNCTIONAL® BUSHING KIT[2]**			
	17a Welded alignment	S-6914	4	
	17b QUIK-ALIGN	S-24691	4	
18	**BUSHING TUBE SPACERS**	S-21099	8	
19	**SHOCK ABSORBER**			
	19a HS190T Sliders	S-20001	4	
	19b HS230 Sliders	S-20002	4	
	19c HS300T Sliders	S-20126	4	
20	**SHOCK ABSORBER BOLT KIT**	S-20031/2	4	
21	**U-BOLT KIT**	S-21140	2	
22	**LOWER SHOCK CLEVIS**	S-20069	4	

1. Best installed with Hendrickson's E-20 socket S-24536 (1-inch drive sleeveless), S-25119 (1-inch drive sleeve) or S-24303 (3/4-inch drive sleeveless).
2. Bushing tool S-21307 is required to correctly re-bush the suspension.

Slider Suspension System

INTRAAX® SP Platform Slider System

L916 - INTRAAX® SP Platform Slider 243

L931 - INTRAAX® SP Platform Slider 247

L1102 - Slider Accessories 385

L1266 - Frame Brackets 275

L1287 - Shocks 294

L751 - QUIK-DRAW® 371

L1055 - SURELOK® 375

L1182 - Vehicle Controls 302

L878 - Tire Pressure Control System 319

L1104 - Drum Brake Components 329

L949 - READY-TO-ROLL® Wheel-End Packages
& Air Disc Brake Components 337

SLIDER BOX ASSEMBLY

Single Axle Slider

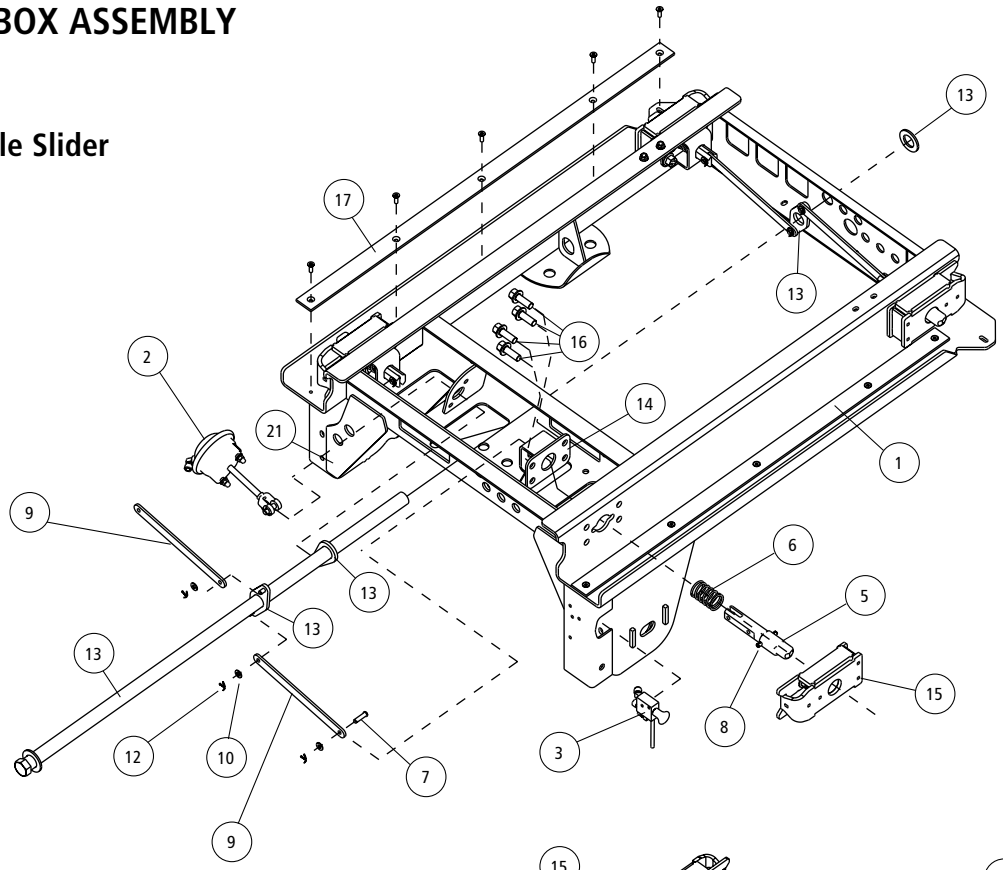

Tandem Axle Slider

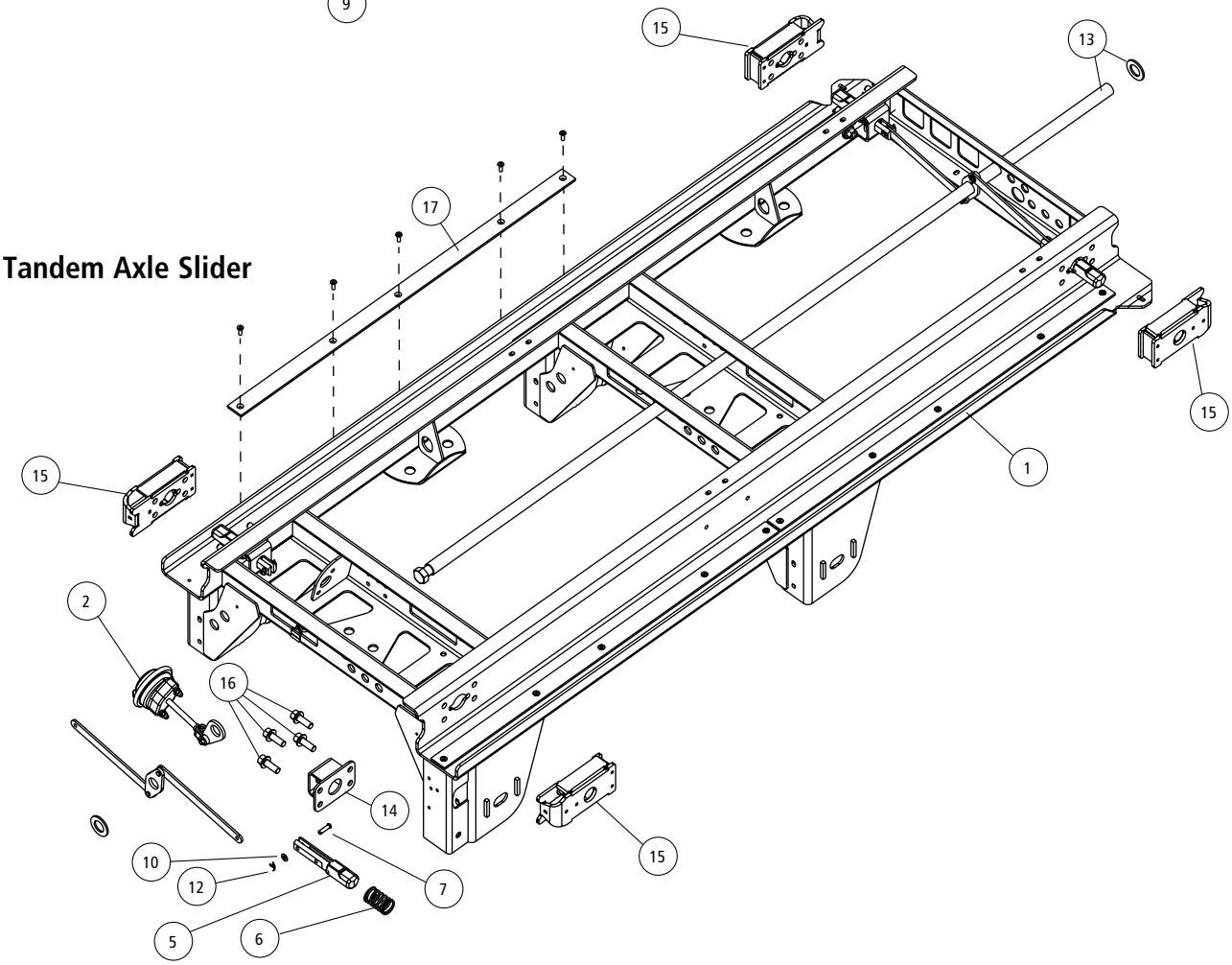

SLIDER BOX ASSEMBLY

All suspensions are 23K capacity; system capacity for tandem is 46K; system capacity for tridem is 69K .
I-beam centers are 37" and 38" for 42" box width with 71.5" axle track.
I-beam centers are 43" and 44" for 48" box width with 77" axle track.
Axle spacing or "spread" is measured from center of front axle to center of rear axle.

ITEM	DESCRIPTION	PART NO.	TANDEM SYSTEM QTY.	NOTE
1	**AFTERMARKET SLIDER BOX REPLACEMENT**	AMBOX.XX	1	Please contact Hendrickson for assistance
2	**BRAKE CHAMBER**	A-23039	1	Type 12 modified
3	**QUIK-DRAW® VALVE**			See L751 QUIK-DRAW® Parts List
4	**QUIK-DRAW VALVE KNOB with SCREW SET** (Not shown)			See L751 QUIK-DRAW Parts List
5	**LOCKING PIN**			See L751 QUIK-DRAW Parts List
6	**LOCKING PIN SPRING**			See L751 QUIK-DRAW Parts List
7	**CLEVIS PIN**			See L751 QUIK-DRAW Parts List
8	**SPRING PIN**			See L751 QUIK-DRAW Parts List
9	**LOCKING PIN LINK**			See L751 QUIK-DRAW Parts List
10	**LOCKING PIN WASHER**			See L751 QUIK-DRAW Parts List
11	**PIN WASHER**			See L751 QUIK-DRAW Parts List
12	**LOCKING PIN LINK COTTER PIN**			See L751 QUIK-DRAW Parts List
13	**PIPE WELDMENT KIT**			Includes pipe weldment, crank weldment, crank arm actuator and pipe ring stop
	Single axle	S-28044-1	1	51" weldment
	Tandem, 49" axle spread	S-28044-2	1	99" weldment
	Tandem, 60" axle spread	S-28044-3	1	111" weldment
	Tandem, 72" axle spread	S-28044-4	1	123" weldment
14	**INNER LOCK PIN CAGE ASSEMBLY**	S-27000	4	
15	**OUTER LOCK PIN CAGE REPLACEMENT KITS**			
	No shims, per slider	S-28658-1	1	Includes (4) pin cages and bolts
	With outer shims, per slider	S-28658-2	1	Includes (4) pin cages and bolts
	No shims	S-28658-3	2	Includes (1) curbside and (1) roadside cage and bolts
	With outer shims	S-28658-4	2	Includes (1) curbside and (1) roadside cage and bolts
16	**PIN CAGE BOLT** (Bolts are included in kits)	SA-6900-20	16	5/8"-11 x 1.75 flanged bolt
17	**SLIDER WEAR PAD KIT**	S-28640	2	Includes (2) slider wear pads and hardware
18	**STINGER** (Not shown)	S-27028-1	1	Includes (1) stinger and hardware

NOTE: Identification tag can be found on the roadside slider box rail above the front frame bracket gusset. There is also a blank INTRAAX tag on the insid of the curbside beam.

SLIDER PINS

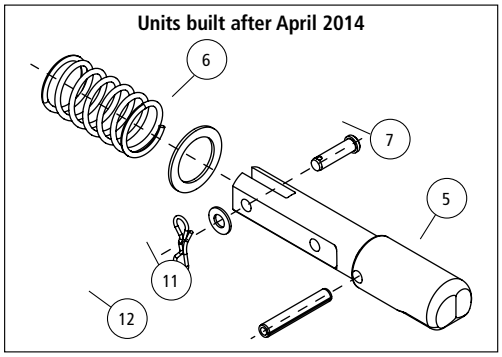

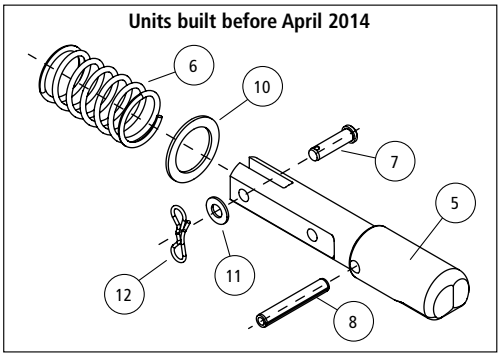

SUSPENSION ASSEMBLY

Narrow Frame Bracket Assembly, Tapered Beam

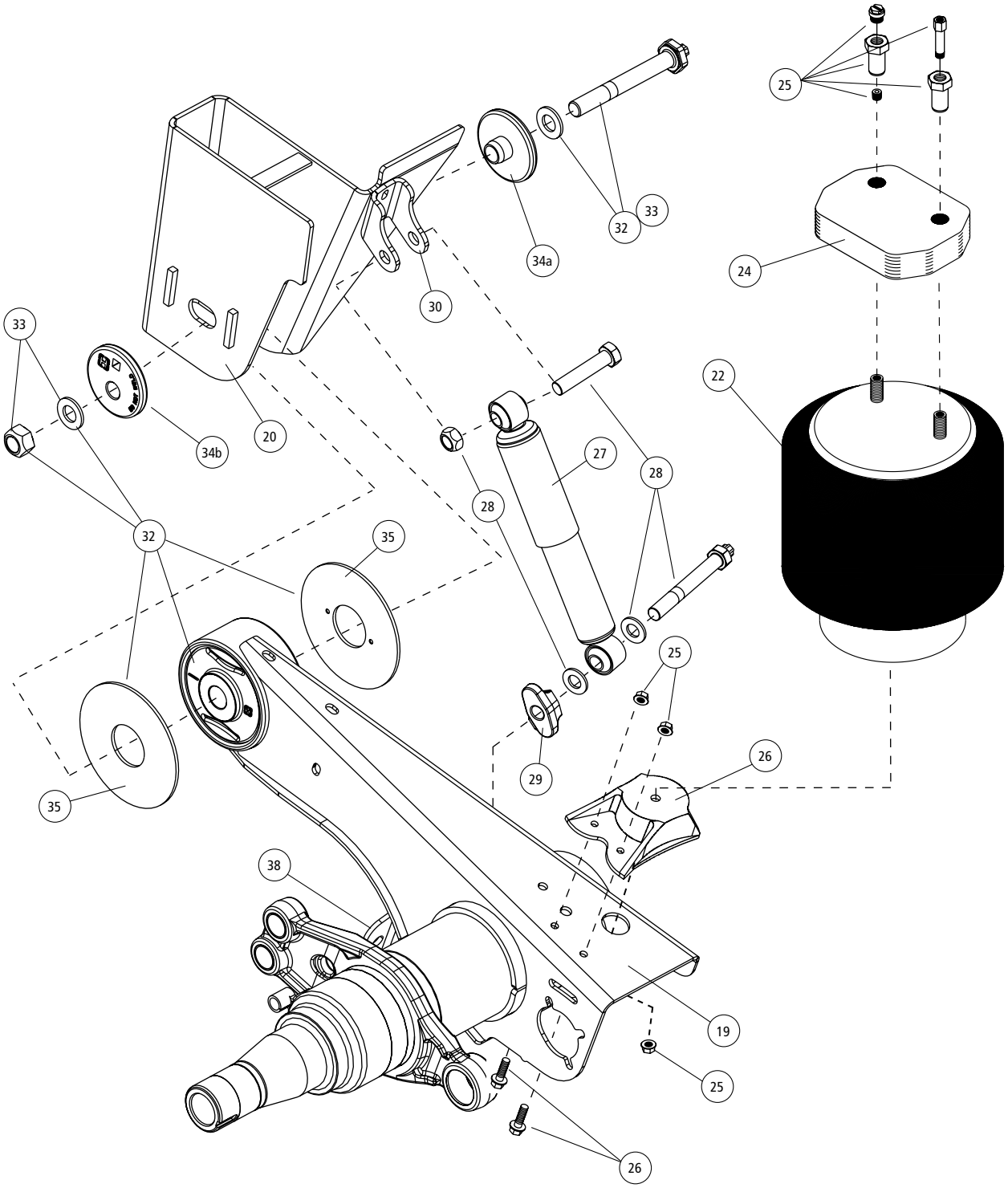

SUSPENSION ASSEMBLY

All top-mount suspensions are narrow frame bracket / tapered beam assemblies.
All suspensions are 23K capacity; system capacity for tandem is 46K; system capacity for tridem is 69K .
Top-mount ride heights are 13.5" - 17."

ITEM	DESCRIPTION	PART NO.	QTY. PER AXLE	NOTE
19	**AXLE/BEAM WELDMENT**	HTRAAX.XXX		Contact Hendrickson for assistance
20	**FRAME BRACKET**			See L1266 Frame Bracket Parts List
21	**FRAME BRACKET GUSSET** (Shown on page 2)	S-27330	2	For weld-on, winged or wingless frame attachments; for ride heights of 12" to 17"
22	**AIR SPRING**			
	Standard	S-21800	2	13.5" to 17" ride height
	Low pressure	S-20901	2	13.5" to 17" ride height
23	**AIR SPRING MOUNTING PLATE** (Not shown)	S-20905	2	12" to 19" ride height
24	**AIR SPRING SPACER**	B-22510-1	2	Plastic 1-1/8" Thick Spacer; 17" ride height
25	**AIR SPRING MOUNTING KIT** (Per air spring)			
		S-22619/2	2	13.5" to 16" ride height
		S-22630/2	2	17" ride height
26	**AIR SPRING SUPPORT CASTING**			
		S-27447-1	1	13.5" and 14" ride height
		S-27447-3	1	15" ride height
		S-27447-4	1	16" and 17" ride height
27	**SHOCK ABSORBER**			
	Standard travel	S-23566	2	12" - 17" ride height
	Extended service with high damping	S-24023	2	12" - 17" ride height
28	**SHOCK ABSORBER BOLT KIT** (Per shock)	S-24049/2	2	One (1) required per shock
29	**SHOCK SPACER** (Included in Kit 28)	S-27196	2	
30	**SHOCK MOUNT CLEVIS**	C-20918	2	
31	**SHOCK STRAP KIT** (Not shown)			Includes (2) straps, (2) clevis and nylon ties
	Standard shock	C-23086-1	1	12" to 17" ride height
	Extended service with high damping	C-23086-2	1	12" to 17" ride height
32	**TRI-FUNCTIONAL® BUSHING KIT**[1]	S-26321	1	Includes (2) bushings, shear bolts, nuts, hardened washers and pivot bolt kit, bushing tube spacers and lube
33	**QUIK-ALIGN® PIVOT BOLT KIT**	S-24705	2	Includes 7" shear-type bolt, nut and washers
34	**ALIGNMENT COLLARS**			
	34a Concentric alignment collar (Inner)	S-20924	2	Pivot bolt hole is centered
	34b Eccentric alignment collar (Outer)	S-20925	2	Pivot bolt hole is offset from center
35	**BUSHING TUBE SPACER**	S-26807	4	
36	**BRAKE KITS COMPONENTS** (Not shown)			See L1104
37	**AXLE COMPONENTS** (Not shown)			See L1102
38	**BRAKE CHAMBER BRACKET**	S-24697	2	

1. Bushing tool, S-24736 is required to properly re-bush the suspension.

SLIDER BOX ASSEMBLY

Single Axle Slider

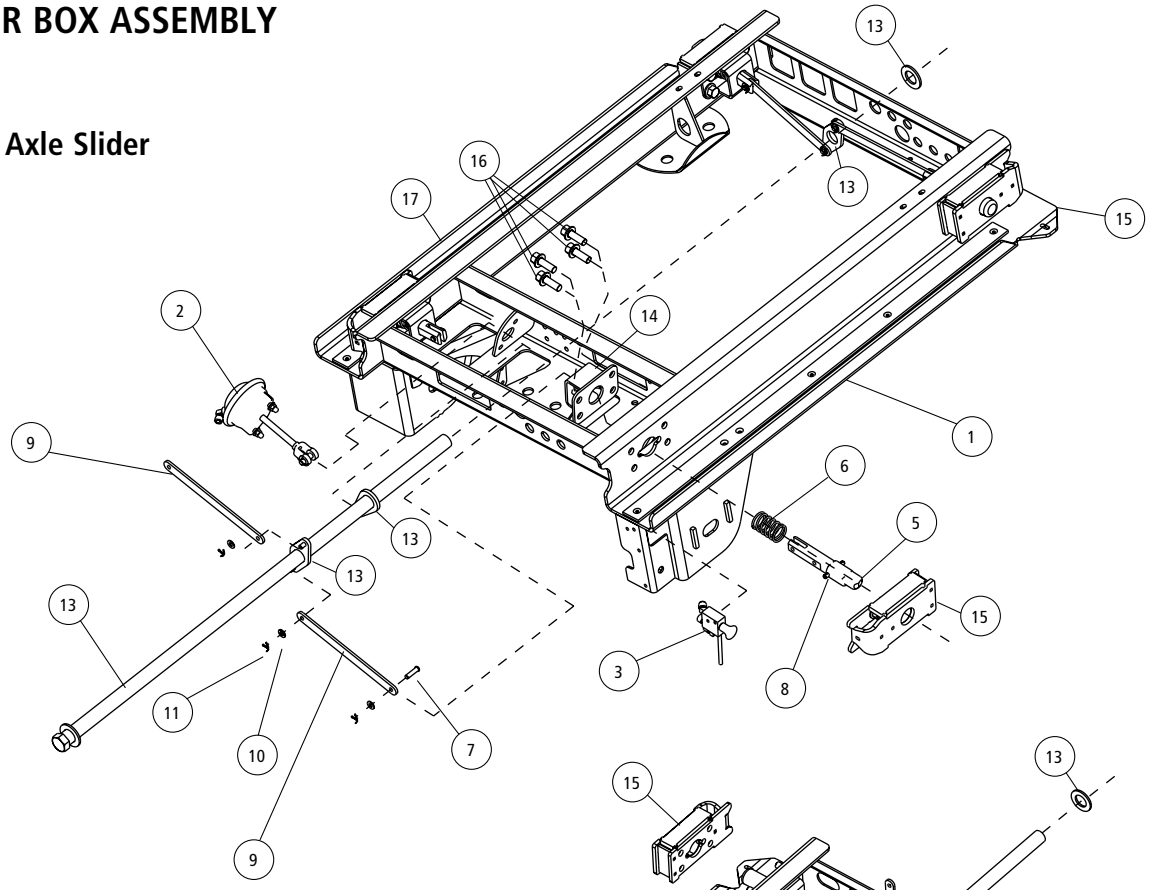

Tandem Axle Slider

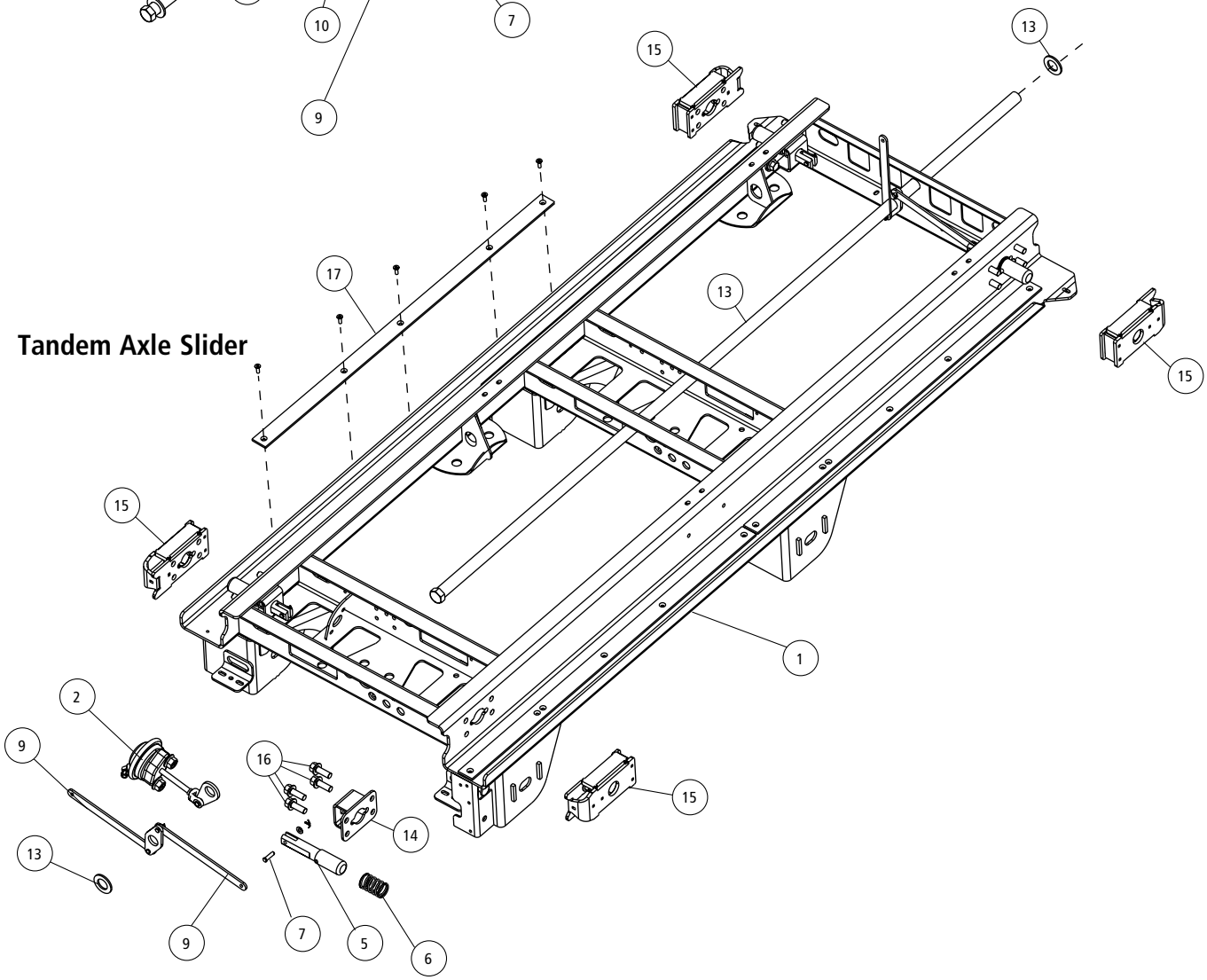

SLIDER BOX ASSEMBLY

All suspensions are 23K capacity; system capacity for tandem is 46K.
I-beam centers are 37" and 38" for 42" box width with 71.5" axle track.
I-beam centers are 43" and 44" for 48" box width with 77.5" axle track.
Axle spacing or "spread" is measured from center of front axle to center of rear axle.

ITEM	DESCRIPTION	PART NO.	TANDEM SYSTEM QTY.	NOTE
1	**AFTERMARKET SLIDER BOX REPLACEMENT**	AMBOX.XX	1	Please contact Hendrickson for assistance
2	**BRAKE CHAMBER**	A-23039	1	Type 12 modified
3	**QUIK-DRAW® VALVE**			See L751 QUIK-DRAW® Parts List
4	**QUIK-DRAW VALVE KNOB with SCREW SET** (Not shown)			See L751 QUIK-DRAW Parts List
5	**LOCKING PIN**			See L751 QUIK-DRAW Parts List
6	**LOCKING PIN SPRING**			See L751 QUIK-DRAW Parts List
7	**CLEVIS PIN**			See L751 QUIK-DRAW Parts List
8	**SPRING PIN**			See L751 QUIK-DRAW Parts List
9	**LOCKING PIN LINK**			See L751 QUIK-DRAW Parts List
10	**LOCKING PIN WASHER**			See L751 QUIK-DRAW Parts List
11	**PIN WASHER**			See L751 QUIK-DRAW Parts List
12	**LOCKING PIN LINK COTTER PIN**			See L751 QUIK-DRAW Parts List
13	**PIPE WELDMENT KIT**			Includes pipe weldment, crank weldment, crank arm actuator and pipe ring stop
	Single Axle	S-28044-1	1	51" weldment
	Tandem, 49" Axle Spread	S-28044-2	1	99" weldment
	Tandem, 60" Axle Spread	S-28044-3	1	111" weldment
	Tandem, 72" Axle Spread	S-28044-4	1	123" weldment
14	**INNER LOCK PIN CAGE ASSEMBLY**	S-27000	4	
15	**OUTER LOCK PIN CAGE REPLACEMENT KITS**			
	No Shims, Per Slider	S-28658-1	1	Includes (4) pin cages and (16) bolts
	With Outer Shims, Per Slider	S-28658-2	1	Includes (4) pin cages and (16) bolts
	No Shims, front	S-28658-3	2	Includes (1) curbside and (1) roadside cage and bolts
	With Outer Shims, Rear	S-28658-4	2	Includes (1) curbside and (1) roadside cage and bolts
16	**PIN CAGE BOLT** (Bolts are Included in Kits)	SA-6900-20	16	Four (4) per cage, (16) per slider
17	**SLIDER WEAR PAD KIT**	S-28641	1	Quantity of (1) needed for single; (2) needed for tandem. Includes (2) 49" pads and (10) screws
18	**STINGER** (Not Shown)			

NOTE: Identification tag can be found on the roadside slider box rail above the front frame bracket gusset. There is also a blank INTRAAX® tag on the inside of the curbside beam.

SLIDER PINS

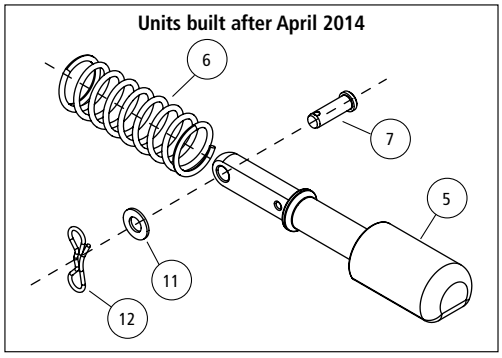

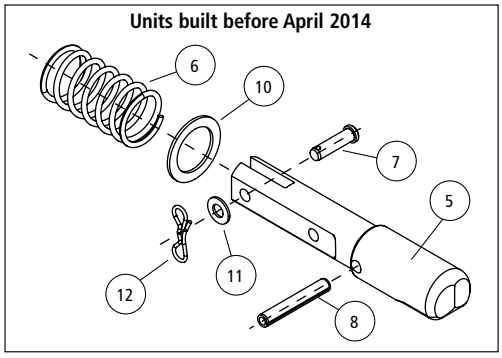

LOW-RIDE SUSPENSION ASSEMBLY - AAZL

Wide Frame Bracket Assembly, Straight Beam

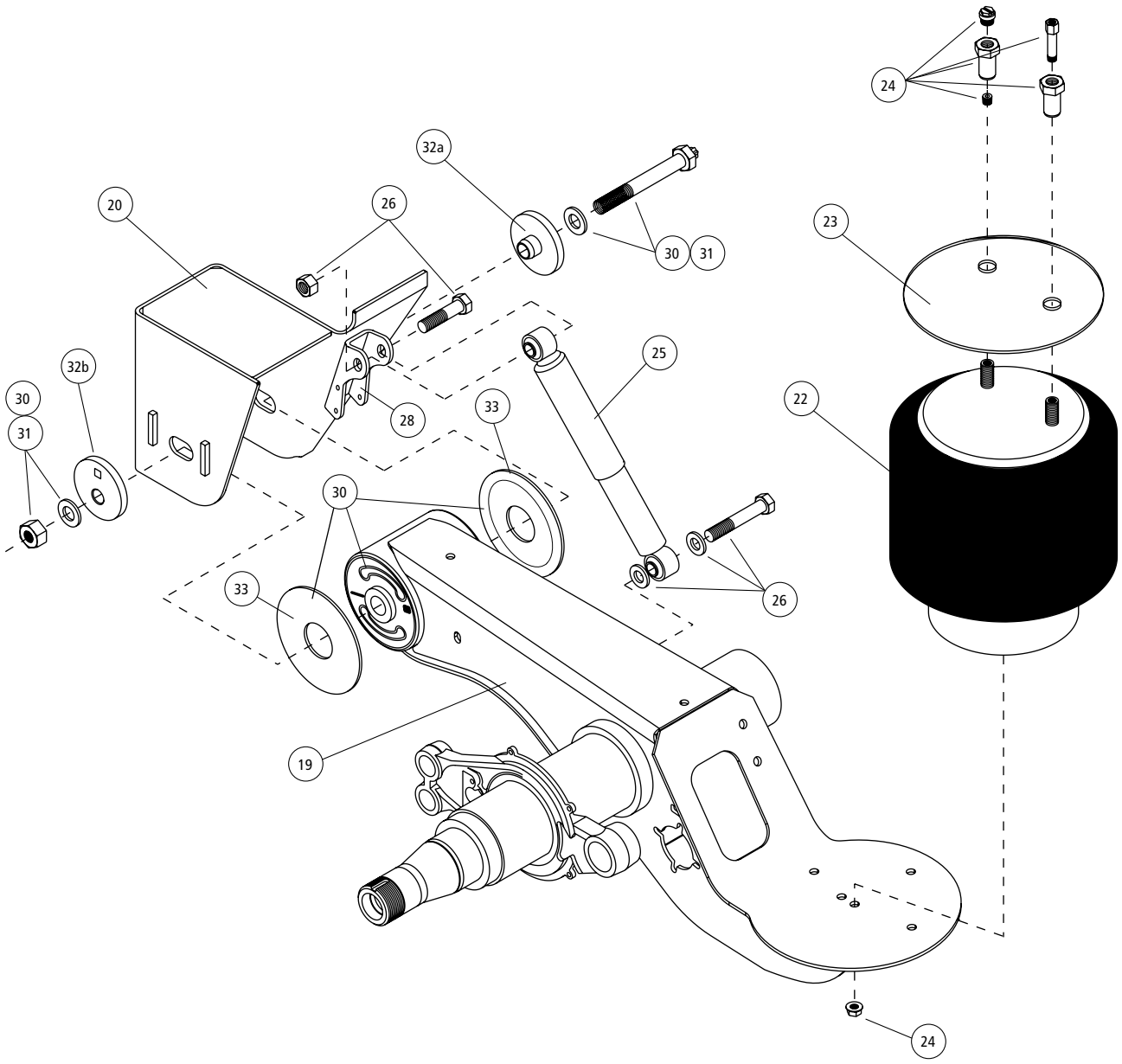

LOW-RIDE SUSPENSION ASSEMBLY — AAZL

All low-ride suspensions are wide frame bracket and wide beam assemblies.
All suspensions are 23K capacity; system capacity for tandem is 46K.
Low-ride ride heights are 6.5" - 12".

ITEM	DESCRIPTION	PART NO.	QTY. PER AXLE	NOTE
19	**AXLE/BEAM WELDMENT**	HTRAAX. XXX		Contact Hendrickson for assistance
20	**FRAME BRACKET**			See L1266 Frame Bracket Parts List
21	**FRAME BRACKET GUSSET** (Not Shown)	S-27330	2	For weld-on, winged or wingless frame attachments; for ride heights of 12" to 17"
22	**AIR SPRING**			
	Standard	S-23720	2	6.5" - 7.5" ride height
		S-23613	2	8" - 9" ride height
		S-23614	2	12" ride height
	Low Pressure	S-23721	2	6.5" - 7.5" ride height
		S-23611	2	8" - 9" ride height
		S-23612	2	12" ride height
23	**AIR SPRING MOUNTING PLATE**	S-23294	2	
24	**AIR SPRING MOUNTING KIT**	S-22619/2	2	(1) kit is required per air spring
25	**SHOCK ABSORBER**			
	Standard Travel	S-23651	2	6.5" - 9" ride height
		S-23566	2	12" ride height
	Extended Service with High Damping	S-24579	2	6.5" - 9" ride height
		S-24023	2	12" ride height
26	**FRONT SHOCK ABSORBER BOLT KIT** (Per Shock)			
	5-inch	**LDA™**		
	S-24757/2	S-31080	2	(1) required per shock
27	**SHOCK SPACER** (Not Shown)	A-30202-1	2	LDA only
28	**SHOCK MOUNT CLEVIS**	C-20918	2	
29	**SHOCK STRAP KIT** (Not Shown)			Includes (2) straps, (2) clevis and nylon ties
	Standard Shock	C-23086-4	1	6.5" - 9" ride height; Use with S-23651 shock
		C-23086-1	1	12" ride height; Use with S-23566 shock
	Extended Service with High Damping	C-23086-8	1	6.5" - 9" ride height; Use with S-24579 shock
		C-23086-2	1	12" ride height; Use with S-24023 shock
30	**TRI-FUNCTIONAL® BUSHING KIT**[1]	S-24691	2	Includes (1) TRI-FUNCTIONAL bushing, (1) pivot bolt kit, (2) bushing tube spacers and lube packet

1. Bushing tool, S-21307 is required to properly re-bush the suspension.

CONTINUED ON PAGE 6

ITEM	DESCRIPTION	PART NO.	QTY. PER AXLE	NOTE
31	**QUIK-ALIGN® PIVOT BOLT KIT**[2]	S-24679	2	Includes 10" bolt, hexnut and (2) hardened washers
32	**ALIGNMENT COLLARS**			
	32a Concentric (Inner)	S-20924	2	Alignment hole is centered
	32b Eccentric (Outer)	S-20925	2	Alignment hole is off-center
33	**BUSHING TUBE SPACER**	S-21099	4	
34	**BRAKE KITS COMPONENTS** (Not Shown)			See L1104
35	**AXLE COMPONENTS** (Not Shown)			See L1102
36	**BRAKE CHAMBER BRACKET** (Not Shown)	S-24697	2	

2. Best installed with Hendrickson's E-20 socket S-24536 (1-inch drive sleeveless), S-25119 (1-inch drive with sleeve) or S-24303 (¾-inch drive sleeveless).

OTHER PARTS LISTS

More information can be found in the following documents

Lit. Number	Description
L1102	Slider Accessories and Axle Components Parts List
L949	RTR® READY-TO-ROLL® Parts List
L589	TRI-FUNCTIONAL® Bushing Replacement Tool
L1104	Brake Kits and Components Parts List

Non-Integrated Trailer Axles

TRLAXLE®

L1182 - Vehicle Controls 302

L878 - Tire Pressure Control System 319

L1104 - Drum Brake Components 329

L949 - READY-TO-ROLL® Wheel-End Packages
& Air Disc Brake Components 337

Tire Inflations Systems

TIREMAAX®

L878 - Tire Pressure Control System 319

Brake and Wheel-End Components

Air Disc Brake

L949 - READY-TO-ROLL® Wheel-End Packages
& Air Disc Brake Components 337

Drum Brakes

L1104 - Drum Brake Components 329

RTR® READY-TO-ROLL® Wheel-End Components

L949 - READY-TO-ROLL® Wheel-End Packages
& Air Disc Brake Components 337

Vehicle Controls / Height Control Valves

L1182 - Vehicle Controls 302

Value Added Options

QUIK-DRAW® Pneumatic Pin-Pull Mechanism

L751 - QUIK-DRAW® 371

SURELOK® Ride Height Lock Mechanism

L1055 - SURELOK® 375

UBL™ UNDER BEAM LIFT™

L757 - UBL™ Parts List 257

L727 - UBL Flyer 264

OEM-INSTALLED UBL

UBL - 001, UBL - 002, UBL - 003, UBL - 004 (Weld-on)

- INTRAAX® AAT
- INTRAAX® AAL 23/25K
- INTRAAX AAEDT 30K
- INTRAAX AANT
- HT SERIES HT230/300
- HT SERIES HT250T

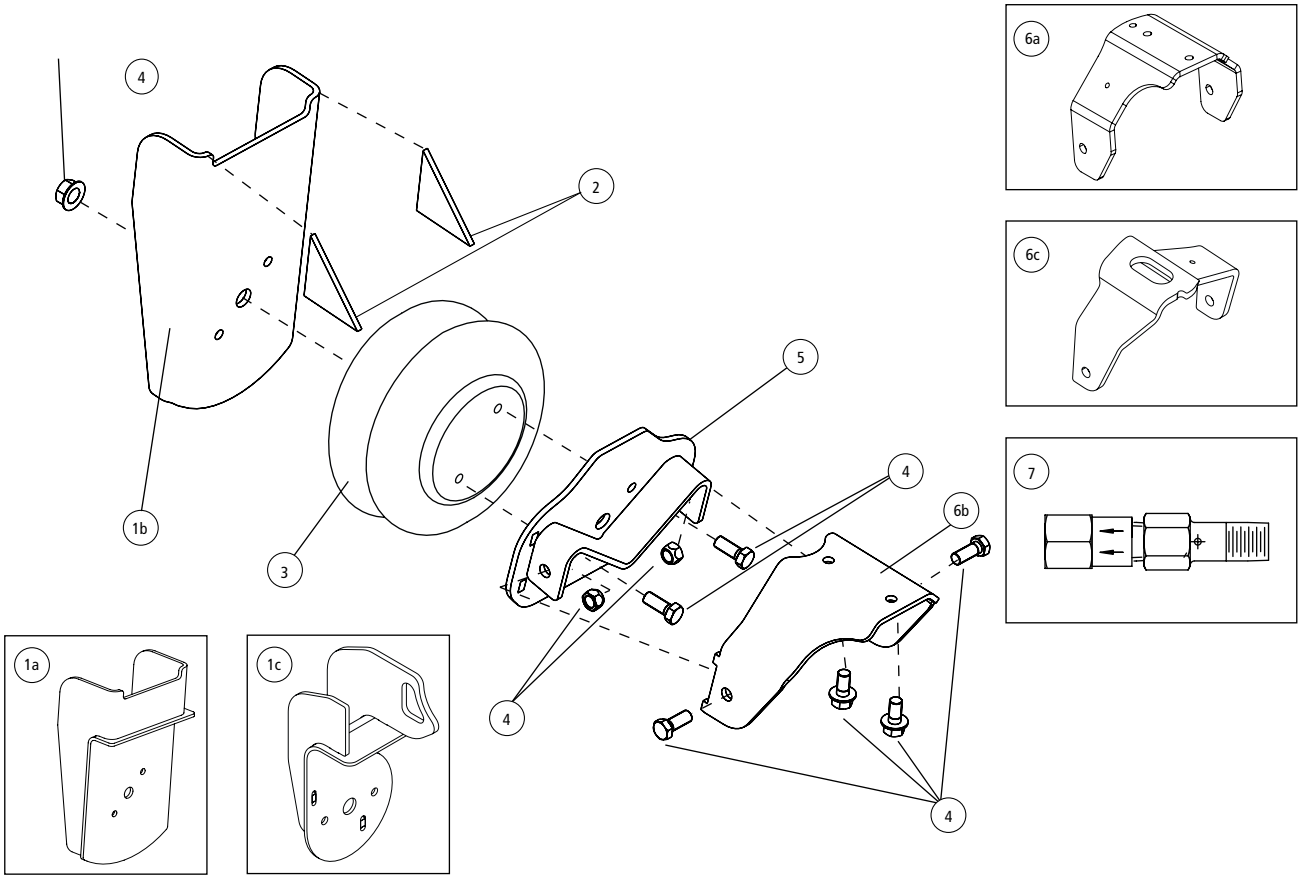

ITEM	DESCRIPTION	PART NO.	QTY.	NOTES
1	**FRAME BRACKET LIFT SUPPORT**			
	1a UBL-001	D-23301C	2	AAT, HT230 and HT300 models; Std. painted
	1b UBL-002, UBL-003	D-24658C	2	AAL, AAEDT, AAEDL and HT250T models; Std. painted
	1c UBL-004	C-28610-1C/-2C	2	AANT models only; Std. painted
2	**GUSSET**	S-2901-37	4	Not for use with UBL-004
3	**AIR SPRING**	S-23114	2	
4	**LIFT ASSEMBLY BOLT KIT**	S-24614/2	2	Includes (2) ½" bolts, (2) ⅜" bolts, (2) self-tapping screws, (2) prevailing torque hex nuts and (1) Spiralock® hex nut
5	**LIFT SPRING PLATE ASSEMBLY**			
	UBL-001, UBL-002, UBL-003	S-27945	2	All models except AANT / AANL
	UBL-004	C-28614	2	AANT models only
6	**LIFT BRACKET**			
	6a UBL-001	C-23299C	2	HT230 and HT300 models; Std. painted
	6b UBL-002, UBL-003	S-28537C	2	HT250T models only; Std. painted
	6c UBL-004	C-28617-1/-2	1	AANT models only
7	**CROSSOVER VALVE**			
	UBL-003	VS-27214	1	AAL 30K, AAEDL 30K and HT250T models only

OEM-INSTALLED UBL

UBL - 101 / 102, 201 / 202, UBL - 301 / 302 (Bolt-on)

- INTRAAX® AAL
- INTRAAX AAT
- INTRAAX AAEDT
- INTRAAX AAEDL
- VANTRAAX HKAT
- VANTRAAX HKAL
- VANTRAAX HKARL

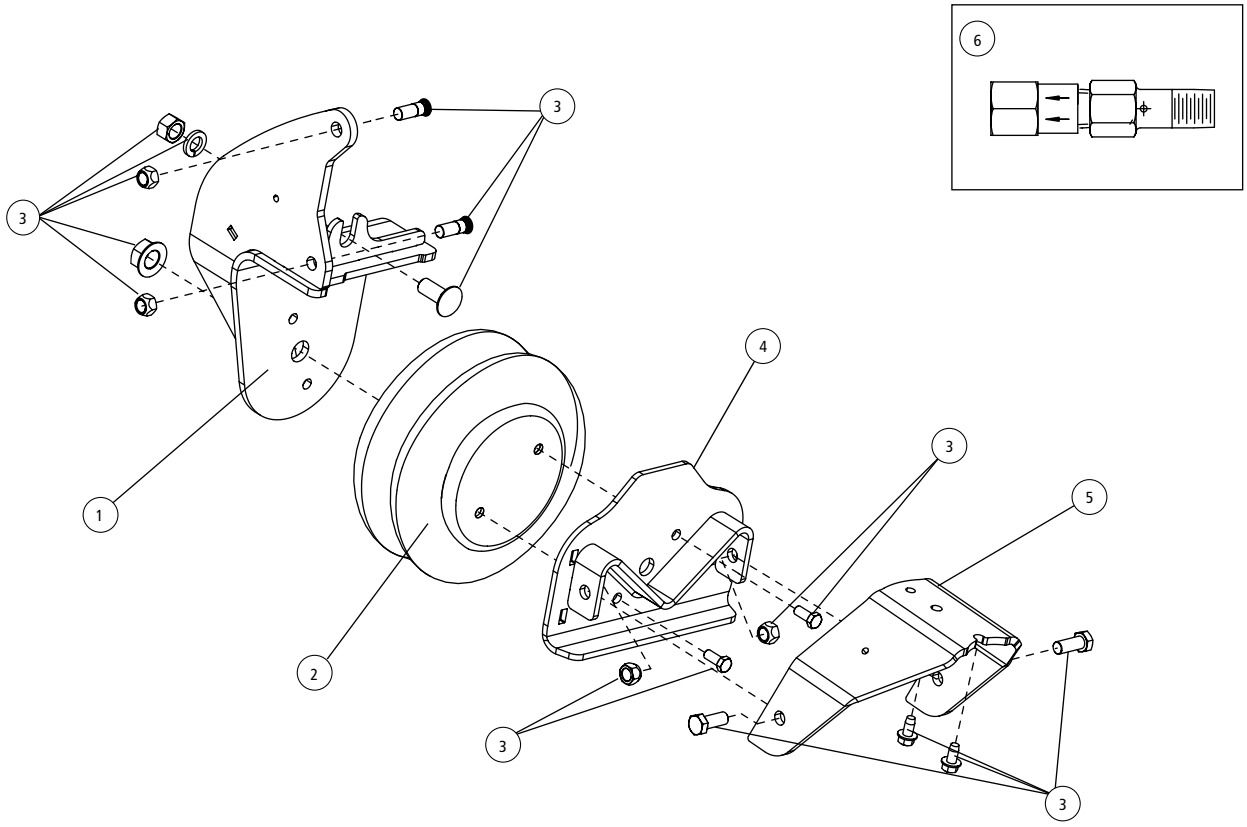

ITEM	DESCRIPTION	PART NO.	QTY.	NOTES
1	**FRAME BRACKET LIFT SUPPORT**			
	UBL-101, UBL-201, UBL-301	C-33350-1C/-2C	2	Std. painted
	UBL-102, UBL-202, UBL-302	C-33350-1GV/-2GV	2	Galvanized
2	**AIR SPRING**	S-23114	2	
3	**LIFT ASSEMBLY BOLT KIT**	S-30634-1/-2	2	Includes (2) ½" bolts, (2) ⅜" bolts, (1) carriage bolt, (2) ½" round head ribbed neck bolts, (2) self-tapping screws, (4) prevailing torque hex nuts, (1) ½" hex nut, (1) ⅝" hex nut, (1) lock washer and (1) Spiralock® hex nut
4	**LIFT SPRING PLATE ASSEMBLY**	S-27945	2	
5	**LIFT BRACKET**			
	AAT only	C-32893C	2	Std. painted
	AAL, AAEDL and AAEDT only	C-32041C	2	Std. painted
6	**CROSSOVER VALVE**			
	UBL-301, UBL-302	VS-27214	1	AAL 30K, AAEDL 30K and HT250T models only

OEM-INSTALLED UBL

UBL - 401 / 402 (Bolt-on)
- **INTRAAX® AANT 23K**
- **VANTRAAX® HKANT 69K23 (units built before Oct. 2016)**
- **VANTRAAX HKANT 46K (units built before Oct. 2016)**
- **VANTRAAX HKANT 40K (units built before Oct. 2016)**

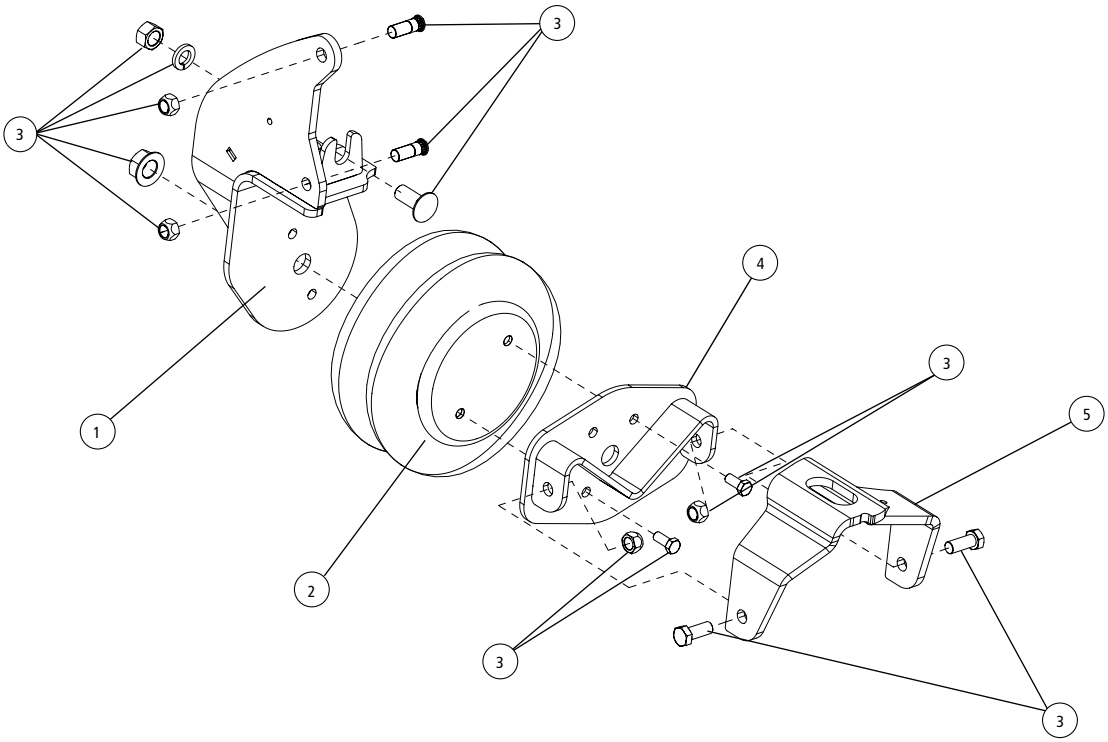

ITEM	DESCRIPTION	PART NO.	QTY.	NOTES
1	**FRAME BRACKET LIFT SUPPORT**			
	UBL-401	C-32038-1C/-2C	1	Std. painted
	UBL-402	C-32038-1GV/-2GV	1	Galvanized
2	**AIR SPRING**	S-23114	2	
3	**LIFT ASSEMBLY BOLT KIT**	S-30634-1/-2	2	Includes (2) ½" bolts, (2) ⅜" bolts, (1) carriage bolt, (2) ½" round head ribbed neck bolts, (2) self-tapping screws, (4) prevailing torque hex nuts, (1) ½" hex nut, (1) ⅝" hex nut, (1) lock washer and (1) Spiralock® hex nut
4	**LIFT SPRING PLATE ASSEMBLY**	C-28614	2	
5	**LIFT BRACKET**	C-28617-1/-2	1	

OEM-INSTALLED UBL

UBL - 005, UBL-005GV (Bolt-on)
- **INTRAAX® AANL 23K**
- **VANTRAAX® HKANL**

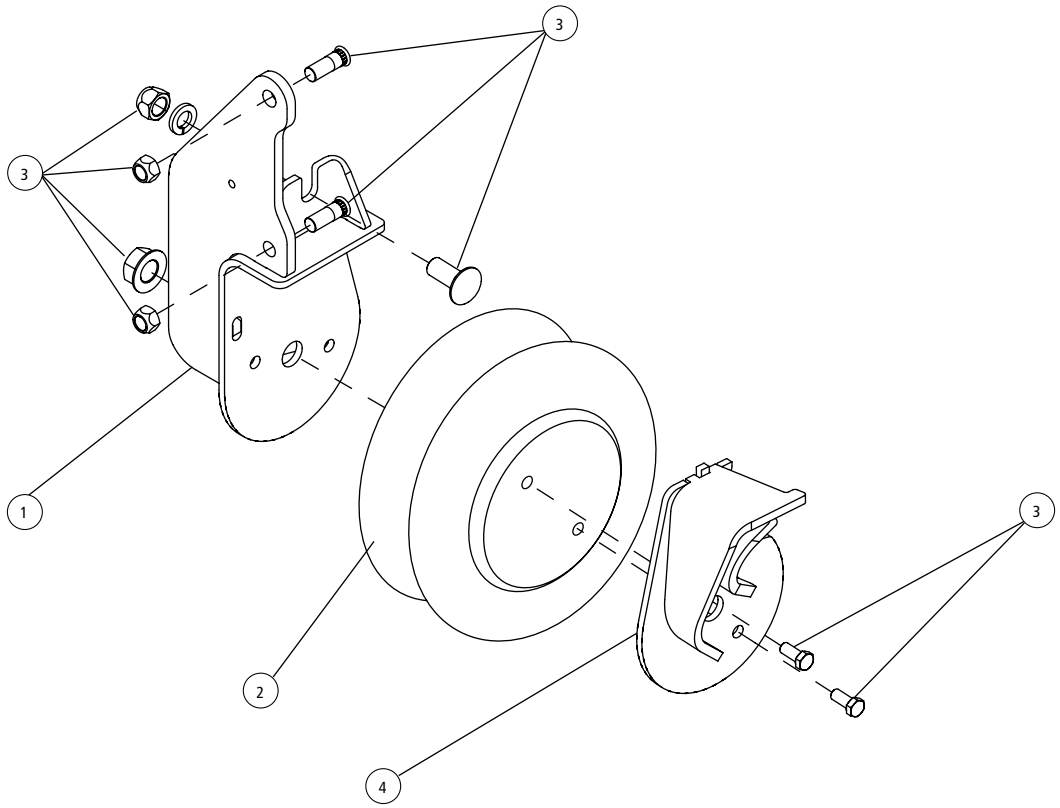

ITEM	DESCRIPTION	PART NO.	QTY.	NOTES
1	**FRAME BRACKET LIFT SUPPORT**			
	UBL-005	C-30293-1C/-2C	2	Std. painted
	UBL-005GV	C-30293-1GV/-2GV	2	Galvanized
2	**AIR SPRING**	S-23114	2	
3	**LIFT ASSEMBLY BOLT KIT**	S-30634-1/-2	2	Includes (2) ½" bolts, (2) ⅜" bolts, (1) carriage bolt, (2) ½" round head ribbed neck bolts, (2) self-tapping screws, (4) prevailing torque hex nuts, (1) ½" hex nut, (1) ⅝" hex nut, (1) lock washer and (1) Spiralock® hex nut
4	**LIFT BRACKET**	C-30209-1/-2	1	

HENDRICKSON-INSTALLED UBL

UBL - 601 (Bolt-on)

- VANTRAAX HKANT 69K23 (units built after Oct. 2016)
- VANTRAAX HKANT 46K (units built after Oct. 2016)
- VANTRAAX HKANT 40K (units built after Oct. 2016)

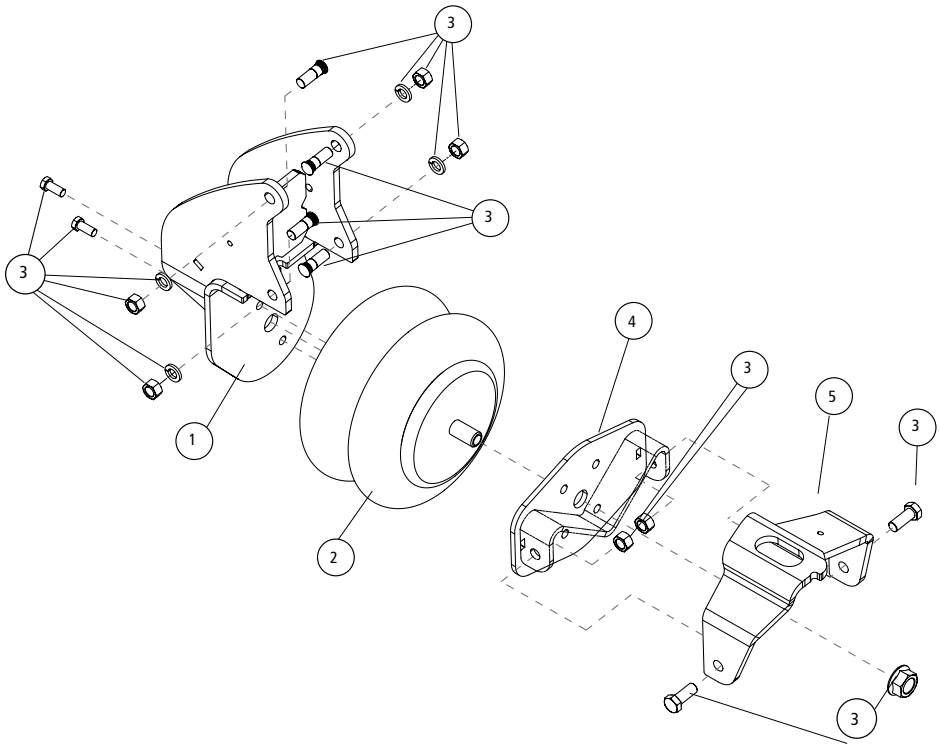

ITEM	DESCRIPTION	PART NO.	QTY	NOTE
1	FRAME BRACKET LIFT SUPPORT			
	UBL-601	C-37625-1C/-2C	1	Std. painted
	UBL-602	C-37625-1GV/-2GV	1	Galvanized
2	AIR SPRING	S-23114	2	
3	LIFT ASSEMBLY BOLT KIT	S-37955-1/-2	2	Includes (1) 3/4" hex nut, (2) hex head bolts, (4) 1/2" round head ribbed neck bolts, (2) hex cap screws, (6) 1/2" hex nuts and (4) lock washers.
4	LIFT SPRING PLATE ASSEMBLY	C-28614	2	
5	LIFT BRACKET	C-28617-1/-2	1	

HENDRICKSON-INSTALLED UBL

SUGGESTED CONTROLS BILL OF MATERIALS CHART — WABCO ABS

PART NUMBER	QUANTITY	VENDOR	DESCRIPTION	NOTES
ABS Electronic Control Unit				
400 500 105 0	1	WABCO	InfoLink ECU/Valve Assembly (2S/2M-4S/3M)	Trailer ABS ECU must be InfoLink equipped. Lift axle function must also be activated using Meritor WABCO TOOLBOX software. Reference WABCO TP-08103 Technical Bulletin for programming information.**
OR				
400 500 106 0	1	WABCO	InfoLink ECU/Valve Assembly (2S/1M)	
Lift Axle Control Components				
400 850 821 0	1	WABCO	Lift Axle Control Kit	Reference WABCO TP-08103 Technical Bulletin for installation information.
Kit includes:			463 084 050 0 Lift Axle Control Valve	
			449 518 030 0 3-meter Solenoid Valve Cable	
			449 442 010 0 Multiple Generic I/O Cable	
			449 428 030 0 12-volt Analog Input Cable	
			441 044 106 0 Pressure Sensor	
			TP-09174 Label	
Parked Auto-Deploy Components (Required by Hendrickson)				
8000	1	Sealco	Pressure Switch	The 449 428 030 0 cable included with the WABCO Lift Axle Control Option Kit allows the installation of a non-WABCO pressure switch. The pressure switch should be plumbed into the Emergency/ Supply glad hand circuit.
Service Brake Isolation Components				
780215	2	Sealco	Free Wheel Control Valve	Reference Sealco's product documentation for plumbing schematics. The pilot circuit of the free wheel control valve should be plumbed to the lift bag circuit.
Optional Components				
Multiple	1	Peterson	Light	Peterson Manufacturing stocks a wide variety of light options. Alternatively, the light can be purchased from any trailer lighting supplier.
449 711 120 0	1	WABCO	12m Light Cable	

*** Customers who currently use Meritor WABCO 2S/1M ECU/valve that is non-InfoLink equipped can remove existing ECU and replace with a new InfoLink 2S/1M ECU only (part number S446 108 206 0). For all other non-2S/1M systems, the ECU and Valve assembly must be replaced.*

HENDRICKSON-INSTALLED UBL

SUGGESTED CONTROLS BILL OF MATERIALS CHART — BENDIX ABS

OEM PART NUMBER	AFTERMARKET PART NUMBER	QUANTITY	VENDOR	DESCRIPTION	NOTES
TABS-6 Advanced					
K102325	K102326		Bendix	TABS-6 advanced Pigtail Harness	9" Power pigtail with 9" auxiliary 6-pin pigtail (all 6 pins included) with 9" 4-pin J1939 diagnostic connector
K099802	K099803	1	Bendix	Lift Axle Harness with Park Brake Override via Lift Lower (LL) Feature	6-pin DTM auxiliary connector to Lift Axle Control (LAC) solenoid 8 ft. with 2-pin AMP connector; Lift Lower (LL) override pigtail 5 ft with 2 pin DT connector
Lift Axle Service Brake Override					
109001	65476	1	Bendix	Relay Valve R12-P	Pivot relay valve; tank mounted
109424	65476	1	Bendix	Relay Valve R12-P	Pivot relay valve; bracket mounted (optional)
101450	101450N	1	Bendix	TR-3 Inversion Valve	
Park Brake Disable					
K101876	K101877	1	Bendix	Pressure Switch	Normally closed 60 PSI cut in; 40 PSI cut out
Hendrickson Lift Axle					
AKAD0012		1	Hendrickson	Lift Valve	
Label					
K101839	K101840	1	Bendix	Warning Label	Warning vehicle equipped with automatic lift axle control

- Operational flexibility
- Improved maneuverability
- Maximized payloads

Lift Your Bottom Line

Hendrickson's UBL™ UNDER BEAM LIFT™ kits allow fleets and owner-operators to put the advantages of INTRAAX®, VANTRAAX® and HT® Series to work in liftable applications. Liftable axles offer operational flexibility, help extend tire life, improve trailer maneuverability, carry more payload and save on road tolls. When combined with INTRAAX, UBL provides an efficient, lightweight integrated lift system.

Easy Assembly

Select INTRAAX models feature a self-locating, bolt-on frame bracket mount that eases installation by eliminating tedious positioning and labor intensive welding. It is also compatible with corrosion protective frame bracket coating options, allowing you to specify galvanized coating if needed.

To learn more about UBL, call 866.743.3247 or visit www.hendrickson-intl.com

HENDRICKSON®
The World Rides On Us®

UBL™ UNDER BEAM LIFT™ Features and Benefits

- **Lightweight**
  At less than 75 pounds, the UBL is lighter than other lift mechanisms on the market
- **Compact**
  The small package attaches easily to existing hangers and leaves plenty of room for auxiliary equipment
- **Durable**
  Manufactured with the same rugged craftsmanship that has made our suspensions the industry standard
- **User-friendly**
  Simple to install and operate and easy to retrofit on INTRAAX® and HT® Series models
- **Low maintenance**
  With fewer moving parts than other lift products, UBL helps deliver years of trouble-free service

Running Mode

Raised Mode

Specifications

Product Family	Suspension	UBL Kit	Attachment*		Coating		Comments
			Weld-On	Bolt-On	Painted	Galvanized**	
INTRAAX®	AAT 23/25/30K	UBL-001	X		X		Recommended for lifting in unloaded conditions only
		UBL-101		X	X		
		UBL-102		X		X	
	AAL 23/25K AAEDT 30K	UBL-002	X		X		Approved for lifting in loaded and unloaded condition
		UBL-201		X	X		
		UBL-202		X		X	
	AAL 30K AAEDL 30K	UBL-003	X		X		Approved for lifting in loaded and unloaded condition; includes crossover valve
		UBL-301		X	X		
		UBL-302		X		X	
	AANT	UBL-004	X		X		Recommended for lifting in unloaded conditions only
		UBL-401		X	X		
		UBL-402		X		X	
	AANL	UBL-005		X	X		Approved for lifting in loaded and unloaded condition
		UBL-005GV		X		X	
HT® Series	HT230/300	UBL-001	X		X		Recommended for lifting in unloaded conditions only
	HT250T	UBL-002	X		X		Approved for lifting in loaded and unloaded condition
		UBL-003	X		X		Approved for lifting in loaded and unloaded condition; includes crossover valve
VANTRAAX®	HKANL	UBL-005		X	X		
	HKAT	UBL-101		X	X		
	HKAL	UBL-201		X	X		
	HKARL	UBL-201		X	X		
	HKANT (units built before Oct. 2016)	UBL-401		X	X		
	HKANT (units built after Oct. 2016)	UBL-601		X	X		Drill to retrofit. Used on sliders only.
		UBL-602		X		X	

Suspension & Slider Components

Slider Accessories

L1102 - Slider Accessories 385

Frame Brackets

L1266 - Frame Brackets Parts List 275

Shocks

L1287 - Shocks 294

Suspension Ordering Guides
(Printable)

L1251 - CONNEX® ST

L1259 - PAN17

L1270 - Chassis Axles

L1274 - CONNEX

L544 - VANTRAAX®

L1226 - ULTRAA-K®

L555 - HT®

L602 - INTRAAX®

L802 - INTRAAX SP

L868 - TIREMAAX®

L964 - Trailer Axles

Suspension Ordering Guides
(Fill-in Interactive Form)

E1251 - CONNEX® ST

E1259 - PAN17

E1270 - Chassis Axles

E1274 - CONNEX

E544 - VANTRAAX®

E1226 - ULTRAA-K®

E555 - HT®

E602 - INTRAAX®

E802 - INTRAAX SP

E868 - TIREMAAX®

E964 - Trailer Axles

Service Tools

L1287 - Application Guide 269
L589 - Bushings 272

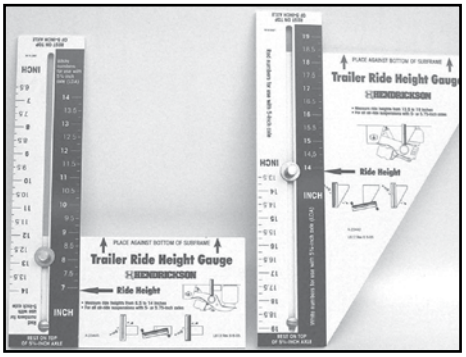

RIDE HEIGHT GAUGE
Part No. A-23442
Used to measure ride heights from 13.5" to 19" on any Hendrickson top-mount suspension with 5" or LDA™ Large Diameter Axle.

Part No. A-23445
Used to measure ride heights from 6.5" to 14" on any Hendrickson low-ride suspension with 5" or LDA Large Diameter Axle.

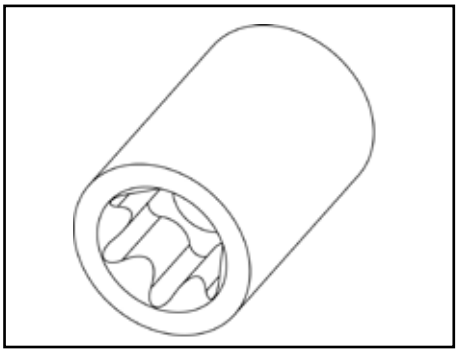

E-20 SOCKET
Part No. **S-24303** (3/4" drive)
S-24536 (1" drive)
S-25119 (1" drive with sleeve)

Used for the QUIK-ALIGN® pivot connection to install the shear-type bolt through the collars.

Used to install the lower shock mount on INTRAAX®, VANTRAAX® and HT® SERIES HT250US models.

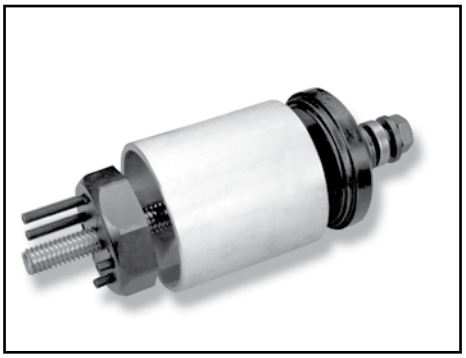

TRI-FUNCTIONAL® BUSHING TOOL
Part No. **S-21307** (TRI-FUNCTIONAL Bushing I & II – 6.75" wide)
S-24736 (TRI-FUNCTIONAL Bushing III – 3.625" wide)

Used to remove and replace TRI-FUNCTIONAL Bushings.

TRI-FUNCTIONAL® BUSHING TOOL LUBE
Part No. **S-21337** (extreme pressure lube)

Used on hex-head bolt, thrust bearing and thrust washers of the TRI-FUNCTIONAL Bushing Tool.

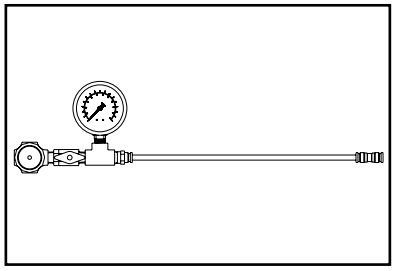

TIREMAAX® EC PRESSURE TESTER
Part No. **VS-28707**

Provides a continuous regulated source of pressure to the system to check air fittings for leaks.

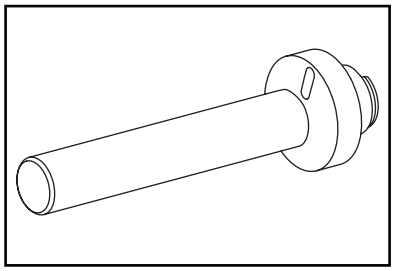

TIREMAAX PLUG DRIVER
Part No. **S-28146-1** (HN, 1.75" driver)
S-28146-2 (HP, 2.50" driver)
S-28146-3 (HP and HUS/P90, 2.75" driver)
S-27399 (driver handle)

Used to insert spindle plugs to the proper depth.

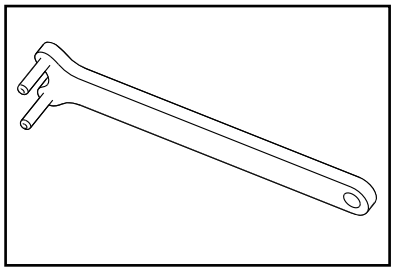

TIREMAAX SPANNER WRENCH
Part No. **S-29430**

Holds rotary union stationary while tightening threaded axle hose.

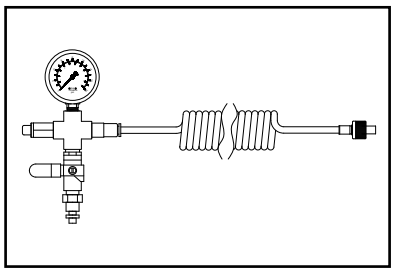

TIREMAAX PRO TARGET GAUGE
Part No. **VS-32331**

Provides a convenient way to check the controller delivery pressure without disconnecting any of the delivery line fittings. The flexible tube stretches to allow the gauge to be visible from the controller location while adjusting target pressure.

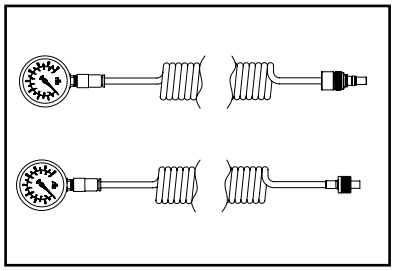

TIREMAAX CP TARGET GAUGE
Part No. **VS-32344** (CP with Hubcap-Mounted Rotary Union)
VS-30468 (CP with Spindle-Mounted Rotary Union)

Provides a convenient way to check the controller delivery pressure without disconnecting any of the delivery line fittings. The flexible tube stretches to allow the gauge to be visible from the controller location while adjusting target pressure.

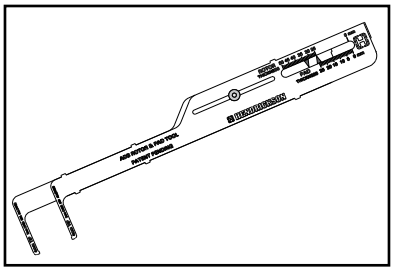

AIR DISC BRAKE WEAR TOOL
Part No. **S-37430**

Used to measure rotor and pad thickness on all air disc brake systems.

AIR DISC BRAKE ADJUSTER TOOL
Part No. **S-32676-5**

Used for air disc brake maintenance of WABCO PAN22 and Hendrickson MAXX22T™ systems.

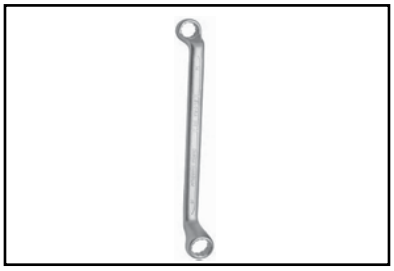

AIR DISC BRAKE ADJUSTER TOOL
Part No. **S-38378**

Used for air disc brake maintenance of WABCO PAN22 and Hendrickson MAXX22T systems.

HENDRICKSON MAXX22T TOOL
Part No. **S-35303-6**

Used to remove and install brake components for Hendrickson MAXX22T systems.

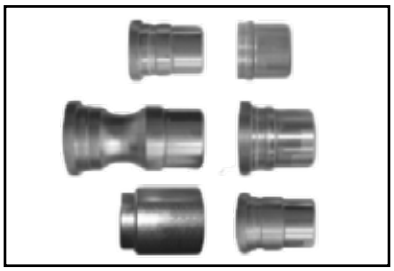

WABCO PAN22 TOOL
Part No. **S-32676-6**

Used to remove and install brake components for WABCO PAN22 air disc brake systems.

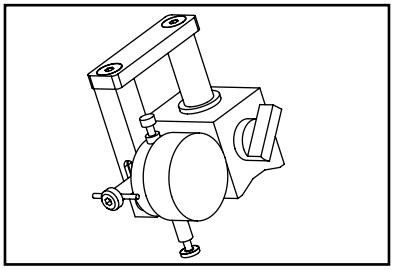

END PLAY GAUGE
Part No. **S-36710-1** (HN)
S-36710-2 (HP)
S-36710-3 (HN & HP)
S-36706 (digital indicator)

Used to measure end play for all wheel-end systems.

BUSHING TOOLS

ITEM	DESCRIPTION	QTY.	WIDE BUSHING TOOL PART NUMBER	NARROW BUSHING TOOL PART NUMBER
1	**COMPLETE BUSHING TOOL** (Individual Components Shown)	1	S-21307	S-24736
2	**HEX HEAD BOLT**			
	ACME threads — 14"	1	N/A	S-24215
	ACME threads — 18"	1	S-21308	N/A
3	**WASHERS**	7	SA-1500-15	SA-1500-15
4	**THRUST BEARING**	1	S-21315	S-21315
5	**FRONT PLATE**	1	S-21312	S-26986
6	**TRANSITION TUBE**	1	S-21313	S-24216
7	**CUP (Not Shown)**	1	S-21310	N/A
8	**REMOVAL SPACER**	1	S-21314	S-21314
9	**REAR DRIVE PLATE**	1	S-21309	S-26985
10	**CUP POINT SET SCREW**			
	4" screw for removal	2	SA-2800-4	N/A
	2" screw for installation	2	SA-2800-7	N/A
11	**LINER**	1	N/A	S-2068-4
12	**EXTREME PRESSURE LUBE** (Not Shown)	1	S-21337	S-21337

Narrow Bushing Tool

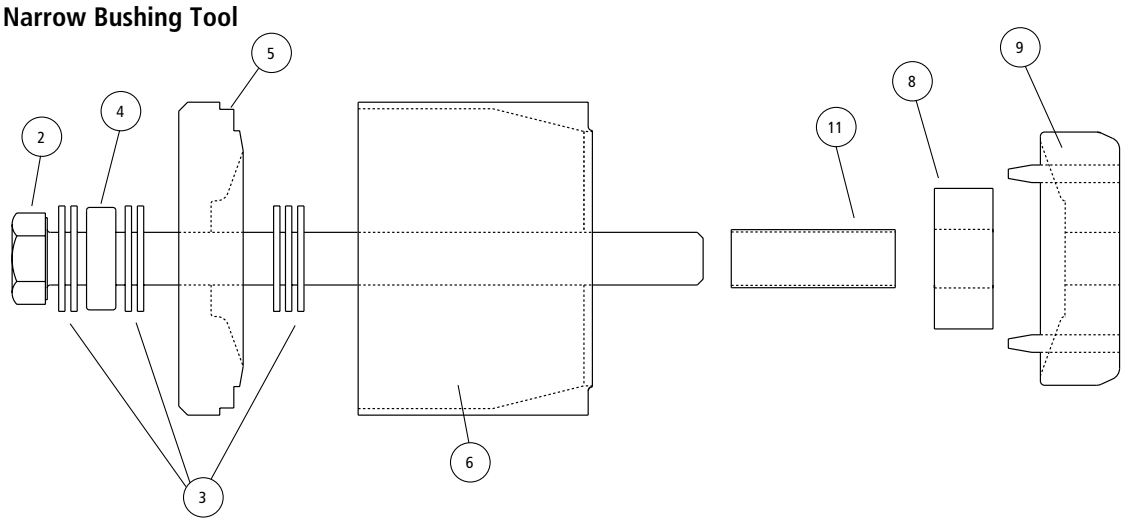

Wide Bushing Tool

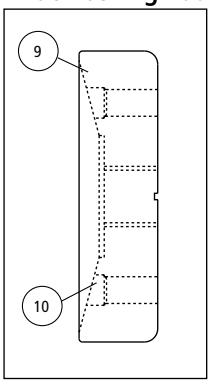

NOTES

Repeated Documents

L1266 - Frame Brackets 275

L1287 - Shocks 294

L1182 - Vehicle Controls 302

L878 - Tire Pressure Control System 319

L1104 - Drum Brake Components 329

L949 - READY-TO-ROLL® Wheel-End Packages
& Air Disc Brake Components 337

L751 - QUIK-DRAW® 371

L1055 - SURELOK® 375

L1102 - Slider Accessories 384

INTRAAX® AANT 23K

1. WELD-ON FRAME BRACKETS

RIDE HEIGHT (INCHES)	DESCRIPTION	PART NUMBER	
		ROADSIDE	CURBSIDE
12.0	Standard, winged, steel	S-27067-4L	S-27067-4R
	Tapered, winged, steel	S-26105-1L	S-26105-1R
	Standard, wingless, steel	S-27320-16L	S-27320-16R
	Tapered, wingless, steel	S-26104-1L	S-26104-1R
	Standard, winged, stainless steel	S-36535-1L	S-36535-1R
13.5 14.0 15.0	Standard, winged, steel	S-27067-4L	S-27067-4R
	Tapered, winged, steel	S-26105-1L	S-26105-1R
	Tapered, winged, steel, flush mount	S-26119-1L	S-26119-1R
	Standard, winged, steel, flush mount	S-27320-10L	S-27320-10R
	Standard, winged, steel, flush side mount	S-27320-22L	S-27320-22R
	Standard, wingless, steel	S-27320-16L	S-27320-16R
	Tapered, wingless, steel	S-26104-1L	S-26104-1R
	Standard, winged, stainless steel	S-36535-1L	S-36535-1R
13.5 14.0 15.0 HIGH CONTROL	Standard, winged, steel	S-27067-5L	S-27067-5R
	Tapered, winged, steel	S-26105-2L	S-26105-2R
	Standard, winged, steel, flush mount	S-27320-11L	S-27320-11R
	Standard, winged, steel, flush side mount	S-27320-23L	S-27320-23R
	Standard, wingless, steel	S-27320-17L	S-27320-17R
	Tapered, wingless, steel	S-26104-2L	S-26104-2R
	Standard, winged, stainless steel	S-36535-2L	S-36535-2R
16.0 17.0	Standard, winged, steel	S-27067-5L	S-27067-5R
	Tapered, winged, steel	S-26105-2L	S-26105-2R
	Tapered, winged, steel, flush mount	S-26119-2L	S-26119-2R
	Standard, winged, steel, flush mount	S-27320-11L	S-27320-11R
	Standard, winged, steel, flush side mount	S-27320-23L	S-27320-23R
	Standard, wingless, steel	S-27320-17L	S-27320-17R
	Tapered, wingless, steel	S-26104-2L	S-26104-2R
	Standard, winged, stainless steel	S-36535-2L	S-36535-2R
16.0 17.0 HIGH CONTROL	Standard, winged, steel	S-27067-6L	S-27067-6R
	Tapered, winged, steel	S-26105-3L	S-26105-3R
	Standard, winged, steel, flush mount	S-27320-12L	S-27320-12R
	Standard, winged, steel, flush side mount	S-27320-24L	S-27320-24R
	Standard, wingless, steel	S-27320-18L	S-27320-18R
	Tapered, wingless, steel	S-26104-3L	S-26104-3R
18.0 19.0	Standard, winged, steel	S-27067-6L	S-27067-6R
	Tapered, winged, steel	S-26105-3L	S-26105-3R
	Standard, winged, steel, flush mount	S-27320-12L	S-27320-12R
	Standard, winged, steel, flush side mount	S-27320-24L	S-27320-24R
	Standard, wingless, steel	S-27320-18L	S-27320-18R
	Tapered, wingless, steel	S-26104-3L	S-26104-3R

2. BOLT-ON FRAME BRACKETS

RIDE HEIGHT (INCHES)	PATTERN TYPE	UNIVERSAL BOLT-ON[1]	
		ROADSIDE	CURBSIDE
13.5 14.0 15.0	Standard - 1/2"	S-36562-1L	S-36562-1R
	Pattern 1 - 1/2"		
	Pattern 2 - 1/2"		
	Pattern 3 - 1/2"		
	Standard - 5/8"	S-36562-2L	S-36562-2R
	Pattern 1 - 5/8"		
	Pattern 2 - 5/8"		
	Pattern 3 - 5/8"		
13.5 14.0 15.0 HIGH CONTROL	Standard - 1/2"	S-36562-3L	S-36562-3R
	Pattern 1 - 1/2"		
	Pattern 2 - 1/2"		
	Pattern 3 - 1/2"		
	Standard - 5/8"	S-36562-4L	S-36562-4R
	Pattern 1 - 5/8"		
	Pattern 2 - 5/8"		
	Pattern 3 - 5/8"		
16.0 17.0	Standard - 1/2"	S-36562-3L	S-36562-3R
	Pattern 1 - 1/2"		
	Pattern 2 - 1/2"		
	Pattern 3 - 1/2"		
	Standard - 5/8"	S-36562-4L	S-36562-4R
	Pattern 1 - 5/8"		
	Pattern 2 - 5/8"		
	Pattern 3 - 5/8"		
16.0 17.0 HIGH CONTROL	Standard - 1/2"	S-36562-5L	S-36562-5R
	Pattern 1 - 1/2"		
	Pattern 2 - 1/2"		
	Pattern 3 - 1/2"		
	Standard - 5/8"	S-36562-6L	S-36562-6R
	Pattern 1 - 5/8"		
	Pattern 2 - 5/8"		
	Pattern 3 - 5/8"		
18.0 19.0	Standard - 1/2"	S-36562-5L	S-36562-5R
	Pattern 1 - 1/2"		
	Pattern 2 - 1/2"		
	Pattern 3 - 1/2"		
	Standard - 5/8"	S-36562-6L	S-36562-6R
	Pattern 1 - 5/8"		
	Pattern 2 - 5/8"		
	Pattern 3 - 5/8"		

1. As of May 2016, frame bracket mounting patterns 1, 2, 3 and standard have been replaced with the universal bolt-on frame bracket. Please refer to page 19 for additional information about the frame bracket pattern types.

INTRAAX® AAT 23K / 25K / 30K

1. WELD-ON FRAME BRACKETS

RIDE HEIGHT (INCHES)	DESCRIPTION	PART NUMBER	
		ROADSIDE	CURBSIDE
13.5 14.0 15.0	Standard, winged, steel	S-21028-1	S-21028-2
	Standard, winged, steel, weld-on top plate	S-21028-3	S-21028-4
	Standard, wingless, steel	S-21905-1	S-21905-2
	Standard, wingless, steel, extended	S-23000-1	S-23000-2
	Standard, winged, stainless steel	S-36680-1L	S-36680-1R
13.5 14.0 15.0 HIGH CONTROL	Standard, winged, steel	S-21626-1	S-21626-2
	Standard, wingless, steel	S-23000-1	S-23000-2
	Standard, winged, stainless steel	S-36680-3L	S-36680-3R
16.0 17.0	Standard, winged, steel	S-21082-1	S-21082-2
	Standard, winged, steel, weld-on top plate	S-21082-3	S-21082-4
	Standard, wingless, steel	S-21906-1	S-21906-2
	Standard, winged, stainless steel	S-36680-2L	S-36680-2R
16.0 17.0 HIGH CONTROL	Standard, winged, steel	S-22872-1	S-22872-2
	Standard, wingless, steel	S-24851-1	S-24851-2
18.0 19.0	Standard, winged, steel	S-21083-1	S-21083-2
	Standard, wingless, steel	S-22770-1	S-22770-2

2. BOLT-ON FRAME BRACKETS

RIDE HEIGHT (INCHES)	PATTERN TYPE	UNIVERSAL BOLT-ON[1]	
		ROADSIDE	CURBSIDE
13.5 14.0 15.0	Standard - 1/2"	S-36566-1L	S-36566-1R
	Standard - 5/8"	S-36566-2L	S-36566-2R
	Pattern 1 - 5/8"		
	Pattern 3 - 5/8"		
13.5 14.0 15.0 HIGH CONTROL	Standard - 1/2"	S-36566-5L	S-36566-5R
	Standard - 5/8"	S-36566-6L	S-36566-6R
16.0 17.0	Standard - 1/2"	S-36566-3L	S-36566-3R
	Standard - 5/8"	S-36566-4L	S-36566-4R
	Pattern 1 - 5/8"		
	Pattern 3 - 5/8"		
16.0 17.0 HIGH CONTROL	Standard - 1/2"	S-36567-1L	S-36567-1R
	Standard - 5/8"	S-36567-2L	S-36567-2R
18.0 19.0	Standard - 1/2"	S-36567-3L	S-36567-3R
	Standard - 5/8"	S-36567-4L	S-36567-4R

1. As of May 2016, frame bracket mounting patterns 1, 2, 3 and standard have been replaced with the universal bolt-on frame bracket. Please refer to page 19 for additional information about the frame bracket pattern types.

NOTE: All part numbers listed are coated with black primer. Other options may exist. Please contact Hendrickson for assistance.

INTRAAX® AAEDT 30K

1. WELD-ON FRAME BRACKETS

RIDE HEIGHT (INCHES)	DESCRIPTION	PART NUMBER	
		ROADSIDE	CURBSIDE
14.0	Standard, winged, steel	S-24766-3L	S-24766-3R
	Standard, wingless, steel	S-24767-3L	S-24767-3R
15.0	Standard, winged, steel	S-24766-4L	S-24766-4R
	Standard, wingless, steel	S-24767-4L	S-24767-4R
16.0 17.0	Standard, winged, steel	S-24766-5L	S-24766-5R

2. BOLT-ON FRAME BRACKETS

RIDE HEIGHT (INCHES)	PATTERN TYPE	UNIVERSAL BOLT-ON[1]	
		ROADSIDE	CURBSIDE
14.0	Standard - 1/2"	S-36564-3L	S-36564-3R
	Standard - 5/8"	S-36564-4L	S-36564-4R
	Pattern 1 - 5/8"		
	Pattern 3 - 5/8"		
15.0	Standard - 1/2"	S-36565-1L	S-36565-1R
	Standard - 5/8"	S-36565-2L	S-36565-2R
	Pattern 3 - 5/8"		
16.0 17.0	Standard - 1/2"	S-36565-3L	S-36565-3R
	Standard - 5/8"	S-36565-4L	S-36565-4R
	Pattern 3 - 5/8"		

INTRAAX AANLS 20K

1. WELD-ON FRAME BRACKETS

RIDE HEIGHT (INCHES)	DESCRIPTION	PART NUMBER	
		ROADSIDE	CURBSIDE
6.25 7.0	Standard, winged, steel	S-26150-1L	S-26150-1R
	Standard, winged, steel, flush mount	S-26874-1L	S-26874-1R
9.0	Standard, winged, steel	S-26150-2L	S-26150-2R
	Standard, winged, steel, flush mount	S-26874-2L	S-26874-2R
12.0	Standard, winged, steel	S-27067-5L	S-27067-5R
	Standard, winged, stainless steel	S-36535-2L	S-36535-2R

1. As of May 2016, frame bracket mounting patterns 1, 2, 3 and standard have been replaced with the universal bolt-on frame bracket. Please refer to page 19 for additional information about the frame bracket pattern types.

NOTE: All part numbers listed are coated with black primer. Other options may exist. Please contact Hendrickson for assistance.

INTRAAX® AANL 23K

1. WELD-ON FRAME BRACKETS			
RIDE HEIGHT (INCHES)	DESCRIPTION	PART NUMBER	
		ROADSIDE	CURBSIDE
6.5 7.5	Standard, winged, steel	S-29184-1L	S-29184-1R
	Standard, winged, steel, chamfered	S-29183-1L	S-29183-1R
	Standard, winged, steel, flush mount	S-29198-1L	S-29198-1R
	Standard, wingless, steel	S-29198-3L	S-29198-3R
8.0 9.0	Standard, winged, steel	S-29184-2L	S-29184-2R
	Standard, winged, steel, chamfered	S-29183-2L	S-29183-2R
	Standard, winged, steel, flush mount	S-29198-2L	S-29198-2R
	Standard, wingless, steel	S-29198-4L	S-29198-4R
12.0	Standard, winged, steel	S-27067-4L	S-27067-4R
	Tapered, winged, steel	S-26105-1L	S-26105-1R
	Tapered, winged, steel, flush mount	S-26119-1L	S-26119-1R
	Standard, winged, steel, flush mount	S-27320-10L	S-27320-10R
	Standard, winged, steel, flush side mount	S-27320-22L	S-27320-22R
	Standard, wingless, steel	S-27320-16L	S-27320-16R
	Tapered, wingless, steel	S-26104-1L	S-26104-1R
	Standard, winged, stainless steel	S-36535-1L	S-36535-1R
14.0 15.0	Standard, winged, steel	S-27067-5L	S-27067-5R
	Tapered, winged, steel	S-26105-2L	S-26105-2R
	Tapered, winged, steel, flush mount	S-26119-2L	S-26119-2R
	Standard, winged, steel, flush mount	S-27320-11L	S-27320-11R
	Standard, winged, steel, flush side mount	S-27320-23L	S-27320-23R
	Standard, wingless, steel	S-27320-17L	S-27320-17R
	Tapered, wingless, steel	S-26104-2L	S-26104-2R
	Standard, winged, stainless steel	S-36535-2L	S-36535-2R
16.0 17.0	Standard, winged, steel	S-27067-6L	S-27067-6R
	Tapered, winged, steel	S-26105-3L	S-26105-3R
	Standard, winged, steel, flush mount	S-27320-12L	S-27320-12R
	Standard, winged, steel, flush side mount	S-27320-24L	S-27320-24R
	Standard, wingless, steel	S-27320-18L	S-27320-18R
	Tapered, wingless, steel	S-26104-3L	S-26104-3R
	Standard, winged, stainless steel	S-36535-3L	S-36535-3R

NOTE: All part numbers listed are coated with black primer. Other options may exist. Please contact Hendrickson for assistance.

2. BOLT-ON FRAME BRACKETS

RIDE HEIGHT (INCHES)	PATTERN TYPE	UNIVERSAL BOLT-ON[1]	
		ROADSIDE	CURBSIDE
6.5 7.5	Standard - 1/2" countersunk[2]	S-36561-1L	S-36561-1R
	Standard - 5/8" countersunk[2]	S-36561-3L	S-36561-3R
	Pattern 1 - 5/8" countersunk[2]	S-36561-5L	S-36561-5R
	Pattern 3 - 5/8" countersunk[2]	S-36561-7L	S-36561-7R
8.0 9.0	Standard - 1/2" countersunk[2]	S-36561-2L	S-36561-2R
	Standard - 5/8" countersunk[2]	S-36561-4L	S-36561-4R
	Pattern 1 - 5/8" countersunk[2]	S-36561-6L	S-36561-6R
	Pattern 3 - 5/8" countersunk[2]	S-36561-8L	S-36561-8R
12.0	Standard - 1/2"	S-36562-1L	S-36562-1R
	Pattern 1 - 1/2"		
	Pattern 2 - 1/2"		
	Pattern 3 - 1/2"		
	Standard - 5/8"	S-36562-2L	S-36562-2R
	Pattern 1 - 5/8"		
	Pattern 2 - 5/8"		
	Pattern 3 - 5/8"		
14.0 15.0	Standard - 1/2"	S-36562-3L	S-36562-3R
	Pattern 1 - 1/2"		
	Pattern 2 - 1/2"		
	Pattern 3 - 1/2"		
	Standard - 5/8"	S-36562-4L	S-36562-4R
	Pattern 1 - 5/8"		
	Pattern 2 - 5/8"		
	Pattern 3 - 5/8"		
16.0 17.0	Standard - 1/2"	S-36562-5L	S-36562-5R
	Pattern 1 - 1/2"		
	Pattern 2 - 1/2"		
	Pattern 3 - 1/2"		
	Standard - 5/8"	S-36562-6L	S-36562-6R
	Pattern 1 - 5/8"		
	Pattern 2 - 5/8"		
	Pattern 3 - 5/8"		

1. As of May 2016, frame bracket mounting patterns 1, 2, 3 and standard have been replaced with the universal bolt-on frame bracket. Please refer to page 19 for additional information about the frame bracket pattern types.
2. Countersunk frame brackets require a special bolt kit, S-30476-2/2 (1/2" bolt hole center) and S-30476-1/2 (5/8" bolt hole center). One kit per frame bracket.

NOTE: All part numbers listed are coated with black primer. Other options may exist. Please contact Hendrickson for assistance.

INTRAAX® AAL 23K / 25K / 30K & AAEDL 30K

1. WELD-ON FRAME BRACKETS

RIDE HEIGHT (INCHES)	DESCRIPTION	PART NUMBER	
		ROADSIDE	CURBSIDE
6.5 7.5	Standard, winged, steel	S-25401-2L	S-25401-2R
	Standard, wingless, steel	S-24767-1L	S-24767-1R
	Standard, winged, steel, chamfered[1]	S-25947-1L	S-25947-1R
8.0 9.0	Standard, winged, steel	S-25401-1L	S-25401-1R
	Standard, wingless, steel	S-24767-7L	S-24767-7R
12.0	Standard, winged, steel	S-24766-2L	S-24766-2R
	Standard, wingless, steel	S-24767-2L	S-24767-2R
14.0 15.0	Standard, winged, steel	S-24766-3L	S-24766-3R
	Standard, wingless, steel	S-24767-3L	S-24767-3R
	Standard, winged, stainless steel	S-38186-2L	S-38186-2R
16.0 17.0	Standard, winged, steel	S-24766-4L	S-24766-4R
	Standard, wingless, steel	S-24767-4L	S-24767-4R
	Standard, winged, stainless steel	S-38186-3L	S-38186-3R
19.0	Standard, winged, steel	S-24766-5L	S-24766-5R

2. BOLT-ON FRAME BRACKETS

RIDE HEIGHT[2] (INCHES)	PATTERN TYPE	UNIVERSAL BOLT-ON[3]	
		ROADSIDE	CURBSIDE
6.5 7.5	Standard - 1/2" countersunk[4]	S-36563-5L	S-36563-5R
	Standard - 5/8" countersunk[4]	S-36563-6L	S-36563-6R
	Pattern 1 - 5/8" countersunk[4]	S-36563-7L	S-36563-7R
	Pattern 3 - 5/8" countersunk[4]	S-36563-8L	S-36563-8R
8.0 9.0	Standard - 1/2" countersunk[4]	S-36563-1L	S-36563-1R
	Standard - 5/8" countersunk[4]	S-36563-2L	S-36563-2R
	Pattern 1 - 5/8" countersunk[4]	S-36563-3L	S-36563-3R
	Pattern 3 - 5/8" countersunk[4]	S-36563-4L	S-36563-4R
12.0	Standard - 1/2"	S-36564-1L	S-36564-1R
	Standard - 5/8"	S-36564-2L	S-36564-2R
	Pattern 1 - 5/8"		
	Pattern 3 - 5/8"		
14.0 15.0	Standard - 1/2"	S-36564-3L	S-36564-3R
	Standard - 5/8"	S-36564-4L	S-36564-4R
	Pattern 1 - 5/8"		
	Pattern 3 - 5/8"		
16.0 17.0	Standard - 1/2"	S-36565-1L	S-36565-1R
	Standard - 5/8"	S-36565-2L	S-36565-2R
	Pattern 3 - 5/8"		
19.0	Standard - 1/2"	S-36565-3L	S-36565-3R
	Standard - 5/8"	S-36565-4L	S-36565-4R
	Pattern 3 - 5/8"		

1. Not available on INTRAAX AAEDL 30K models.
2. Ride Heights 6.5 & 7.5 inches not available on AAEDL 30K models.
3. As of May 2016, frame bracket mounting patterns 1, 2, 3 and standard have been replaced with the universal bolt-on frame bracket. Please refer to page 19 for additional information about the frame bracket pattern types.
4. Countersunk frame brackets require a special bolt kit, S-30476-2/2 (1/2" bolt hole center) and S-30476-1/2 (5/8" bolt hole center). One kit per frame bracket.

VANTRAAX® HKANT 23K / 40K / 46K / 69K23

1. WELD-ON FRAME BRACKETS			
RIDE HEIGHT (INCHES)	PIVOT HEIGHT (INCHES)	PART NUMBER	
		ROADSIDE	CURBSIDE
14.0	8.0	S-28531-1L	S-28531-1R
15.0 15.5 16.0 17.0 17.5	10.0	S-32194-2L	S-32194-2R
18.0 19.0	12.0	S-28531-3L	S-28531-3R

VANTRAAX HKAT 50K / 69K25 / 75K25

1. WELD-ON FRAME BRACKETS			
RIDE HEIGHT (INCHES)	PIVOT HEIGHT (INCHES)	PART NUMBER	
		ROADSIDE	CURBSIDE
13.5 14.0 15.0	8.0	D-21807-1	D-21807-2
15.5 16.0 17.0	10.0	S-32195-2L	S-32195-2R
17.5 18.0 19.0	12.0	S-32195-3L	S-32195-3R

VANTRAAX HKANT 40K / 46K / 69K23 Equipped with Hendrickson-Installed UBL™

1. WELD-ON FRAME BRACKETS			
RIDE HEIGHT (INCHES)	PIVOT HEIGHT (INCHES)	PART NUMBER	
		ROADSIDE	CURBSIDE
16.0 17.5	10	S-37787-2L	S-37787-2R

VANTRAAX HKANL 23K

1. WELD-ON FRAME BRACKETS			
RIDE HEIGHT (INCHES)	PIVOT HEIGHT (INCHES)	PART NUMBER	
		ROADSIDE	CURBSIDE
16.0 17.0	12.0	S-27067-6L	S-27067-6R

VANTRAAX HKAL 46K

1. WELD-ON FRAME BRACKETS			
RIDE HEIGHT (INCHES)	PIVOT HEIGHT (INCHES)	PART NUMBER	
		ROADSIDE	CURBSIDE
10.0	8.0	S-26067-1L	S-26067-1R
11.0	10.0	S-33173-2L	S-33173-2R

NOTE: All part numbers listed are coated with black primer. Other options may exist. Please contact Hendrickson for assistance.

VANTRAAX® HKARL 46K

1. WELD-ON FRAME BRACKETS			
RIDE HEIGHT (INCHES)	PIVOT HEIGHT (INCHES)	PART NUMBER	
		ROADSIDE	CURBSIDE
9.0 10.0	8.0	S-26067-1L	S-26067-1R
11.0 12.0	10.0	S-33173-2L	S-33173-2R

CONNEX® ST CXSL 25K

1. WELD-ON FRAME BRACKETS				
RIDE HEIGHT (INCHES)	PIVOT HEIGHT (INCHES)	DESCRIPTION	PART NUMBER	
			ROADSIDE	CURBSIDE
13.0 14.0 15.0	8.0	Winged	S-21179-1	S-21179-2
		Wingless	S-21590-1	S-21590-2
16.0 17.0	10.0	Winged	S-21165-1	S-21165-2
		Wingless	S-21592-1	S-21592-2
18.0 19.0	12.0	Winged	S-21265-1	S-21265-2
		Wingless	S-22828-3	S-22828-4

2. BOLT-ON FRAME BRACKETS					
RIDE HEIGHT (INCHES)	PIVOT HEIGHT (INCHES)	PATTERN TYPE	DESCRIPTION	UNIVERSAL BOLT-ON	
				ROADSIDE	CURBSIDE
13.0 14.0 15.0	8.0	Standard - 5/8"	Winged	S-36234-1L	S-36234-1R
16.0 17.0	10.0		Winged	S-36234-2L	S-36234-2R
18.0 19.0	12.0		Winged	S-36234-3L	S-36234-3R

CONNEX CXU 23K / 25K

1. WELD-ON FRAME BRACKETS				
RIDE HEIGHT (INCHES)	PIVOT HEIGHT (INCHES)	DESCRIPTION	PART NUMBER	
			ROADSIDE	CURBSIDE
5.5 6.5	8.0	Standard travel and wingless	S-22826-1	S-22826-2
6.5		Limited jounce and wingless	S-22826-1	S-22826-2
7.5	10.0	Limited jounce and wingless	S-22827-1	S-22827-2
7.5 9.0		Standard travel and wingless	S-22827-1	S-22827-2

2. BOLT-ON FRAME BRACKETS					
RIDE HEIGHT (INCHES)	PIVOT HEIGHT (INCHES)	PATTERN TYPE	DESCRIPTION	UNIVERSAL BOLT-ON	
				ROADSIDE	CURBSIDE
5.5 6.5	8.375	Standard - 5/8"	Standard travel and wingless	S-37505-1L	S-37505-1R
		Pattern 8 - 5/8"		S-37505-21L	S-37505-21R

NOTE: All part numbers listed are coated with black primer. Other options may exist. Please contact Hendrickson for assistance.

HT® SERIES HT190T

1. WELD-ON FRAME BRACKETS			
MODELS	DESCRIPTION	PART NUMBER	
		ROADSIDE	CURBSIDE
T-14-001 T-14-002 T-14-005 T-14-009 T-15-001 T-15-002 T-15-005 T-15-009 T-15-020	Wingless, Weld Align	S-20064-1	S-20064-2
T-16-001 T-16-002 T-16-003 T-16-005 T-16-009 T-17-001 T-17-002 T-17-005 T-17-009	Wingless, Weld Align	S-20065-1	S-20065-2
TA14-001 TA14-005 TA15-005	Winged, QUIK-ALIGN®	S-21179-1	S-21179-2
TA16-005 TA17-005	Winged, QUIK-ALIGN	S-21165-1	S-21165-2
TB14-001 TB14-005 TB14-024 TB15-001 TB15-002 TB15-005 TB15-024	Wingless, QUIK-ALIGN	S-21590-1	S-21590-2
TB16-001 TB16-005 TB17-005	Wingless, QUIK-ALIGN	S-21592-1	S-21592-2

HT SERIES HT230T

1. WELD-ON FRAME BRACKETS			
MODELS	DESCRIPTION	PART NUMBER	
		ROADSIDE	CURBSIDE
-14-008 -15-008 -15-025	Wingless, Weld Align	S-20047-1	S-20047-2
-16-008 -17-008	Wingless, Weld Align	S-20048-1	S-20048-2
-14-001 -14-004 -14-005 -14-007 -14-017 -14-020 -14-021 -14-024 -15-001 -15-003 -15-005 -15-006 -15-007 -15-009 -15-012 -15-017 -15-020 -15-026 -15-027 -15-028 -15-517	Wingless, Weld Align	S-20064-1	S-20064-2
-16-001 -16-004 -16-005 -16-006 -16-007 -16-009 -16-024 -16-026 -17-001 -17-003 -17-005 -17-006 -17-007 -17-009 -17-012 -17-017 -17-022 -17-023 -17-024 -17-026 -17-517	Wingless, Weld Align	S-20065-1	S-20065-2
-19-001 -1T9-027	Wingless, Weld Align	S-14190-1	S-14190-2
TA15-525 TA16-001 TA16-004 TA16-007 TA17-001 TA17-003 TA17-007 TA17-013 TA17-026 TA17-517 TA17-522	Winged, QUIK-ALIGN	S-21165-1	S-21165-2
TA14-001 TA14-004 TA14-007 TA14-020 TA14-021 TA14-520 TA14-601 TA14-701 TA15-001 TA15-003 TA15-007 TA15-009 TA15-012 TA15-016 TA15-018 TA15-026 TA15-517 TA15-522 TA15-523 TA15-524 TA15-601 TA15-701	Winged, QUIK-ALIGN	S-21179-1	S-21179-2

NOTE: All part numbers listed are coated with black primer. Other options may exist. Please contact Hendrickson for assistance.

HT® SERIES HT230T

1. WELD-ON FRAME BRACKETS (continued)

MODELS	DESCRIPTION	PART NUMBER	
		ROADSIDE	CURBSIDE
TA15-016	Winged, QUIK-ALIGN®	S-21179-3	S-21179-4
TA19-001	Winged, QUIK-ALIGN	S-21193-1	S-21193-2
TA14-008 TA15-008 TA15-025	Winged, QUIK-ALIGN	S-21249-1	S-21249-2
TA17-008	Winged, QUIK-ALIGN	S-21250-1	S-21250-2
TB14-001 TB14-021 TB14-022 TB14-024 TB14-701 TB15-001 TB15-003 TB15-009 TB15-020 TB15-026 TB15-027 TB15-028	Wingless, QUIK-ALIGN	S-21590-1	S-21590-2
TB14-033 TB16-001 TB16-004 TB16-024 TB16-026 TB17-001 TB17-003 TB17-009 TB17-024 TB17-026	Wingless, QUIK-ALIGN	S-21592-1	S-21592-2
TB15-025	Wingless, QUIK-ALIGN	S-22420-1	S-22420-2
TB19-001	Wingless, QUIK-ALIGN	S-23461-1	S-23461-2

2. BOLT-ON FRAME BRACKETS

MODELS	DESCRIPTION	PART NUMBER	
		ROADSIDE	CURBSIDE
-14-002 -14-011 -15-002 -15-004 -15-011 -15-032 -16-021	Wingless, Weld Align	S-20007-1	S-20007-2
-16-002 -16-010 -17-002 -17-004 -17-011 -17-032	Wingless, Weld Align	S-20008-1	S-20008-2
-19-004	Wingless, Weld Align	S-20190-1	S-20190-2
-19-002	Wingless, Weld Align	S-20396-1	S-20396-2
TA14-002 TA15-002 TA15-004	Winged, QUIK-ALIGN	S-21204-1	S-21204-2
TA16-002 TA17-002	Winged, QUIK-ALIGN	S-21205-1	S-21205-2
-18-052	Winged, Weld Align	S-21332-1	S-21332-2
TA14-070 TA15-071 TB14-070	Winged, QUIK-ALIGN	S-25812-1	S-25812-2
TA15-036	Winged, QUIK-ALIGN	S-24912-1	S-24912-2
TB14-002 TB15-002	Wingless, QUIK-ALIGN	S-22137-1	S-22137-2
TB16-002 TB17-002 TB18-002	Wingless, QUIK-ALIGN	S-22138-1	S-22138-2
TB14-071 TB15-071	Wingless, QUIK-ALIGN	S-25494-1	S-25494-2
TC14-060 TC15-060 TC15-062	Wingless, QUIK-ALIGN	S-24177-1	S-24177-2
TC16-060 TC17-060 TC18-060 TC16-062 TC17-062 TC18-062	Wingless, QUIK-ALIGN	S-24178-1	S-24178-2
TC19-060 TC19-062	Wingless, QUIK-ALIGN	S-24181-1	S-24181-2
TC14-061 TC15-061 TC15-063	Wingless, QUIK-ALIGN	S-24179-1	S-24179-2
TC16-061 TC17-061 TC18-061 TC16-063 TC17-063 TC18-063	Wingless, QUIK-ALIGN	S-24180-1	S-24180-2

NOTE: All part numbers listed are coated with black primer. Other options may exist. Please contact Hendrickson for assistance.

HT® SERIES HT250T

1. WELD-ON FRAME BRACKETS

MODELS	DESCRIPTION	PART NUMBER	
		ROADSIDE	CURBSIDE
T-12-001 T-12-003 T-12-006 T-12-020 T-14-001 T-14-003 T-14-006 T-14-021 T-15-001 T-15-006 T-15-021 T-15-022 T-15-023 T-15-026	Wingless, Weld Align	S-20064-1	S-20064-2
T-16-001 T-16-003 T-16-006 T-16-021 T-16-022 T-17-001 T-17-006 T-17-020 T-17-021 T-17-022 T-17-023 T-17-501	Wingless, Weld Align	S-20065-1	S-20065-2
T-19-001	Wingless, Weld Align	S-14190-1	S-14190-2
T-16-016	Wingless, Weld Align	S-21040-1	S-21040-2
TA19-001	Winged, QUIK-ALIGN®	S-21193-1	S-21193-2
TA12-001 TA14-001 TA14-021 TA15-001 TA15-021	Winged, QUIK-ALIGN	S-21179-1	S-21179-2
TA16-001 TA16-021 TA17-001 TA17-020 TA17-021	Winged, QUIK-ALIGN	S-21165-1	S-21165-2
TA14-016	Winged, QUIK-ALIGN	S-21179-3	S-21179-4
TB12-001 TB12-003 TB12-024 TB12-029 TB14-001 TB14-003 TB14-015 TB14-021 TB14-022 TB14-024 TB15-001 TB15-021 TB15-023 TB15-024 TB15-025 TB15-026	Wingless, QUIK-ALIGN	S-21590-1	S-21590-2
TB16-001 TB16-020 TB16-021 TB16-022 TB16-023 TB16-024 TB16-026 TB17-001 TB17-020 TB17-021 TB17-024 TB17-026 TB17-027 TB17-028	Wingless, QUIK-ALIGN	S-21592-1	S-21592-2
TB19-001	Wingless, QUIK-ALIGN	S-23461-1	S-23461-2

NOTE: All part numbers listed are coated with black primer. Other options may exist. Please contact Hendrickson for assistance.

HT® SERIES HT250T

2. BOLT-ON FRAME BRACKETS			
MODELS	DESCRIPTION	PART NUMBER	
		ROADSIDE	CURBSIDE
T-16-002 T-17-002	Wingless, Weld Align	S-20008-1	S-20008-2
T-19-002 T-19-004	Wingless, Weld Align	S-20396-1	S-20396-2
T-12-002 T-14-002 T-15-002	Wingless, Weld Align	S-20007-1	S-20007-2
T-15-025	Wingless, Weld Align	S-20047-1[5]	S-20047-2[5]
TA12-002 TA14-002 TA15-002	Winged, QUIK-ALIGN®	S-21204-1	S-21204-2
TA16-002 TA17-002	Winged, QUIK-ALIGN	S-21205-1	S-21205-2
TA14-070	Winged, QUIK-ALIGN	S-25812-1	S-25812-2
TB12-002	Wingless, QUIK-ALIGN	S-22137-1	S-22137-2
TB14-071	Wingless, QUIK-ALIGN	S-25494-1	S-25494-2
TB15-036	Wingless, QUIK-ALIGN	S-25109-1	S-25109-2

5. Trailer manufacturer or OEM supplied bolt-on mounting plate.

HT SERIES HT300T

1. WELD-ON FRAME BRACKETS			
MODELS	DESCRIPTION	PART NUMBER	
		ROADSIDE	CURBSIDE
-15-001 -15-005 -15-007 -15-017 -15-024 -15-501 -15-518 -15-701	Wingless, Weld Align	S-20196-1	S-20196-2
-17-001 -17-005 -17-007 -17-024 -17-501 -17-518 -17-701	Wingless, Weld Align	S-20197-1	S-20197-2
-15-016	Wingless, Weld Align	S-20286-1	S-20286-2
-17-003 -17-012 -17-019 -17-503 -17-520	Wingless, Weld Align	S-20065-1	S-20065-2
-17-025	Wingless, Weld Align	S-21123-1	S-21123-2
-19-001	Wingless, Weld Align	S-14190-1	S-14190-2
-21-003	Wingless, Weld Align	S-21454-1	S-21454-2
-23-001	Wingless, Weld Align	S-21150-1	S-21150-2
-15-021 -15-025	Wingless, Weld Align	S-21122-1	S-21122-2
TB15-001 TB15-023 TB15-024 TB15-027 TB15-518	Wingless, QUIK-ALIGN	S-23790-1	S-23790-2
TB17-001 TB17-024	Wingless, QUIK-ALIGN	S-24635-1	S-24635-2
TB19-007 TB19-020	Wingless, QUIK-ALIGN	S-23461-1	S-23461-2
TB15-016	Wingless, QUIK-ALIGN	S-23797-1	S-23797-2
TB16-026 TB17-003	Wingless, QUIK-ALIGN	S-21592-1	S-21592-2

NOTE: All part numbers listed are coated with black primer. Other options may exist. Please contact Hendrickson for assistance.

2. BOLT-ON FRAME BRACKETS			
MODELS	DESCRIPTION	PART NUMBER	
		ROADSIDE	CURBSIDE
-23-002	Wingless, Weld Align	S-22073-1	S-22073-2
-17-022	Wingless, Weld Align	S-22281-1	S-22281-2
-17-004	Wingless, Weld Align	S-20008-1	S-20008-2
TA15-070	Winged, QUIK-ALIGN®	S-25461-1	S-25461-2
TA15-036	Winged, QUIK-ALIGN	S-25618-1	S-25618-2
TA17-070	Winged, QUIK-ALIGN	S-25462-1	S-25462-2
TC15-060	Wingless, QUIK-ALIGN	S-24220-1	S-24220-2
TC15-061	Wingless, QUIK-ALIGN	S-24226-1	S-24226-2
TB17-022	Wingless, QUIK-ALIGN	S-23512-1	S-23512-2
TC17-060	Wingless, QUIK-ALIGN	S-24222-1	S-24222-2
TC17-061	Wingless, QUIK-ALIGN	S-24228-1	S-24228-2
TC19-060 TC19-062	Wingless, QUIK-ALIGN	S-24181-1	S-24181-2
TC19-061 TC19-063	Wingless, QUIK-ALIGN	S-24251-1	S-24251-2
TC15-060 TC15-064	Wingless, Weld Align	S-24220-1	S-24220-2
TC17-060 TC17-064 TC17-062 TC17-066	Wingless, Weld Align	S-24222-1	S-24222-2
TC19-060 TC19-064 TC19-062 TC19-066	Wingless, Weld Align	S-24181-1	S-24181-2
TC15-061 TC15-065	Wingless, Weld Align	S-24226-1	S-24226-2
TC17-061 TC17-065 TC17-063 TC17-067	Wingless, Weld Align	S-24228-1	S-24228-2
TC19-061 TC19-065 TC19-063 TC19-067	Wingless, Weld Align	S-24251-1	S-24251-2

HT® SERIES HT190U

1. WELD-ON FRAME BRACKETS			
MODELS	DESCRIPTION	PART NUMBER	
		ROADSIDE	CURBSIDE
U-9-001 U-9-007 U-9-020 U-9-022 U-9-024	Wingless, Weld Align	S-20211	S-20065-2
U-6-020 U-7-001 U-7-020 U-7-024 U-7.5-001 U-7.5-020 U-7.5-501 U-7.5-517	Wingless, Weld Align	S-20216	S-20064-2
U-6.75-001 U-6.75-002 U-6.75-003 U-6.75-020 U-7-021	Wingless, Weld Align	S-20222	S-20222
U-12-001	Wingless, Weld align	S-15188-1	S-14190-2
U-12-031	Wingless, Weld align	S-14959-1	S-14959-2
UB6-020 UB6-030 UB7-001 UB7-020 UB7-021 UB7.5-001 UB7.5-020	Wingless, QUIK-ALIGN	S-22580	S-21590-2
UB9-001 UB9-020	Wingless, QUIK-ALIGN	S-22601	S-21592-2
UB12-001	Wingless, QUIK-ALIGN	S-23265-1	S-23461-2

NOTE: All part numbers listed are coated with black primer. Other options may exist. Please contact Hendrickson for assistance.

HT® SERIES HT250U

1. WELD-ON FRAME BRACKETS

MODELS					DESCRIPTION	PART NUMBER	
						ROADSIDE	CURBSIDE
U-6.5-001 U-6.5-027	U-6.5-008 U-6.5-517	U-6.5-011 U-7.5-005	U-6.5-020 U-7.5-005	U-6.5-021	Wingless, Weld Align	S-20321-1	S-20321-2
U-7.5-001 U-7.5-027 U-9-004 U-9-024 U-9-517	U-7.5-002 U-7.5-517 U-9-006 U-9-025	U-7.5-003 U-9-001 U-9-008 U-9-027	U-7.5-008 U-9-002 U-9-010 U-9-028	U-7.5-017 U-9-003 U-9-022 U-9-029	Wingless, Weld Align	S-20322-1	S-20322-2
U-12-002 U-14-026	U-14-001 U-14-028	U-14-006 U-14-517	U-14-008	U-14-024	Wingless, Weld Align	S-20324-1	S-20324-2
U-12-001	U-12-006	U-12-008	U-12-026	U-12-517	Wingless, Weld Align	S-20323-1	S-20323-2
U-6.5-002	U-6.5-003	U-6.5-022			Wingless, Weld Align	S-20717-1	S-20717-2
U-9-020	U-9-021	U-9-023	U-15-022		Wingless, Weld Align	S-23860-3	S-23860-4
U-6.5-024					Wingless, Weld Align	S-22663-1	S-22663-2
U-7.5-021					Wingless, Weld Align	S-20357-1	S-20357-2
U-6.5-030	U-6.5-031				Wingless, Weld Align	S-15019-1	S-15019-2
UB14-001	UB14-006	UB14-023	UB14-027	UB14-028	Wingless, QUIK-ALIGN®	S-22634-1	S-22634-2
UB12-001	UB12-006	UB12-027	UB12-028		Wingless, QUIK-ALIGN	S-21688-1	S-21688-2
UB9-022	UB15-022				Wingless, QUIK-ALIGN	S-23859-1	S-23859-2
UB7.5-001 UB9-003	UB7.5-517 UB9-004	UB7.5-522 UB9-0010	UB9-001 UB9-013	UB9-002 UB9-522	Wingless, QUIK-ALIGN	S-21926-1	S-21926-2
UB6.5-001	UB6.5-022	UB6.5-517	UB7.5-005		Wingless, QUIK-ALIGN	S-21927-1	S-21927-2
UB6.5-002					Wingless, QUIK-ALIGN	S-22581-1	S-22581-2
UB15-022					Wingless, QUIK-ALIGN	S-23859-1	S-23859-2

2. BOLT-ON FRAME BRACKETS

MODELS		DESCRIPTION	PART NUMBER	
			ROADSIDE	CURBSIDE
U-12-007		Wingless, Weld Align	S-20337-1	S-20337-2
U-14-007		Wingless, Weld Align	S-21230-1	S-21230-2
U-6.5-007		Wingless, Weld Align	S-20326-1	S-20326-2
U-7.5-007	U-9-007	Wingless, Weld Align	S-20327-1	S-20327-2

NOTE: All part numbers listed are coated with black primer. Other options may exist. Please contact Hendrickson for assistance.

HT® SERIES HT250US

1. WELD-ON FRAME BRACKETS

RIDE HEIGHT (INCHES)	PIVOT HEIGHT (INCHES)	DESCRIPTION	PART NUMBER	
			ROADSIDE	CURBSIDE
3.5 4.0	4.5	Standard travel and shock mount	S-23848-1	S-23848-2
5.5 6.5	8.0	Standard travel and shock mount	S-22826-1	S-22826-2
		Standard travel and remote shock mount	S-22826-3	S-22826-4
6.5	10.0	Limited jounce and std. shock mount	S-22827-1	S-22827-2
	8.0	Extended rebound travel and std. shock mount	S-23166-1	S-23166-2
		Extended rebound travel and remote shock mount	S-22826-3	S-22826-4
		12 degree angled, standard travel and shock mount	S-22680-1	S-22680-2
7.5	8.0	6 degree rotated, standard travel and shock mount	S-22826-1	S-22826-2
		12 degree angled, standard travel and remote shock mount	S-29985-1	S-29985-2
7.5 9.0	10.0	Standard travel, limited jounce and std. shock mount	S-22827-1	S-22827-2
		Standard travel, limited jounce and remote shock mount	S-22827-3	S-22827-4
12.0	12.0	Standard travel and shock mount	S-22828-1	S-22828-2
		Standard travel and remote shock mount	S-22828-3	S-22828-4
	14.0	Limited jounce and std. shock mount	S-22829-1	S-22829-2
14.0	14.0	Standard travel and shock mount	S-22829-1	S-22829-2
		Frame clearance, standard travel and shock mount	S-23271-1	S-23271-2
	12.0	Standard travel and remote shock mount	S-22829-3	S-22829-4

2. BOLT-ON FRAME BRACKETS

RIDE HEIGHT (INCHES)	PIVOT HEIGHT (INCHES)	PATTERN TYPE	DESCRIPTION	PART NUMBER	
				ROADSIDE	CURBSIDE
5.5 6.5	8.375	Standard - 1/2"	Standard travel	S-23009-1	S-23009-2
		Standard - 1/2"			
		Standard - 5/8"		S-33061-1L	S-33061-1R
6.5 7.5 9.0	10.375	Standard - 1/2"	Limited jounce	S-23010-1	S-23010-2
		Standard - 1/2"		S-33061-2L	S-33061-2R
		Standard - 5/8"			
7.5 9.0	10.375	Standard - 1/2"	Standard travel	S-23010-1	S-23010-2
		Standard - 5/8"		S-33061-2L	S-33061-2R
12.0	12.5	Standard - 1/2"	Standard travel	S-23011-1	S-23011-2
		Standard - 5/8"	Standard travel	S-33061-3L	S-33061-3R
	14.5	Standard - 1/2"	Limited jounce	S-23012-1	S-23012-2
		Standard - 5/8"	Limited jounce	S-33061-4L	S-33061-4R
14.0	14.5	Standard - 1/2"	Standard travel	S-23012-1	S-23012-2
		Standard - 5/8"	Standard travel	S-33061-4L	S-33061-4R

NOTE: All part numbers listed are coated with black primer. Other options may exist. Please contact Hendrickson for assistance.

HT® SERIES HT300U

1. WELD-ON FRAME BRACKETS							
MODELS					DESCRIPTION	PART NUMBER	
						ROADSIDE	CURBSIDE
U-7.5-001 U-9-011 U-9-701	U-7.5-501 U-9-020	U-7.5-519 U-9-024	U-9-001 U-9-501	U-9-005 U-9-519	Wingless, Weld Align	S-20268-1	S-20268-2
U-12-001	U-12-005	U-12-011	U-12-015	U-12-024	Wingless, Weld Align	S-20269-1	S-20269-2
U-14-001 U-14-023	U-14-005 U-14-701	U-14-011	U-14-015	U-14-022	Wingless, Weld Align	S-20270-1	S-20270-2
U-17-001	U-17-011	U-17-024			Wingless, Weld Align	S-20271-1	S-20271-2
U-14-020					Wingless, Weld Align	S-22777-1	S-22777-2
U-9-021					Wingless, Weld Align	S-22779-1	S-22779-2
U-15-011					Wingless, Weld Align	S-22511-1	S-22511-2
U-17-020					Wingless, Weld Align	S-20914-1	S-20914-2
U-17-021					Wingless, Weld Align	D-21367-1	D-21367-2
U-14-021					Wingless, Weld Align	S-21380-1	S-21380-2
U-12-020					Wingless, Weld Align	S-22778-1	S-22778-2
U-9-022					Wingless, Weld Align	S-23408-1	S-23408-2
UB9-022					Wingless, QUIK-ALIGN®	S-24183-1	S-24183-2
UB14-022					Wingless, QUIK-ALIGN	S-29354-1	S-29354-2

HT SERIES HT300US

1. WELD-ON FRAME BRACKETS				
RIDE HEIGHT (INCHES)	PIVOT HEIGHT (INCHES)	DESCRIPTION	PART NUMBER	
			ROADSIDE	CURBSIDE
5.5	8.0	Standard travel and shock mount	S-22826-1	S-22826-2
		Standard travel and remote shock mount	S-22826-3	S-22826-4
6.5	8.0	Standard travel and std. shock mount	S-22826-1	S-22826-2
		Limited jounce, std. shock mount	S-22826-3	S-22826-4
	10.0	Extended rebound travel and std. shock mount	S-23166-1	S-23166-2
7.5 9.0	10.0	Standard travel, limited jounce and std. shock mount	S-22827-1	S-22827-2
		Standard travel, limited jounce and remote shock mount	S-22827-3	S-22827-4
12.0	12.0	Standard travel, limited jounce and std. shock mount	S-22828-1	S-22828-2
		Standard travel, limited jounce and remote shock mount	S-22828-3	S-22828-4
14.0	14.0	Standard travel, limited jounce and std. shock mount	S-22829-1	S-22829-2
		Standard travel, limited jounce and remote shock mount	S-22829-3	S-22829-4
17.0	17.0	Standard travel, limited jounce and std. shock mount	S-28470-1	S-28470-2
		Standard travel, limited jounce and remote shock mount	S-28470-3	S-28470-4

NOTE: All part numbers listed are coated with black primer. Other options may exist. Please contact Hendrickson for assistance.

2. BOLT-ON FRAME BRACKETS

RIDE HEIGHT (INCHES)	PIVOT HEIGHT (INCHES)	PATTERN TYPE	DESCRIPTION	PART NUMBER	
				ROADSIDE	CURBSIDE
5.5 6.5	8.375	Standard - 5/8"	Standard travel and shock mount	S-33061-1L	S-33061-1R
6.5	8.375		Limited jounce and std. shock mount	S-33061-1L	S-33061-1R
7.5 9.0	10.375		Standard travel, limited jounce and std. shock mount	S-33061-2L	S-33061-2R
12.0	12.5		Standard travel and std. shock mount	S-33061-3L	S-33061-3R

NOTE: All part numbers listed are coated with black primer. Other options may exist. Please contact Hendrickson for assistance.

FRAME BRACKET TOP PLATE PATTERN

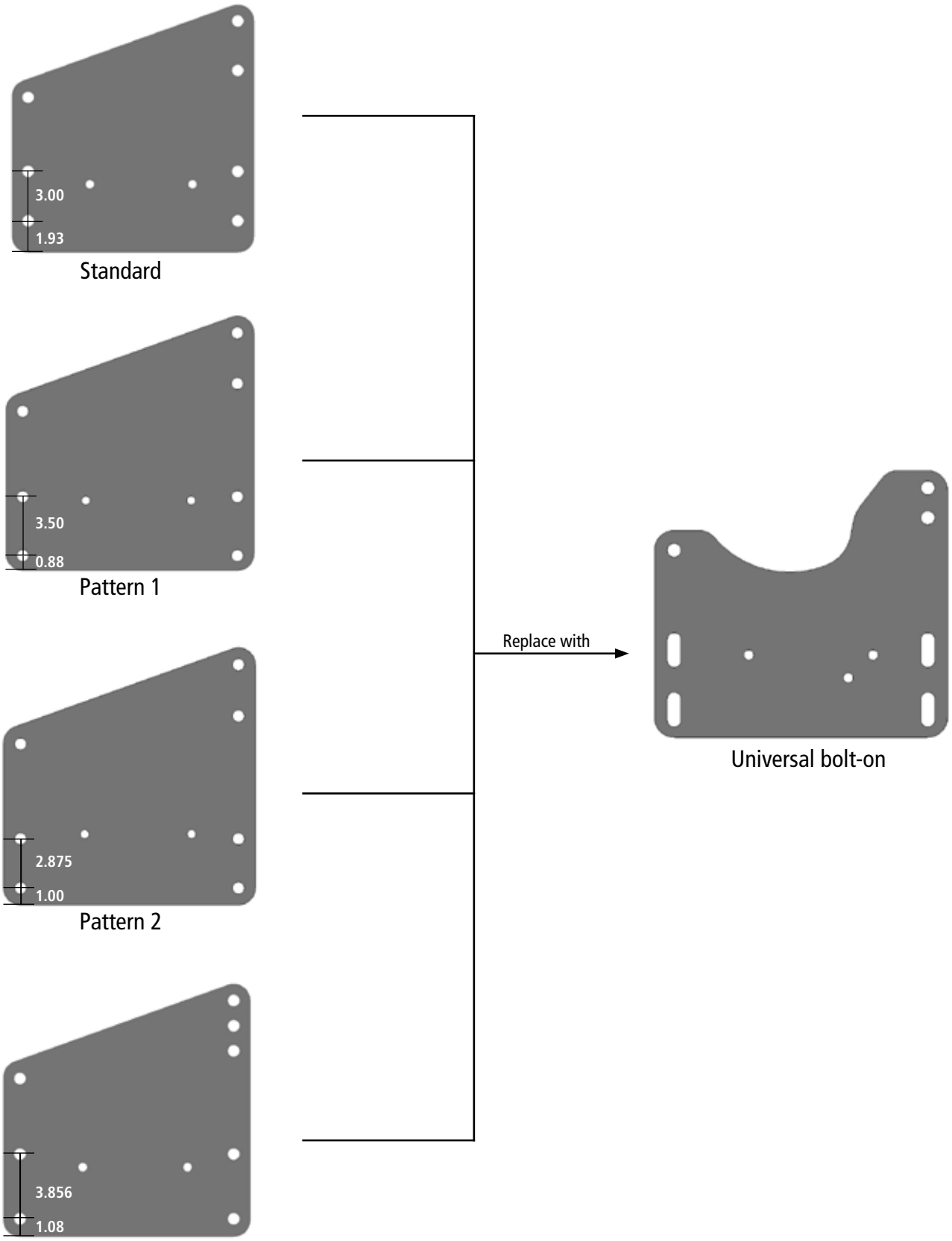

Note: Universal bolt-on frame brackets replace standard, pattern 1, pattern 2 and pattern 3 bolt-on frame brackets as of May 2016.

See D-26651 INTRAAX Bolt-on Mounting Drawing for universal bolt-on and other frame bracket pattern specifications.

INTRAAX® AANT 23K & AAT 23K / 25K / 30K

RIDE HEIGHT (inches)	SHOCK TYPE	SHOCK PART NUMBER	QTY. PER AXLE	SHOCK STRAP KIT	QTY. PER AXLE
All	Standard	S-23566	2	S-23086-1	1
	Extended Service w/ High Damping	S-24023	2	S-23086-2	1
	Limited Rebound	S-23361	2	S-23086-7	1
	Australia Road Friendly	S-21699	2	S-23086-2	1

INTRAAX AANT 23K WITH HIGH CONTROL

RIDE HEIGHT (inches)	SHOCK TYPE	SHOCK PART NUMBER	QTY. PER AXLE	SHOCK STRAP KIT	QTY. PER AXLE
13.0	Standard	S-23651	2	S-23086-4	1
	Extended Service w/ High Damping	S-24579	2	S-23086-8	1
13.5 – 17.0	Standard	S-23361	2	S-23086-7	1
17.0	Australia Road Friendly	S-21699	2	S-23086-2	1

INTRAAX AANL 23K

RIDE HEIGHT (inches)	SHOCK TYPE	SHOCK PART NUMBER	QTY. PER AXLE	SHOCK STRAP KIT	QTY. PER AXLE
6.5 – 9.0	Standard	S-23651	2	S-23086-4	1
	Extended Service w/ High Damping	S-24579	2	S-23086-8	1
12.0 14.0 16.0 17.0	Extended Service w/ High Damping	S-25515	2	S-23086-12	1

INTRAAX AANLS 20K & AAL 23K / 25K / 30K

RIDE HEIGHT (inches)	SHOCK TYPE	SHOCK PART NUMBER	QTY. PER AXLE	SHOCK STRAP KIT	QTY. PER AXLE
6.5 – 9.0	Standard	S-23651	2	S-23086-4	1
	Extended Service w/ High Damping	S-24579	2	S-23086-8	1
12.0	Standard	S-23566	2	S-23086-1	1
	Extended Service w/ High Damping	S-24023	2	S-23086-2	1
14.0 – 17.0	Standard	S-2212	2	S-23086-6	1
	Extended Service w/ High Damping	S-23316	2	S-23086-6	1

INTRAAX AAEDT 30K

RIDE HEIGHT (inches)	SHOCK TYPE	SHOCK PART NUMBER	QTY. PER AXLE	SHOCK STRAP KIT	QTY. PER AXLE
14.0	Extended Service w/ High Damping	S-23316	2	S-23086-4	1
15.0 – 17.0	Extended Service w/ High Damping	S-25515	2	S-23086-1	1

INTRAAX® AAEDL 30K

RIDE HEIGHT (inches)	SHOCK TYPE	SHOCK PART NUMBER	QTY. PER AXLE	SHOCK STRAP KIT	QTY. PER AXLE
9.0	Extended Service w/ High Damping	S-24579	2	S-23086-8	1
12.0	Extended Service w/ High Damping	S-24023	2	S-23086-2	1
14.0 – 19.0	Extended Service w/ High Damping	S-23316	2	S-23086-6	1

HT® SERIES HT190T & HT190U

MODEL	SHOCK TYPE	SHOCK PART NUMBER	QTY. PER AXLE	SHOCK STRAP KIT	QTY. PER AXLE
All	Standard	S-20001	2	S-14587-1	1

HT SERIES HT230T

MODEL			SHOCK TYPE	SHOCK PART NUMBER	QTY. PER AXLE	SHOCK STRAP KIT	QTY. PER AXLE
All models except below			Standard	S-20002	2	S-14587-1	1
-14-007	-14-011	-14-032	Standard	S-2160	2	S-14587-2	1
-15-007	-15-011	-15-012					
-15-028	-15-032	-16-007					
-17-007	-17-011	-17-012					
-17-032	TA14-007	TA15-007					
TA15-011	TA15-012	TA16-007					
TA17-007	TB14-033	TB15-028					
-14-017	-15-017	-15-517	Standard	S-20126	2	S-14587-8	1
-17-017	-17-517	TA14-520					
TA15-517	TA17-517						
-14-020	-14-021	AT14-021	Standard	S-2212	2	S-14587-3	1
TB14-021							
TA14-020			Standard	S-23361	2	S-14587-3	1
TA15-522	TA15-524	TA15-525	Standard	S-21699	2	S-23086-2	1
TA17-522							
-16-021			Standard	S-2218	2	S-14587-5	1

HT SERIES HT250T

MODEL	SHOCK TYPE	SHOCK PART NUMBER	QTY. PER AXLE	SHOCK STRAP KIT	QTY. PER AXLE
All models except below	Standard	S-2212	2	S-14587-3	1
HT250TB14-015	Standard	S-2160	2	S-14587-2	1

HT® SERIES HT300T

MODEL	SHOCK TYPE	SHOCK PART NUMBER	QTY. PER AXLE	SHOCK STRAP KIT	QTY. PER AXLE
All models except below	Standard	S-20126	2	S-14587-8	1
-15-007 -15-011 -15-012 -17-007 -17-011 -17-012 TB19-007 TB19-020	Standard	S-2160	2	S-14587-2	1
-15-017 -15-518 -17-518 -17-520	Standard	S-21553	2	S-14587-8	1
TB15-027	Standard	S-24579	2	S-23086-8	1
TB15-518	Standard	S-21699	2	S-23086-2	1

HT SERIES HT190U

MODEL	SHOCK TYPE	SHOCK PART NUMBER	QTY. PER AXLE	SHOCK STRAP KIT	QTY. PER AXLE
All models except below	Standard	S-20126	2	S-14587-8	1
U-6-020 U-7-001 U-7-020 U-7-021 U-7-024 U-7.5-001 U-7.5-020 U-7.5-501 U-9-001 U-9-003 U-9-003 U-9-020 U-9-024 U-9-030 U-12-001 U-12-030 U-12-031 UB6-020 UB6-022 UB6-030 UB7-001 UB7-020 UB7.5-001 UB7.5-020 UB9-001 UB9-020 UB12-001 UB12-003	Standard	S-20001	2	S-14587-1	1
U-7.5-517	Standard	S-20002	2	S-14587-1	1
U-6.75-001 U-6.75-002 U-6.75-003 U-6.75-020	Standard	S-2212	2	S-14587-3	1
U-9-022 UB7-021	Standard	S-23649	2	S-23086-5	1

HT® SERIES HT250U

MODEL			SHOCK TYPE	SHOCK PART NUMBER	QTY. PER AXLE	SHOCK STRAP KIT	QTY. PER AXLE
All models except below			Standard	S-20002	2	S-14587-1	1
U-6.5-027	U-9-027	U-9-028	Standard	S-21553	2	S-14587-8	1
U-14-028	UB6.5-522	U-7.5-027					
UB7.5-522	UB9-522	UB12-027					
UB12-028	UB14-027	UB14-028					
U-7.5-021	U-7.5-022	U-7.5-521	Standard	S-1667	2	S-14587-1	1
U-9-020	U-9-021	U-9-023	Standard	S-2212	2	S-14587-3	1
U-9.2-026	U-15-022	UB9-022					
UB15-022							
U-6.5-517	U-7.5-017	U-7.5-517	Standard	S-20126	2	S-14587-8	1
U-9-517	U-12-517	U-14-517					
UB6.5-517	UB7.5-517						
U-6.5-030	U-6.5-031		Standard	S-2160	2	S-14587-2	1

HT SERIES HT300U

MODEL			SHOCK TYPE	SHOCK PART NUMBER	QTY. PER AXLE	SHOCK STRAP KIT	QTY. PER AXLE
U-7.5-001	U-7.5-501	U-9-001	Standard	S-20126	2	S-14587-8	1
U-9-005	U-9-020	U-9-021					
U-9-022	U-9-024	U-9-501					
U-9-701	U-12-001	U-12-005					
U-12-020	U-12-024	U-14-001					
U-14-005	U-14-020	U-14-021					
U-14-022	U-14-023	U-14-701					
U-15-011	U-17-001	U-17-020					
U-17-021	U-17-024	UB9-022					
UB14-022							
U-7.5-519	U-9-011	U-9-519	Standard	S-21699	2	S-14587-8	1
U-12-011	U-12-015	U-14-011					
U-14-015	U-17-011						

HT® SERIES HT250US

RIDE HEIGHT (inches)	SHOCK TYPE	SHOCK PART NUMBER	QTY. PER AXLE	SHOCK STRAP KIT	QTY. PER AXLE
3.5 – 4.0	Standard Shock Mount, Std. Travel	S-23548	2	S-23086-11	1
5.5 – 6.5	Standard Shock Mount, Std. Travel	S-23650	2	S-23086-3	1
	Standard Shock Mount, Std. Travel, High Damping	S-23744	2	S-23086-10	1
	Remote Shock Mount, Std. Travel	S-23650	2	S-14587-9	1
	Remote Shock Mount, Std. Travel, High Damping	S-23744	2	S-14587-11	1
6.5	Standard Shock Mount, Extended Rebound	S-23651	2	S-23806-4	1
	Standard Shock Mount, Extended Rebound, High Damping	S-24579	2	S-23086-8	1
6.5 – 9.0	Remote Shock Mount, Extended Rebound	S-2212	2	S-14587-3	1
	Remote Shock Mount, Extended Rebound, High Damping	S-23316	2	S-14587-3	1
6.5 – 12.0	Standard Shock Mount, Limited Jounce	S-23649	2	S-23086-5	1
	Standard Shock Mount, Limited Jounce, High Damping	S-23743	2	S-23086-5	1
6.5 7.5 14.0	Angled and Frame Clearance Mounting, Std. Travel	S-23651	2	–	–
	Angled and Frame Clearance Mounting, Std. Travel, High Damping	S-24579	2	–	–
7.5 – 9.0	Remote Shock Mount, Std. Travel	S-23649	2	S-14587-10	1
	Remote Shock Mount, Std. Travel, High Damping	S-23743	2	S-14587-10	1
7.5 – 14.0	Standard Shock Mount, Std. Travel	S-23649	2	S-23086-5	1
	Standard Shock Mount, Std. Travel, High Damping	S-23743	2	S-23086-5	1
12.0 – 14.0	Remote Shock Mount, Std. Travel	S-2212	2	S-14587-3	1

HT SERIES HT300US

RIDE HEIGHT (inches)	SHOCK TYPE	SHOCK PART NUMBER	QTY. PER AXLE	SHOCK STRAP KIT	QTY. PER AXLE
5.5 – 6.5	Standard Shock Mount, Std. Travel	S-23744	2	S-23086-10	1
	Remote Shock Mount, Std. Travel		2	S-14587-11	1
6.5	Standard Shock Mount, Limited Jounce Travel	S-23744	2	S-23086-10	1
	Standard Shock Mount, Extended Rebound Travel	S-24579	2	S-23086-8	1
	Remote Shock Mount, Limited Jounce Travel	S-23744	2	S-14587-11	1
	Remote Shock Mount, Extended Rebound Travel	S-23316	2	S-14587-3	1
6.5 – 12.0	Standard Shock Mount, Limited Jounce	S-24579	2	S-23086-5	1
	Standard Shock Mount, Limited Jounce, High Damping	S-23743	2		1
7.5 – 12.0	Remote Shock Mount, Std. Travel, Limited Jounce	S-23743	2	S-14587-10	1
7.5 – 17.0	Standard Shock Mount, Std. Travel, Limited Jounce	S-23743	2	S-23086-5	1
14.0 – 17.0	Remote Shock Mount, Std. Travel	S-23316	2	S-14587-3	1
	Remote Shock Mount, Limited Jounce Travel		2		1

CONNEX® ST CXSL 25K

RIDE HEIGHT (inches)	SHOCK TYPE	SHOCK PART NUMBER	QTY. PER AXLE	SHOCK STRAP KIT	QTY. PER AXLE
14.0 – 19.0	Standard	S-2212	2	S-14587-3	2

CONNEX CXU 23K / 25K

RIDE HEIGHT (inches)	SHOCK TYPE	SHOCK PART NUMBER	QTY. PER AXLE	SHOCK STRAP KIT	QTY. PER AXLE
5.5 – 6.5	Standard	S-23650	2	S-23086-3	1
	Extended Service	S-23744	2	S-23086-10	1
7.5 – 9.0	Standard	S-38073	2	S-23086-5	1
	Extended Service	S-38074	2		

CONNEX CXY 23K / 25K

RIDE HEIGHT (inches)	SHOCK TYPE	SHOCK PART NUMBER	QTY. PER AXLE	SHOCK STRAP KIT	QTY. PER AXLE
6.5 – 9.0	Standard	S-23651	2	S-23086-4	1

INTRAAX® SP AAZNT 23K / 46K / 69K

RIDE HEIGHT (inches)	SHOCK TYPE	SHOCK PART NUMBER	QTY. PER AXLE	SHOCK STRAP KIT	QTY. PER AXLE
12.0 – 17.0	Standard	S-23566	2	S-23086-1	1
	Extended Service w/ High Damping	S-24023	2	S-23086-2	1

INTRAAX SP AAZL 23K / 46K

RIDE HEIGHT (inches)	SHOCK TYPE	SHOCK PART NUMBER	QTY. PER AXLE	SHOCK STRAP KIT	QTY. PER AXLE
6.5 – 9.0	Standard	S-23651	2	S-23086-4	1
	Extended Service w/ High Damping	S-24579	2	S-23086-8	1
12.0	Standard	S-23566	2	S-23086-1	1
	Extended Service w/ High Damping	S-24023	2	S-23086-2	1

VANTRAAX® HKANT 23K

AXLE SPACING (inches)	SHOCK TYPE	SHOCK PART NUMBER	QTY. PER AXLE	SHOCK STRAP KIT	QTY. PER AXLE
N/A	Standard	S-27715	2	S-23086-1	1

VANTRAAX HKANL 23K

AXLE SPACING (inches)	SHOCK TYPE	SHOCK PART NUMBER	QTY. PER AXLE	SHOCK STRAP KIT	QTY. PER AXLE
N/A	Standard	S-25515	2	S-23086-12	1

VANTRAAX HKANT 40K

AXLE SPACING (inches)	SHOCK TYPE	SHOCK PART NUMBER	QTY. PER AXLE	SHOCK STRAP KIT	QTY. PER AXLE
49	Standard	S-24088	2	S-23086-1	1

VANTRAAX HKANT 46K

AXLE SPACING (inches)	SHOCK TYPE	SHOCK PART NUMBER	QTY. PER AXLE	SHOCK STRAP KIT	QTY. PER AXLE
49	Standard	S-23566	2	S-23086-1	1
121		S-22715			

VANTRAAX HKAT 50K

AXLE SPACING (inches)	SHOCK TYPE	SHOCK PART NUMBER	QTY. PER AXLE	SHOCK STRAP KIT	QTY. PER AXLE
49	Standard	S-24023	2	S-23086-2	1

VANTRAAX HKAT 69K23 & HKANT 69K23

AXLE SPACING (inches)	SHOCK TYPE	SHOCK PART NUMBER	QTY. PER AXLE	SHOCK STRAP KIT	QTY. PER AXLE
49 60 72	Standard	S-23566	2	S-23086-1	1
49 (15″ RH)	Standard	S-23361	2	S-23086-7	1

VANTRAAX HKAT 69K25

AXLE SPACING (inches)	SHOCK TYPE	SHOCK PART NUMBER	QTY. PER AXLE	SHOCK STRAP KIT	QTY. PER AXLE
60 72	Standard	S-24023	2	S-23086-2	1

VANTRAAX HKAL 46K & HKARL 46K

AXLE SPACING (inches)	SHOCK TYPE	SHOCK PART NUMBER	QTY. PER AXLE	SHOCK STRAP KIT	QTY. PER AXLE
49	Standard	S-23566	2	S-23086-1	1

HK™ SERIES HTHKA

RIDE HEIGHT (inches)	SHOCK TYPE	SHOCK PART NUMBER	QTY. PER AXLE	SHOCK STRAP KIT	QTY. PER AXLE
All	Standard	S-21292	2	S-14587-9	1

HK SERIES HTHKR

RIDE HEIGHT (inches)	SHOCK TYPE	SHOCK PART NUMBER	QTY. PER AXLE	SHOCK STRAP KIT	QTY. PER AXLE
All	Standard	S-23650	2	S-23086-3	1

HK SERIES HK200M

AXLE SPACING (inches)	SHOCK TYPE	SHOCK PART NUMBER	QTY. PER AXLE	SHOCK STRAP KIT	QTY. PER AXLE
9.25	Standard	S-2218	2	S-14587-5	1
11.0 12.0	Standard	S-4084	2	S-14587-6	1

Height Control Valves

Trailer air suspension systems require precise air flow management. Using an Advanced Shear-Seal® design to ensure accurate air flow, Hendrickson Height Control Valves (HCV) deliver superior performance and durability.

- Precise, highly repeatable dead band
- High air flow and a proportional response
- Prolongs air spring and shock absorber life
- Specifically designed and tested for optimum performance with Hendrickson air suspensions

Height Control Valves — Drum Brake

Product Family	Suspension Model	Axle Diameter	Dump Feature		No PPV	No 90-degree Brass Fittings	Part Number
			Without	With			
INTRAAX®	AANT 23K	5 inch / 5.75 inch LDA™	X				AKH0270-3
			X		X		AKH0270B-3
				X			AKHD0270-3
				X	X		AKHD0270B-3
				X		X	AKHD0270F-3
	AAT 23K AAT 25K AAT 30K	5 inch / 5.75 inch LDA	X				AKH-238-3
			X		X		AKH-238B-3
				X			AKHD-238-3
				X		X	AKHD-238F-3
	AAEDT 30K	5 inch	X				AKH-235-3
			X		X		AKH-235B-3
				X			AKHD-235-3
	AANLS 20K	5 inch	X				AKH0275-3
				X			AKHD0275-3
	AANL 23K	5.75 inch LDA	X				AKH0292-3
			X		X		AKH0292B-3
				X			AKHD0292-3
				X		X	AKHD0292F-3
	AAL 23K AAL 25K AAL 30K AAEDL 30K	5 inch	X				AKH-235-3
			X		X		AKH-235B-3
				X			AKHD-235-3
	AAL 23K AAL 25K AAL 30K	5.75 inch LDA	X				AKH0306-3
			X		X		AKH0306B-3
				X			AKHD0306-3
				X		X	AKHD0306F-3
CONNEX®	CXU 23K CXU 25K	5 inch	X				AKH-236-3
			X		X		AKH-236B-3
				X			AKHD-236-3
				X		X	AKHD-236F-3
HT® Series	HT190T / HT190U HT230 HT250T / HT250U HT300T / HT300U HTHKR	5 inch	X				AKH-134-3
			X		X		AKH-134B-3
				X			AKHD-195-3
			X		X		AKH-179-2
	HT250US HT300US	5 inch	X				AKH-236-3
			X		X		AKH-236B-3
			X			X	AKH-236F-3
				X			AKHD-236-3
				X		X	AKHD-236F-3
T Series	All Models	5 inch	X				AKH-239-3
				X			AKHD-239-3

AKH-181-3

AKHD-235-3

Product Family	Suspension Model	Axle Diameter	Dump Feature		No PPV	No 90-degree Brass Fittings	Part Number
			Without	With			
VANTRAAX®	HKANT 23K HKANT 40K HKANT 46K HKAT 50K HKAT 69K23 HKAT 69K25 HKANT 69K23	5 inch / 5.75 inch LDA™	X				AKH-181-3
				X			AKHD-203-3
	HKAL 46K HKARL 46K	5 inch	X				AKH-235-3
			X		X		AKH-235B-3
				X			AKHD-235-3
	HKANL 23K HKAL 46K HKARL 46K	5.75 inch LDA	X				AKH0306-3
			X		X		AKH0306B-3
				X			AKHD0306-3
				X		X	AKHD0306F-3
HK™ Series	HK190 HK230	5 inch	X				AKH-187-3
				X			AKHD-205-3
INTRAAX® SP	AAZNT 23K AAZNT 46K AAZNT 69K	5 inch / 5.75 inch LDA	X				AKH0270-3
			X		X		AKH0270B-3
				X			AKHD0270-3
				X	X		AKHD0270B-3
				X		X	AKHD0270F-3
	AAZL 23K AAZL 46K	5 inch	X				AKH-235-3
			X		X		AKH-235B-3
				X			AKHD-235-3
	AAZL 23K AAZL 46K	5.75 inch LDA	X				AKH0306-3
			X		X		AKH0306B-3
				X			AKHD0306-3
				X		X	AKHD0306F-3

Kits listed include height control valve, mounting brackets, 3/8-inch tube fittings and bolted link assembly.

Bulk Height Control Valves — Drum Brake

Suspension Model	Kit Description	Part Number
AAL, AAEDL, AAEDT, CXU, HT250US, HT300US, HKAL, AAZL	Height Control Valve, Bulk 50 (includes A-28651 long arm)	AKH0249[1]
AANT, AAT, AANL, AANLS, HT, HKANT, HKAT, HK, HTHKR, HKARL, HS, AAZNT	Height Control Valve, Bulk 50 (includes A-28648 short arm)	AKH0250
AAL, AAEDL, AAEDT, CXU, HT250US, HT300US, HKAL, AAZL	Integral Dump Height Control Valve, Bulk 35 (includes A-29391 long arm)	AKHD0249
AANT, AAT, AANL, AANLS, HT, HKANT, HKAT, HK, HTHKR, HKARL, HS, AAZNT	Integral Dump Height Control Valve, Bulk 35 (includes A-29393 short arm)	AKHD0250

[1] The long arm HCV can be used on short arm HCV applications. However, the installer must remove the end of the arm and use the bolt hole in the arm that is closest to the valve body.

Height Control Valve Hardware Kits — Drum Brake

Suspension Model	Axle Diameter	Fasteners	Mounting Brackets	No 90-degree Brass Fittings	Bolted Link Assembly	Part Number
AAT	5 inch / 5.75 inch LDA™	X	X		X	AKH0252
		X	X	X	X	AKH0252F
		X	X	X		AKH0252-1
AAL, AAEDL, AAEDT, HKAL, HKARL, AAZL	5 inch	X	X		X	AKH0253
		X	X	X		AKH0253-1
AAL, HKAL, HKARL, AAZL	5.75 inch LDA	X	X		X	AKH0309
		X	X	X		AKH0309-1
HKANT, HKAT	5 inch / 5.75 inch LDA	X	X		X	AKH0256
		X	X	X		AKH0256-1
AANT, AAZNT	5 inch / 5.75 inch LDA	X	X		X	AKH0262
		X	X	X		AKH0262-1
AANL	5.75 inch LDA	X	X		X	AKH0289
		X	X	X		AKH0289-1
AANLS	5 inch	X	X		X	AKH0290
		X	X	X		AKH0290-1

Specialty Height Control Valves — Drum and Disc Brake

Product Family	Suspension Model	Brake Type	Dump Feature		No PPV	No 90-degree Brass Fittings	Kit Description	Part Number
			Without	With				
INTRAAX®	AAT at 14 inch RH	Drum	X		X		Tube fittings not included; supplied with fixed bolt link	AKH-244B
	AANLS 20K	Drum	X				Includes a U-bolt for mounting the HCV	AKH0266-3
			X		X			AKH0266B-3
				X				AKHD0266-3
				X	X	X		AKHD0266B-3
		Disc	X					AKH0311-3
				X				AKHD0311-3
				X	X	X		AKHD0311B-3
HT® Series	HT250US/HT300US at 6.5 inch RH	Drum	X		X		Tube fittings not included; supplied with fixed bolt link	AKH-242B
VANTRAAX®	HRRNT 40K	Drum	X				Tube fittings not included	AKH0261
INTRAAX® SP	AAZL (5 inch)	Drum	X				Includes a valve to raise the trailer for slider positioning	AKH0267-3
			X		X			AKH0267B-3
	AAZL (5.75 inch LDA™)	Drum	X					AKH0310-3

Height Control Valves — Disc Brake

Product Family	Suspension Model	Axle Diameter	Dump Feature		No PPV	No 90-degree Brass Fittings	Part Number
			Without	With			
INTRAAX®	AANLS 20K	5 inch	X				AKH0312-3
				X			AKHD0312-3
	AANT 23K	5 inch	X				AKH0281-3
				X			AKHD0281-3
	AANT 23K AANL 23K	5.75 inch LDA™	X				AKH0282-3
			X		X		AKH0282B-3
			X			X	AKH0282F-3
				X			AKHD0282-3
				X	X		AKHD0282B-3
				X		X	AKHD0282F-3
	AAT 23K AAT 25K AAT 30K AAL 23K AAL 25K AAL 30K AAEDL 30K AAEDT 30K	5 inch	X				AKH-235-3
			X		X		AKH-235B-3
				X			AKHD-235-3
	AAL 23K AAL 25K AAL 30K	5.75 inch LDA	X				AKH0306-3
			X		X		AKH0306B-3
				X			AKHD0306-3
				X		X	AKHD0306F-3
	AAT 23K AAT 25K AAT 30K	5.75 inch LDA	X				AKH0288-3
			X		X		AKH0288B-3
				X			AKHD0288-3
				X	X		AKHD0288B-3
VANTRAAX®	HKAT 50K HKAT 69K25	5 inch	X				AKH0283-3
				X			AKHD0283-3
	HKANT 23K HKANT 40K HKANT 46K HKAT 50K HKANT 69K23	5.75 inch LDA	X				AKH0284-3
				X			AKHD0284-3
	HKARL 46K	5.75 inch LDA	X				AKH0306-3
			X		X		AKH0306B-3
				X			AKHD0306-3
				X		X	AKHD0306F-3
INTRAAX® SP	AAZNT 23K AAZNT 46K AAZNT 69K	5 inch	X				AKH0281-3
				X			AKHD0281-3
		5.75 inch LDA	X				AKH0282-3
			X		X		AKH0282B-3
			X			X	AKH0282F-3
				X			AKHD0282-3
				X	X		AKHD0282B-3
				X		X	AKHD0282F-3

Kits listed include height control valve, mounting brackets, 3/8-inch tube fittings and bolted link assembly.

Aftermarket

Description	Suspension Model	Ride Height	Dump Feature		Fitting Style	Part Number[1]
			Without	With		
Replacement Height Control Valve	INTRAAX® CONNEX® HT® Series T Series VANTRAAX® HK™ Series INTRAAX® SP	All	X		None	VS-227
				X	None	VS-228
	ULTRAA-K®	16"	X		Compression	VS-33704-3
				X		VS-33705-3
			X		PTC	VS-33704-4
				X		VS-33705-4
Replacement DST® Valve (Height Control Differential Dump Valve)	VANTRAAX®	All		X	None	VS-27116
	ULTRAA-K®	16"		X	Compression	VS-33703-3
					PTC	VS-33703-4

[1] Kits listed do not include pressure protection valve or link assembly.

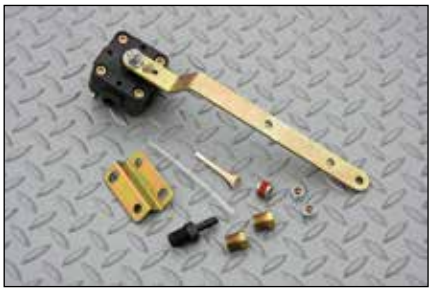

VS-227

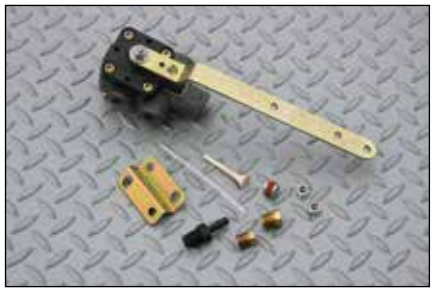

VS-228

Description	Suspension Model	Ride Height	HCV Model	Part Number
Pressure Protection Valve	All	N/A	N/A	VS-38941
Bolted Link Assembly	INTRAAX® CONNEX® HT® Series T Series VANTRAAX® HK™ Series INTRAAX® SP	All	VS-227 and VS-228	S-14187
Fixed Link Assembly	ULTRAA-K®	16"	VS-33703-3, VS-33703-4, VS-33704-3 VS-33704-4, VS-33705-3, VS-33705-4	VS-33702-1

VS-38941

S-14187

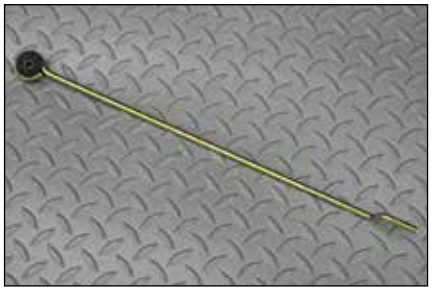

VS-33702-1

Load Scales

Hendrickson Load Scale kits provide an easy solution to quickly determine the approximate suspension load. Each contains a gauge that measures air pressure and a method for converting pressure to suspension load. Depending on the load scale model, the gauge provides a reading of suspension weight or a reading of air spring pressure with a conversion table.

- Compact enclosure size and external mounting tabs provided for convenient installation
- Integrated valve body reduces fittings and potential leak points
- Anodized aluminum valve body for light weight and high corrosion resistance
- Teflon seals ensure a wide operating temperature range and high chemical resistance
- Polycarbonate enclosure for cold impact resistance includes molded-in hinge and latch

AKLS1005

AKLS1006

Load Scale Decals — Liquid Filled Gauges

Product Family	Suspension Model	Part Number
INTRAAX®	AANLS 20K	L912
	AAL, AAT, AANL, AANT 23K (Low Pressure Air Spring)	L912
	AAL, AAT, AANL, AANT 23K	L911
	AAEDL, AAEDT 30K	L927
	AAL, AAT 25K	L912
	AAL, AAT 30K	L913
INTRAAX® SP	AAZNT, AAZL 23K	L911
	AAZNT, AAZL 46K	
	AAZNT 69K	
HT® Series	HT190	L905
	HT190U	L903
	HT230	L914
	HT250T	L904
	HT250U at 9-inch Ride Height (Air Spring C-13122)	T90001
	HT250U at 15-inch Ride Height (Air Spring C-13122)	T90002
	HT250U, HT250US (Air Spring C-20124)	L904
	HT250U, HT250US (Air Spring C-20127)	L906
	HT300	L909
	HT300U	L908
	HT300US	T90004

Product Family	Suspension Model	Part Number
CONNEX®	CXU 23K	T90006
	CXU 25K	T90007
VANTRAAX®	HKANT 23K, 46K, 69K23	L911
	HKANT 40K	L1045[1]
		L911[2]
	HKANT 40K with ZMD®	T90003
	HKAT 50K, 69K25	L912
	HKANL 23K	L911
	HKAL, HKARL 46K	L911
ULTRAA-K®	UTKNT 40K (Air Spring C-34733)	T90003
	UTKNT 40K (Air Spring C-38000)	L1045
HK™ Series	HK190T	L907
	HK230T	L910
	HTHKR	L910

[1] For HKANT 40K built in 2008 or later.

[2] For HKANT 40K built prior to 2008 or HKANT 40K with SMARTLIFT® option.

NOTE: The load scale decal is not included with the load scale kit. Determine the appropriate load scale kit for the suspension model specified and order the corresponding decal separately.

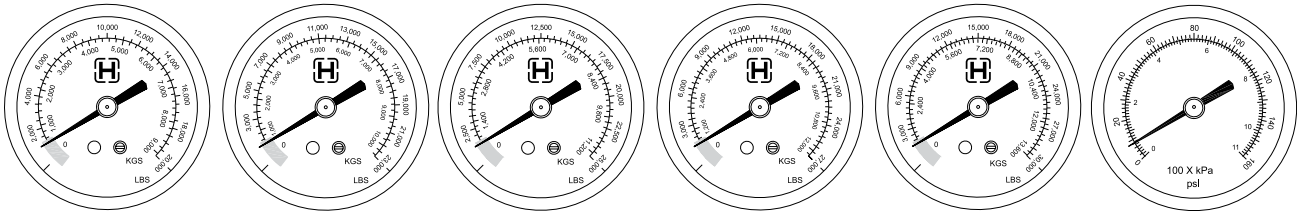

A B C D E F

Load Scales — Polycarbonate Box

Product Family	Suspension Model	Gauge Type	Gauge Range	Gauge Face	Part Number: Without Dump (AKLS1005)	Part Number: With Dump (AKLS1006)
INTRAAX®	AANLS 20K	Dry	0 - 25,000	C	-4	-4
	AAL, AAT, AANL, AANT 23K (Standard Air Spring)	Dry	0 - 23,000	B	-3	-3
	AAL, AAT, AANL, AANT 23K (Low Pressure Air Spring)	Dry	0 - 25,000	C	-4	-4
	AAL 25K, AAT 25K	Dry	0 - 25,000	C	-4	-4
	AAL 30K, AAT 30K	Dry	0 - 30,000	E	-6	-6
	AAEDL 30K, AAEDT 30K	Dry	0 - 30,000	E	-6	-6
INTRAAX® SP	AAZNT 23K, AAZNT 46K, AAZNT 69K	Dry	0 - 23,000	B	-3	-3
	AAZL 23K, AAZL 46K	Dry	0 - 23,000	B	-3	-3
HK™ Series	HK190T	Dry	0 - 23,000	B	-3	-3
	HK230T	Dry	0 - 23,000	B	-3	-3
VANTRAAX®	HKANT 23K, HKANT 46K	Dry	0 - 23,000	B	-3	-3
	HKANT 40K	Dry	0 - 20,000	A	-2	-2
	HKAT 50K, HKAT 69K25	Dry	0 - 25,000	C	-4	-4
	HKANT 69K23	Dry	0 - 23,000	B	-3	-3
	HKAT 69K23	Dry	0 - 23,000	B	-3	-3
	HKARL 46K	Dry	0 - 23,000	B	-3	-3
	HKANL 23K	Dry	0 - 23,000	B	-3	-3
	HKAL 46K	Dry	0 - 23,000	B	-3	-3
ULTRAA-K®	UTKNT 40K	Dry	0 - 20,000	A	-2	-2
CONNEX®	CXU 23K	Dry	0 - 23,000	B	-3	-3
	CXU 25K	Dry	0 - 25,000	C	-4	-4
HT® Series	HTHKR	Dry	0 - 23,000	B	-3	-3
	HT190	Dry	0 - 20,000	A	-2	-2
	HT190U	Dry	0 - 23,000	B	-3	-3
	HT230	Dry	0 - 23,000	B	-3	-3
	HT250T	Dry	0 - 25,000	C	-4	-4
	HT250U (Air Spring C-2 0124)	Dry	0 - 25,000	C	-4	-4
	HT250U (Air Spring C-20127)	Dry	0 - 30,000	E	-6	-6
	HT250U (Air Spring C-13122, 9 inch Ride Height)	Dry	0 - 30,000	E	-6	-6
	HT250U (Air Spring C-13122, 15 inch Ride Height)	Dry	0 - 27,000	D	-5	-5
	HT250US (Air Spring C-20124)	Dry	0 - 25,000	C	-4	-4
	HT250US (Air Spring C-20127)	Dry	0 - 30,000	E	-6	-6
	HT300	Dry	0 - 30,000	E	-6	-6
	HT300U	Dry	0 - 30,000	E	-6	-6
	HT300US	Dry	0 - 30,000	E	-6	-6
T Series	T-6-068	Dry	0 - 25,000	C	-4	-4
	T-6-252	Dry	0 - 27,000	D	-5	-5
	T-RL	Dry	0 - 30,000	E	-6	-6
All	All Models	Liquid	0 - 160 psi	F	-1	-1

Load Scales — Stainless Steel Box

Product Family	Suspension Model	Gauge Type	Gauge Range	Gauge Face	Part Number	
					Without Dump (AKLS2005)	With Dump (AKLS2006)
INTRAAX®	AANLS 20K	Dry	0 - 25,000	C	-4	-4
	AAL, AAT, AANL, AANT 23K (Standard Air Spring)	Dry	0 - 23,000	B	-3	-3
	AAL, AAT, AANL, AANT 23K (Low Pressure Air Spring)	Dry	0 - 25,000	C	-4	-4
	AAL 25K, AAT 25K	Dry	0 - 25,000	C	-4	-4
	AAL 30K, AAT 30K	Dry	0 - 30,000	E	-6	-6
	AAEDL 30K, AAEDT 30K	Dry	0 - 30,000	E	-6	-6
INTRAAX® SP	AAZNT 23K, AAZNT 46K, AAZNT 69K	Dry	0 - 23,000	B	-3	-3
	AAZL 23K, AAZL 46K	Dry	0 - 23,000	B	-3	-3
HK™ Series	HK190T	Dry	0 - 23,000	B	-3	-3
	HK230T	Dry	0 - 23,000	B	-3	-3
VANTRAAX®	HKANT 23K, HKANT 46K	Dry	0 - 23,000	B	-3	-3
	HKANT 40K	Dry	0 - 20,000	A	-2	-2
	HKAT 50K, HKAT 69K25	Dry	0 - 25,000	C	-4	-4
	HKANT 69K23, HKAT 69K23	Dry	0 - 23,000	B	-3	-3
	HKARL 46K	Dry	0 - 23,000	B	-3	-3
	HKANL 23K	Dry	0 - 23,000	B	-3	-3
	HKAL 46K	Dry	0 - 23,000	B	-3	-3
ULTRAA-K®	UTKNT 40K	Dry	0 - 20,000	A	-2	-2
CONNEX®	CXU 23K	Dry	0 - 23,000	B	-3	-3
	CXU 25K	Dry	0 - 25,000	C	-4	-4
HT® Series	HTHKR	Dry	0 - 23,000	B	-3	-3
	HT190	Dry	0 - 20,000	A	-2	-2
	HT190U	Dry	0 - 23,000	B	-3	-3
	HT230	Dry	0 - 23,000	B	-3	-3
	HT250T	Dry	0 - 25,000	C	-4	-4
	HT250U (Air Spring C-20124)	Dry	0 - 25,000	C	-4	-4
	HT250U (Air Spring C-20127)	Dry	0 - 30,000	E	-6	-6
	HT250U (Air Spring C-13122, 9 inch Ride Height)	Dry	0 - 30,000	E	-6	-6
	HT250U (Air Spring C-13122, 15 inch Ride Height)	Dry	0 - 27,000	D	-5	-5
	HT250US (Air Spring C-20124)	Dry	0 - 25,000	C	-4	-4
	HT250US (Air Spring C-20127)	Dry	0 - 30,000	E	-6	-6
	HT300	Dry	0 - 30,000	E	-6	-6
	HT300U	Dry	0 - 30,000	E	-6	-6
	HT300US	Dry	0 - 30,000	E	-6	-6
T Series	T-6-068	Dry	0 - 25,000	C	-4	-4
	T-6-252	Dry	0 - 27,000	D	-5	-5
	T-RL	Dry	0 - 30,000	E	-6	-6
All	All Models	Liquid	0 - 160 psi	F	-1	-1

Aftermarket

Description	Load Scale Model	Part Number
Replacement Polycarbonate Enclosure	AKLS1005	VS-31845-3
Replacement Polycarbonate Enclosure	AKLS1006	VS-31845-2
Replacement Stainless Steel Enclosure	AKLS2005, AKLS2006	VS-32312
Replacement Liquid-Filled Gauge	All -1 Models with Liquid Gauge	VS-24120
Replacement Dry Gauge	All -2 Models with Dry Gauge	VS-22534-1
	All -3 Models with Dry Gauge	VS-22534-2
	All -4 Models with Dry Gauge	VS-22534-3
	All -5 Models with Dry Gauge	VS-22534-4
	All -6 Models with Dry Gauge	VS-22534-5

Lift Axle Controls

Electric / Manual Lift Controls

Specify Hendrickson's popular line of electric/manual lift axle controls to simplify trailer plumbing. The compact design incorporates an electric solenoid, manual operator, lift bag valve and ride bag valve into one integrated body. For regulated versions, the regulator and gauge are incorporated into the main valve body to eliminate the need for external plumbing and fittings.

- Modular, high flow design is available in regulated and equalizing versions
- Designed to survive harsh trailer environment with or without an enclosure
- Fail mode is field configurable from "normally down" to "normally up"

Mounting Option		Valve Configuration		Brake Isolation		Part Number
Stainless Steel Enclosure	Mounting Bracket	Regulating	Equalizing	Without	With	
	X		X	X		AKAD0008-1
	X		X		X	AKAD0008-2 [1]
	X	X		X		AKAD0009-1
	X	X			X	AKAD0009-2 [1]
X			X	X		AKAD2010-1
X			X		X	AKAD2010-2 [1]
X		X		X		AKAD2011-1
X		X			X	AKAD2011-2 [1]

[1] The brake isolation feature requires a brake relay (not available from Hendrickson). When plumbed, the brake relay controls the pressure to the liftable suspension brakes independently of the primary suspension brakes.

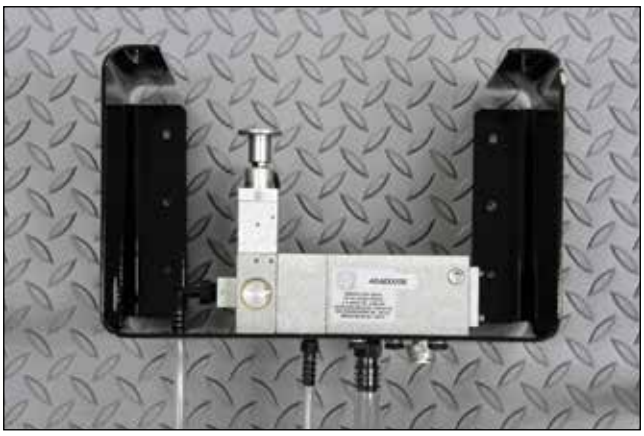

AKAD0008

AKAD2011

Aftermarket

Description	Lift Axle Model	Part Number
Replacement Mounting Bracket	AKAD0008-1, AKAD0008-2 AKAD0009-1, AKAD0009-2	VS-31531
Replacement Stainless Steel Enclosure	AKAD2010-1, AKAD2010-2 AKAD2011-1, AKAD2011-2	VS-31557

Reverse Lift Axle Control

- For use with liftable/steerable trailer axles
- Moving in reverse 3 feet automatically keys lifting of axle
- Moving forward 80 feet automatically triggers lowering of axle
- To be used in conjunction with electro-pneumatic lift controls: AKAD0008, AKAD0009, AKAD2010 and AKAD2011

Description	Brake Type	Part Number
Automatic Lift Axle Control Kit	Drum	EKAD0001
	Disc	EKAD0001-1

EKAD0001

Manual Lift Controls

- Available in regulating and equalizing versions
- The Dial-A-Ride control utilizes a convenient mounting panel

Description	Valve Configuration	Part Number
Manual Dial-A-Ride	Regulating	VS-1314-C
Manual	Equalizing	AKAM0001

VS-1314-C

AKAM0001

Dump Valves

Hendrickson offers a wide variety of dump valve kits. Dump valves are typically used to exhaust the air from the suspension during loading and unloading. Exhausting the suspension helps prevent trailer walk, provides increased stability and lowers the trailer deck height.

Manual Dump Valves

- Rated for -40° F to 180° F
- Highly tolerant to contamination and chemicals
- Anodized aluminum construction for superior corrosion resistance and strength
- Stainless steel shaft for better wear and corrosion resistance
- Protected vent prevents contamination from entering the valve

Box Type			Auto Reset		Liquid Gauge		Part Number
None	Polycarbonate	Stainless Steel	Without	With	Without	With	
	X		X		X		AKEM1007-1
	X		X			X	AKEM1007-2
	X			X	X		AKER1004-1
	X			X		X	AKER1004-2
		X	X		X		AKEM2006-1
		X	X			X	AKEM2006-2
		X		X	X		AKER2003-1
		X		X		X	AKER2003-2
X			X	X	X		AKEM0005-1[1]
X			X	X	X		AKEM0005-2[1, 2] (Includes auto dump)

[1] Can be used as an auto-reset valve by removing the vent protector.

[2] Provides a manual dump control and a remote auto reset dump that is activated by the trailer parking brakes.

Manual Dump Valves

AKEM0005-1

AKER1004-2

AKEM2006-2

AKER2003-1

Automatic / Specialty Dump Valves

Description	Box Type		Valve Type			Auto Reset		Compatible with SURELOK®		Part Number
	None	Polycarbonate	Manual	Electric	Auto	Without	With	Yes	No	
Ball Valve	X		X			X			X	AK-147-1
Ball Valve		X	X			X			X	AKEM1008
Solenoid Valve	X			X		X			X	AK-53
Auto Dump	X				X		X		X	AK-54
Integral Auto Dump	X				X		X		X	AKHD-XXX[1]

[1] Automatic dump feature is integrated into the height control valve. Reference the Height Control Valve section for specific kit numbers.

AK-53

AK-54

AK-147-1

Aftermarket

Description	Dump Valve Model	Part Number
Replacement Polycarbonate Enclosure	AKEM1007-1, AKEM1007-2	VS-31335
Replacement Polycarbonate Enclosure	AKER1004-1, AKER1004-2	VS-31325
Replacement Stainless Steel Enclosure	AKEM2006-1, AKEM2006-2 AKER2003-1, AKER2003-2	VS-31320
Replacement Mounting Bracket	AKEM0005-1, AKEM0005-2	VS-30427

QUIK-DRAW® Pneumatic Pin-Pull Mechanism

Hendrickson's VANTRAAX® and INTRAAX® SP air suspension slider systems come standard with the QUIK-DRAW® pneumatic pin-pull mechanism. Triggered with a simple pull of a knob, it applies continuous pressure until the pins release. Pins automatically reset with the release of the emergency brake. For instances when additional features are required and an enclosure is preferred, a variety of QUIK-DRAW kits are also available.

- Only completely pneumatic pin-pull mechanism on the market
- Enhanced driver productivity and satisfaction
- Tested to meet stringent durability and environmental conditions — operating in temperatures to -40 degrees.

QUIK-DRAW Valves

Box Type		Auto Reset		Dump Feature		Liquid Gauge		SURELOK® Bypass	Part Number
Polycarbonate	Stainless Steel	Without	With	Without	With	Without	With		
X			X	X		X			AKQD1008
X			X[1]		X	X			AKQD1009[1]
X			X[1]		X		X		AKQD1010[1]
X			X[1]		X	X		X	AKQD1011[1]
	X		X[1]		X	X			AKQD2006[1]

[1] Auto reset function resets the QUIK-DRAW valve only, not the manual dump.

AKQD1008

AKQD1011

Aftermarket

Description	Product Family	Part Number	Notes
3-way Auto Reset Valve, No Fittings	VANTRAAX®, ULTRAA-K®, INTRAAX® SP	VS-25223	
3-way Auto Reset Valve, Straight Fittings	VANTRAAX, ULTRAA-K, INTRAAX SP	VS-25224	Valve Assembly Only
	ULTRAA-K	VS-33759	Valve Assembly with Bracket
3-way Auto Reset Valve, Straight and Tee Fittings	VANTRAAX	VS-29866	
	ULTRAA-K	VS-34932	Valve Assembly Only
		VS-33760	Valve Assembly with Bracket
Replacement Polycarbonate Enclosure	AKQD1008, AKQD1009, AKQD1010	VS-31845-4	
	AKQD1011	VS-31845-6	

VS-25223

VS-25224

VS-29866

SURELOK®

Hendrickson's SURELOK features locking legs that provide maximum engagement with the suspension beam. Designed for the customer who must maintain ride height during loading and unloading, SURELOK automatically engages when the trailer's parking brakes are set. SURELOK is an available option on VANTRAAX® air suspension slider systems or can be purchased separately for use in a variety of other Hendrickson suspensions. For instances when additional features are required and an enclosure is preferred, a variety of SURELOK controls are also available.

- Maintains ride height during loading / unloading for efficient trailer dock operations
- Eliminates trailer walk by limiting vertical and horizontal movement

SURELOK Controls

Polycarbonate Box	Auto Reset		Dump Feature		Liquid Gauge		SURELOK Bypass	Part Number
	Without	With	Without	With	Without	With		
X	X		X		X		X	AKSL1002
X	X			X	X		X	AKSL1003
X		X		X	X		X	AKSL1004
X		X		X		X	X	AKSL1004-1

AKSL1002

AKSL1004-1

Aftermarket

Description	SURELOK Model	Part Number
Replacement Polycarbonate Enclosure	AKSL1002	VS-31845-7
	AKSL1003	VS-31845-2
	AKSL1004	VS-31845-8
	AKSL1004-1	VS-31845-9

Single Axle Dump System

Hendrickson's single axle dump system gives operators an effective solution to improve low speed maneuverability. Under certain conditions, it will allow the operator to exhaust the air from one suspension. The system automatically monitors trailer speed and only activates at speeds less than 10 mph. Requires upgraded ABS valve ECU with applicable software. (Supplied by ABS manufacturer.)

- Provides fast exhaust without the need for an additional relay valve — dumps in less than 2 seconds
- Consumes less air than other relay valve systems
- Utilizes Hendrickson's patented speed-control reset
- Successfully passed rigorous environmental testing and operates effectively at -40 degrees
- Effectively exhausts air springs under all loading conditions including lightly loaded trailers with low air spring pressures
- Hendrickson approved — speed limiting feature maintains Hendrickson's suspension and wheel-end warranty

Single Axle Dump System

Single Axle Dump Valve

ABS Compatibility	Part Number
Wabco	AKES0001
Bendix	AKES0002
Haldex	AKES0003

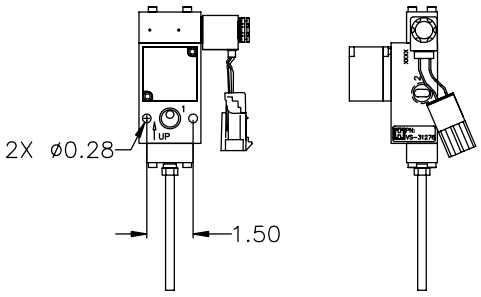

Rear Axle Dump Valve

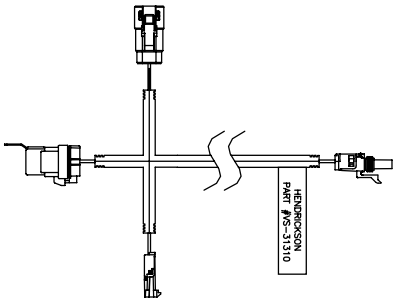

System Harness

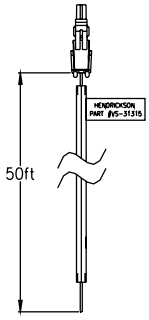

Actuation Harness

NOTE: Requires application approval from Hendrickson.

TIREMAAX® CONTROLLERS

PRO CONTROLLER ASSEMBLY

CP CONTROLLER ASSEMBLY
(Tank valve shown separately)

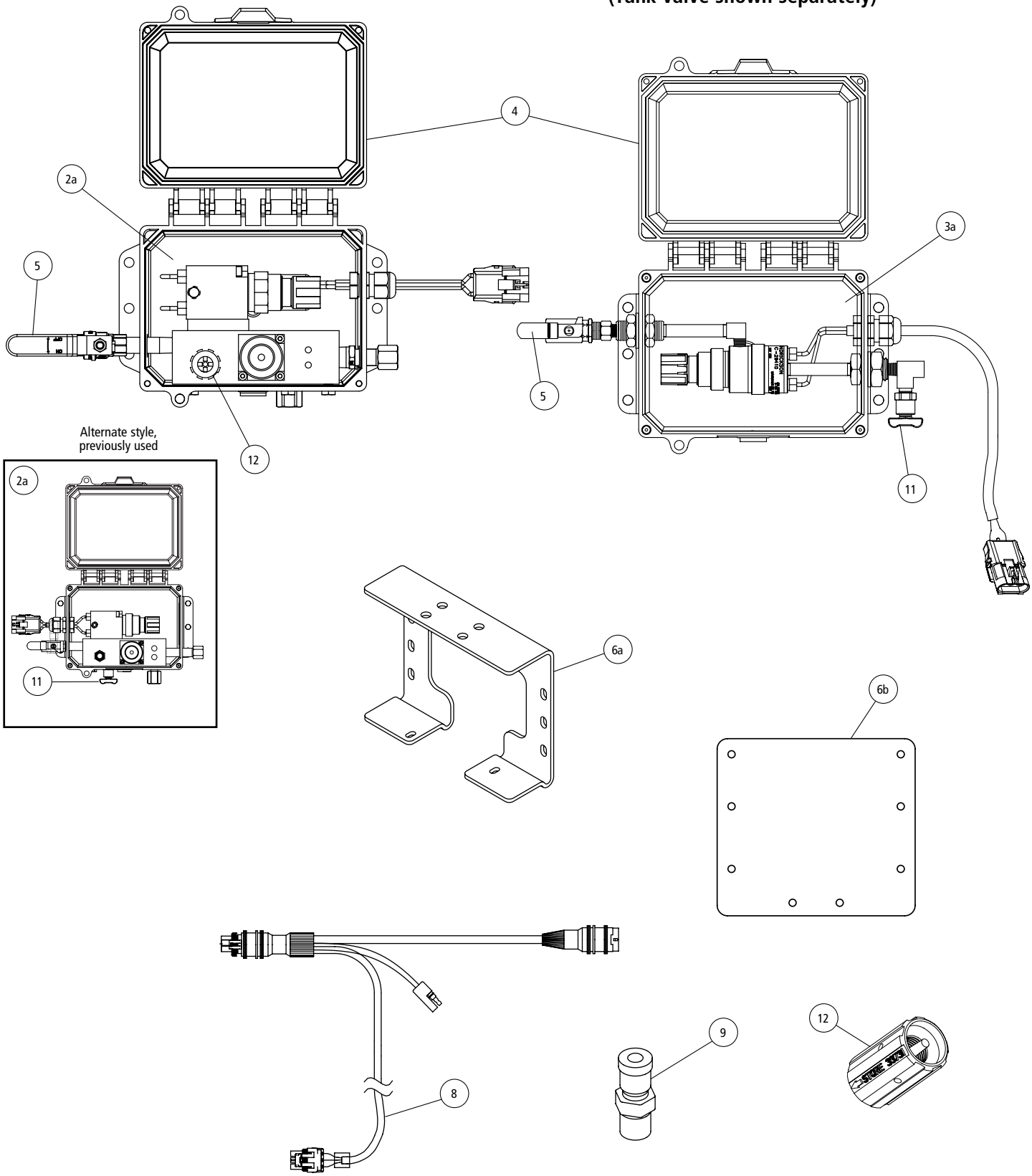

TIREMAAX® CONTROLLERS

ITEM	DESCRIPTION
1	**CONTROLLER KIT** (Complete kit not shown) **Available as assembled unit only**

Model	Wheel Style	PSI Range
TIREMAAX® PRO	Dual and Super Single	85 to 120
TIREMAAX CP	Dual and Super Single	70 to 120

Offered in 5 psi increments.

VS-6 _ _ _ PRO - _

- Pressure Setting
- Controller Type
  PRO = TIREMAAX PRO
  CP = TIREMAAX CP
- See Chart

Example: Pro Controller Kit part number VS-6100PRO-1 is 100 psi with adapter plug, no indicator light and no controller tank valve.

Controller Kit		-1	-2	-3	-4	-5	-6	-7	-8	-9	-10	-11	-12	-13	-14	-15
Indicator Light Kit	Incandescent – 12V							X		X	X					
	No	X	X	X	X	X	X									
	LED – 12V with 65' Cable								X			X	X			
	LED – 12V with 35' Cable													X	X	X
Wiring Harness	Adapter Plug	X			X					X		X			X	
	15' Heavy Duty		X			X		X	X					X		
	3' Heavy Duty			X			X				X		X			X
Controller Tank Valve	Yes*				X	X	X									
	No	X	X	X				X	X	X	X	X	X	X	X	X

*Not available on TIREMAAX PRO.

ITEM	DESCRIPTION	PART NO.	QTY. PER TANDEM	NOTE
2	**PRO CONTROLLER ASSEMBLY**			Available as assembled unit only
	a PRO Controller with Delphi Connector	VS-32074-XXX	1	Programmed to XXX psi
	b PRO Controller with Blade Terminals (Not Shown)	VS-34923-XXX	1	Programmed to XXX psi
3	**CP CONTROLLER ASSEMBLY**		1	Available as assembled unit only
	a CP Controller with Delphi Connector	VS-29865-XXX	1	Programmed to XXX psi
	b CP Controller with Delphi Connector and Tank Valve	VS-31520-XXX	1	Programmed to XXX psi
	c CP Controller with Blade Terminals (Not Shown)	VS-34920-XXX	1	Programmed to XXX psi
	d CP Controller with Blade Terminals and Tank Valve (Not Shown)	VS-37987-XXX	1	Programmed to XXX psi
4	**PRO AND CP CONTROLLER LID**	VS-34953	1	
5	**BALL VALVE**	VS-33730	1	
6	**MOUNTING BRACKET**			
	a For Spring Suspensions	VS-29859	1	Optional
	b For ULTRAA-K® Suspension	VS-35291	1	Optional for mounting to front crossmember
7	**ADAPTER PLUG** (Not Shown)	VS-29857	1	18-inch; 3-way connector
8	**ABS JUNCTION HARNESS**			
	a 15-foot; 3-way Connector	VS-30270	1	
	b 3-foot; 3-way Connector	VS-30270-1	1	
9	**TANK VALVE**	VS-31519	1	Optional on CP
10	**LIQUID-FILLED PRESSURE GAUGE (Not Shown)**	VS-31498	1	Optional on PRO
11	**PETCOCK**	VS-29409	1	On PRO models prior to February 2015
12	**TEST PORT VENT**	VS-33731	1	On PRO models after February 2015

TIREMAAX® LIGHT KIT COMPONENTS AND MANIFOLDS

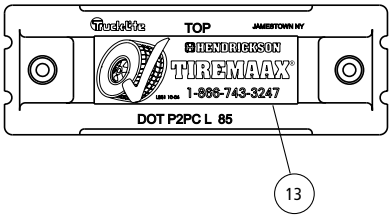

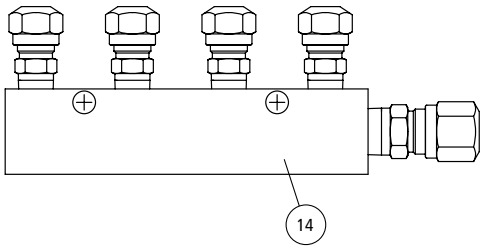

TIREMAAX AXLE AND WHEEL COMPONENTS

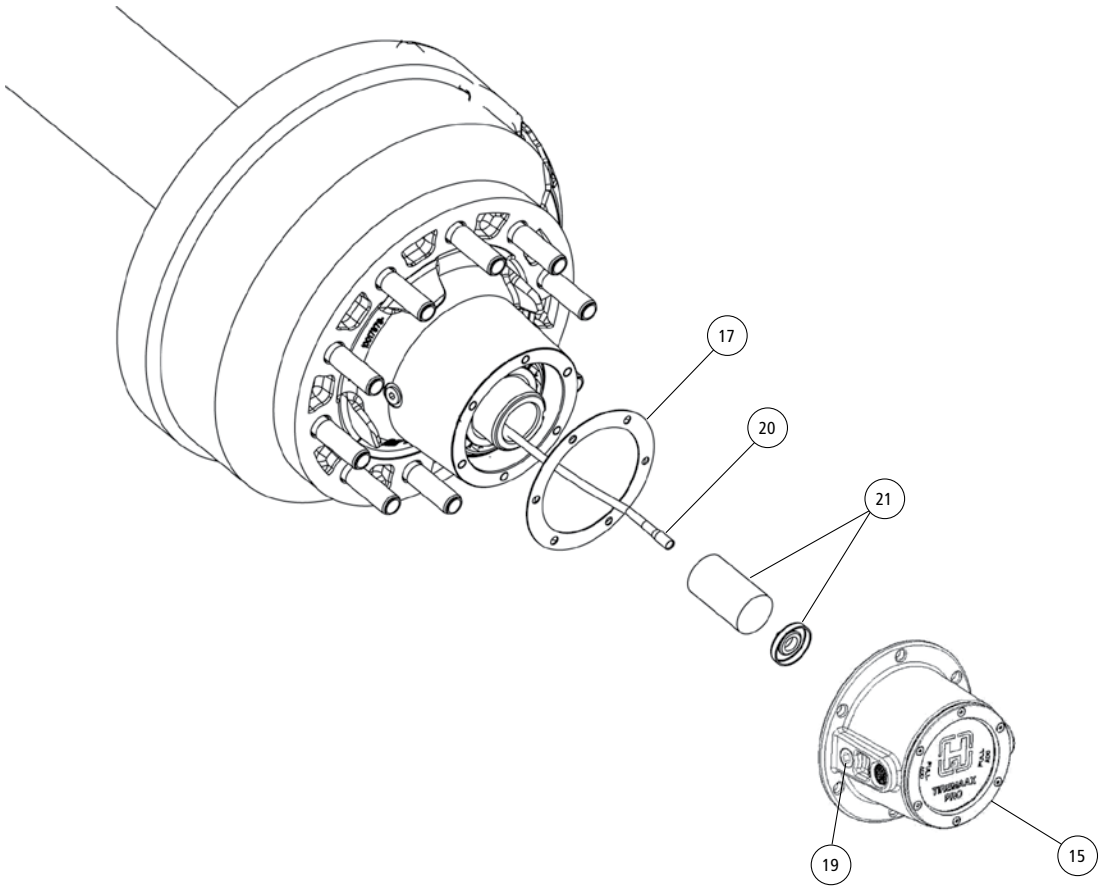

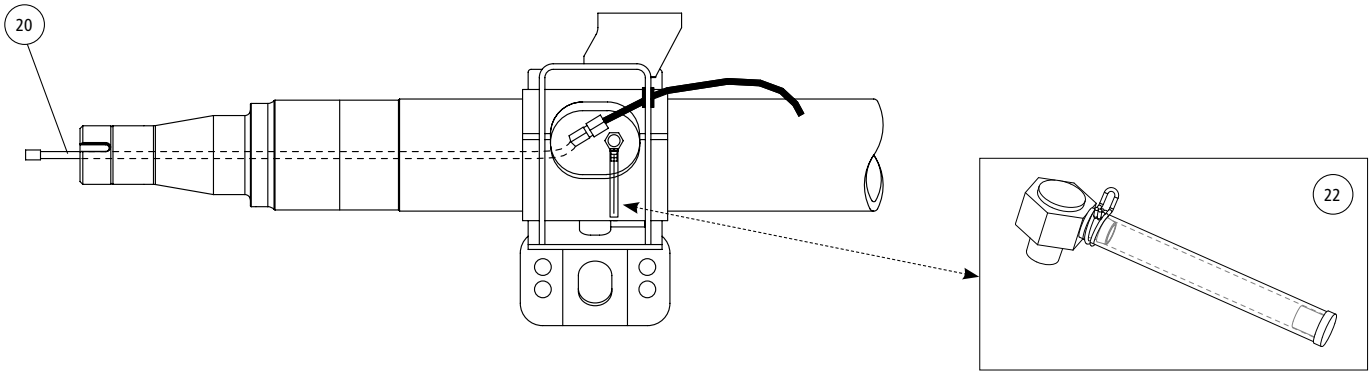

TIREMAAX® LIGHT KIT COMPONENTS AND MANIFOLDS

ITEM	DESCRIPTION	PART NO.	QTY. PER TANDEM	NOTE
13	**TRAILER MOUNTED INDICATOR LIGHT KIT** (Complete Kit Not Shown)			
	a Kit – Incandescent 12V with 60-foot Cable	VS-28059	1	Light, gasket, ground wire and 60-foot cable
	b Kit – LED 12V with 65-foot Cable	VS-28059-1	1	Light, bracket and 65-foot cable
	c Kit – LED 12V with 35-foot Cable	VS-28059-3	1	Light, bracket and 35-foot cable
	d Kit – LED 24V with 65-foot Cable	VS-28059-2	1	Light, bracket and 65-foot cable
	e Light – Incandescent 12V	VS-28526	1	Light only
	f Light – LED 12V	VS-29880	1	Light only
	g Light – LED 24V	VS-33119	1	Light only
	h Cable – Incandescent 12V, 60-foot	VS-28336	1	Cable only
	i Cable – LED, 65-foot	VS-29883	1	Cable only
	j Cable – LED, 35-foot	VS-29883-1	1	Cable only
14	**MANIFOLD**			
	a Tandem Manifold	VS-30410	1	
	b Tridem Manifold	VS-30470	1	

TIREMAAX AXLE AND WHEEL COMPONENTS

15	**HUBCAP**			Hubcap, gasket and fasteners
	a PRO HN Oil - Dual/Super Single Tires	VS-32055-1	4	
	b PRO HN Grease - Dual/Super Single Tires	VS-32055-3	4	
	c PRO HP Oil - Dual/Super Single Tires	VS-32056-1	4	
	d PRO HP Grease - Dual/Super Single Tires	VS-32056-3	4	
	e CP HN Oil - Dual/Super Single Tires	VS-32068-1	4	
	f CP HN Grease - Dual/Super Single Tires	VS-32068-3	4	
	g CP HP Oil - Dual/Super Single Tires	VS-32070-1	4	
	h CP HP Grease - Dual/Super Single Tires	VS-32070-3	4	
	i PRO Extended HP Oil - Dual / Super Single Tires	VS-32057-1	4	For use with castellated nut
	j PRO Extended HP Grease - Dual / Super Single Tires	VS-32057-3	4	For use with castellated nut
16	**HUBCAP WINDOW REPLACEMENT KITS** (Not Shown)			Hubcap lens, lens plate, tri-lobe screws
	a CP Oil	VS-32054-1	4	
	b CP Grease	VS-32054-2	4	
	c PRO Oil	VS-32054-3	4	
	d PRO Grease	VS-32054-4	4	
17	**HUBCAP GASKETS**			
	a HP Gasket	S-32097	4	
	b HN Gasket	S-32098	4	
18	**HUBCAP PORT PROTECTION PLUG** (Not Shown)			For super single applications
	a PRO AND CP (Purchased after 09/01/2013)	VS-33686	4	Light grey, permanent threaded nylon plug
19	**HUBCAP FILL PORT PIPE PLUG**	SA-2300-3	4	
20	**AXLE HOSE**			
	a INTRAAX®/VANTRAAX®	VS-32087-1	4	Requires (1) axle vent VS-32101 per axle
	b TRLAXLE®, 71.5" to 83" track	VS-32087-2	4	Requires (1) axle vent VS-32101-1 per axle
	c TRLAXLE, 83.5" to 92" track	VS-32087-3	4	Requires (1) axle vent VS-32101-1 per axle
	d CONNEX® ST	VS-32087-4	4	Requires (1) axle vent VS-32101 per wheel-end
21	**SPINDLE PLUG ASSEMBLY**			
	a HN - 1.75"	VS-33092-1	4	
	b HUS/P90 and HP - 2.75"	VS-33092-2	4	
22	**AXLE VENT**			
	a INTRAAX/VANTRAAX	VS-32101	2	
	b TRLAXLE	VS-32101-1	2	
23	**AXLE KIT** (Not Shown)			Axle hoses, filters, vent assembly, spindle plugs and air line tubing
	a INTRAAX/VANTRAAX	VS-9201TM	2	
	b TRLAXLE, 71.5" to 83" track	VS-9202TM	2	
	c TRLAXLE, 83.5" to 92" track	VS-9204TM	2	

TIREMAAX® TIRE HOSES

ITEM	DESCRIPTION	PART NO.	QTY. PER TANDEM	NOTE
24	**TIRE HOSE – STRAIGHT FITTING**	See Chart A		
25	**TIRE HOSE – 180-DEGREE FITTING**	See Chart A		
26	**TIRE HOSE KITS** (Individual Components Shown)	See Chart B		
27	**TIRE HOSE O-RING SERVICE KIT** (Not Shown)	VS-34935	2	(10) O-rings per kit

CHART A – TIRE HOSES

ITEM	WHEEL STYLE	TIRE SIZE	WHEEL MATERIAL	POSITION	FITTING	QTY. PER TANDEM	PART NUMBER	
							THERMOPLASTIC	STAINLESS STEEL
24 & 25	Dual	17.5"	Steel, Aluminum or Combo	Inner	Straight	4	VS-33767-4	VS-31503-2
				Outer	180-Degree	4	VS-33769-3	VS-31504-1
		19.5"	Aluminum	Inner	Straight	4	VS-33767-4	VS-31503-2
				Outer	180-Degree	4	VS-33769-1	VS-31504-1
			Steel or Combo	Inner	Straight	4	VS-33767-2	VS-31503-2
				Outer	180-Degree	4	VS-33769-3	VS-31504-1
		22.5"	Aluminum	Inner	Straight	4	VS-33767-5	VS-31503-2*
				Outer	180-Degree	4	VS-33769-1	VS-31504-1*
			Steel or Combo	Inner	Straight	4	VS-33767-1	VS-31503-1
				Outer	180-Degree	4	VS-33769-1	VS-31504-2
		24.5"	Aluminum	Inner	Straight	4	VS-33767-2	VS-31503-1
				Outer	180-Degree	4	VS-33769-2	VS-31504-2
			Steel or Combo	Inner	Straight	4	VS-33767-1	VS-31503-1
				Outer	180-Degree	4	VS-33769-1	VS-31504-2
	Super Single	22.5"	Aluminum	N/A	Straight	4	VS-33767-3	VS-31503-3
			Steel	Outboard Stem	180-Degree	4	VS-33769-1	VS-31504-1
				Inboard Stem	Straight	4	VS-33767-3	VS-31503-3

* Part number listed may not match part number found on the stainless steel tire hose ID label. The part number listed above provides an optimal length for the 22.5" aluminum wheel set-up. Customer can replace like-for-like or order the part number above, which will be approximately one inch shorter.

CHART B – TIRE HOSE KITS

ITEM	WHEEL STYLE	TIRE SIZE	WHEEL MATERIAL	THERMOPLASTIC PART NUMBER	QTY. PER TANDEM	NOTE
26	Dual	17.5"	Steel, Aluminum or Combo	VS-8301TM	2	(2) Straight and (2) 180-degree thermoplastic tire hoses
		19.5"	Aluminum	VS-8302TM	2	(2) Straight and (2) 180-degree thermoplastic tire hoses
			Steel or Combo	VS-8303TM	2	
		22.5"	Aluminum	VS-8304TM	2	(2) Straight and (2) 180-degree thermoplastic tire hoses
			Steel or Combo	VS-8305TM	2	
		24.5"	Aluminum	VS-8306TM	2	(2) Straight and (2) 180-degree thermoplastic tire hoses
			Steel or Combo	VS-8305TM	2	
	Super Single	22.5"	Aluminum	VS-8307TM	2	(2) Straight thermoplastic tire hoses
			Steel (Outboard Stem)	VS-8308TM	2	(2) 180-degree thermoplastic tire hoses
			Steel (Inboard Stem)	VS-8307TM	2	(2) Straight thermoplastic tire hoses

TIREMAAX® CONTROLLERS

ITEM	DESCRIPTION	PART NO.	QTY. PER TANDEM	NOTE
1	EC to CP Retrofit Kit		1	

Model	PSI Range
TIREMAAX® EC	70 to 130

Offered in 5 psi increments.

VS-5 _ _ _ S-1

- Pressure Setting
- Tire Type: S= Super Single, D= Dual
- Harness Type: 1 = CP Adapter Plug, 2 = ABS Junction Harness

Example: Conversion Kit Part Number VS-5100S-1 is 100 psi for Super Single with CP Adapter Plug.

ITEM	DESCRIPTION	PART NO.	QTY. PER TANDEM	NOTE
2	EC Controller Assembly			No longer available — replace with item 1
3	EC Adapter Plug	VS-27771	1	18-inch; 4-way connector
4	EC ABS Junction Harness	VS-29884	1	15-foot; 4-way connector

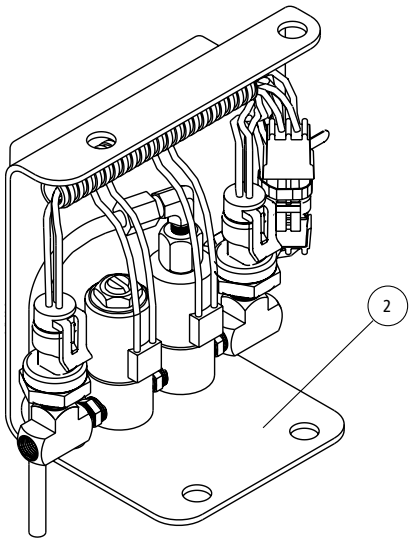

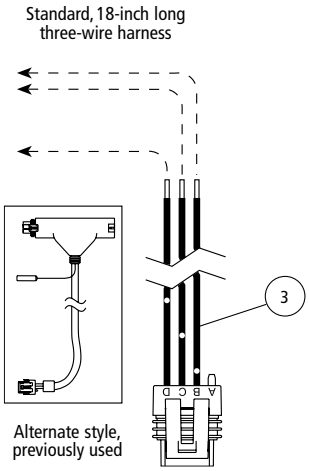

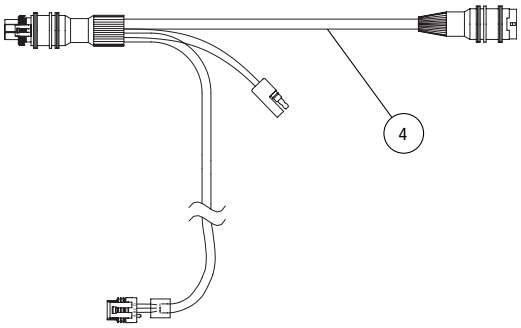

TIREMAAX® AXLE AND WHEEL COMPONENTS

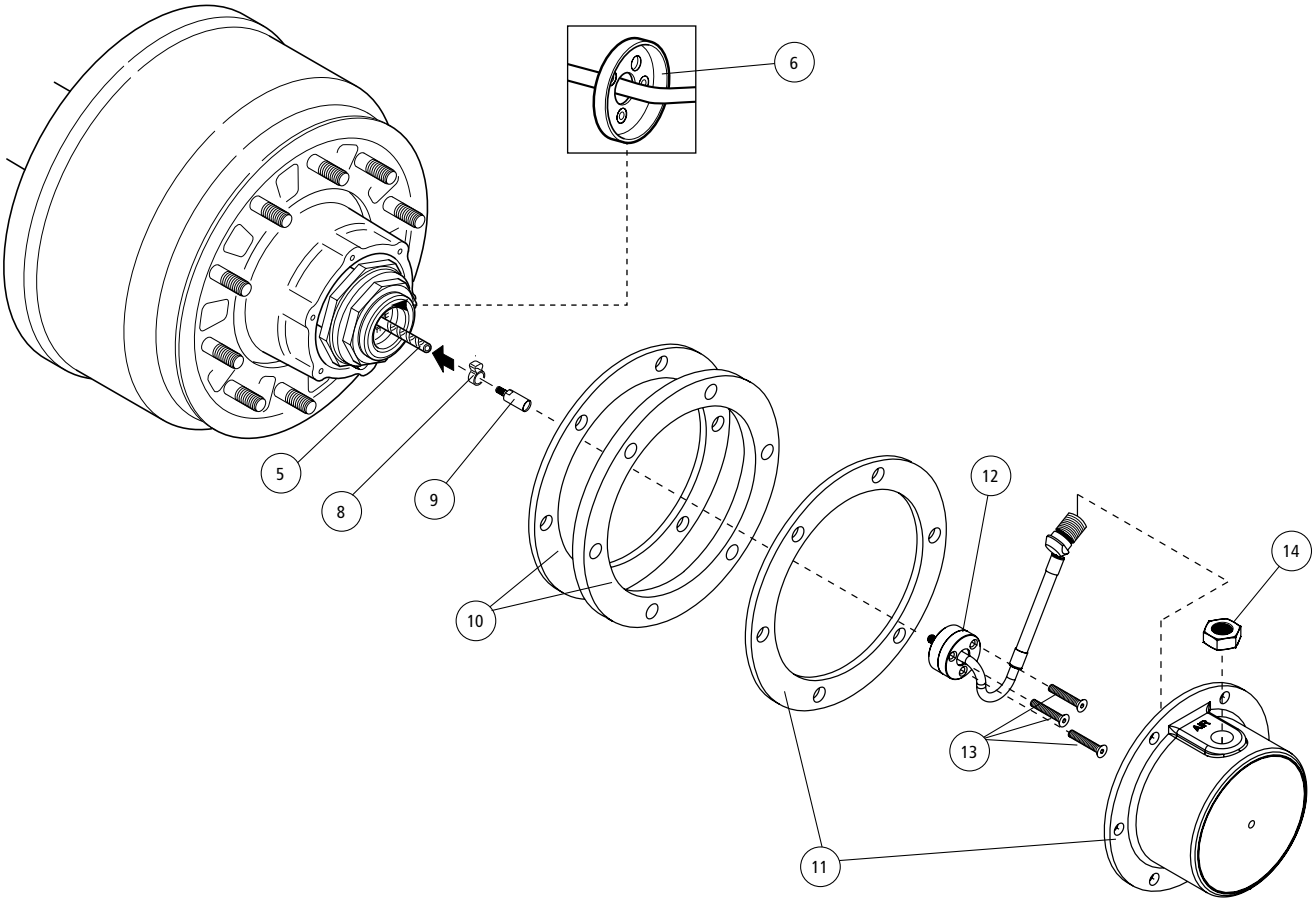

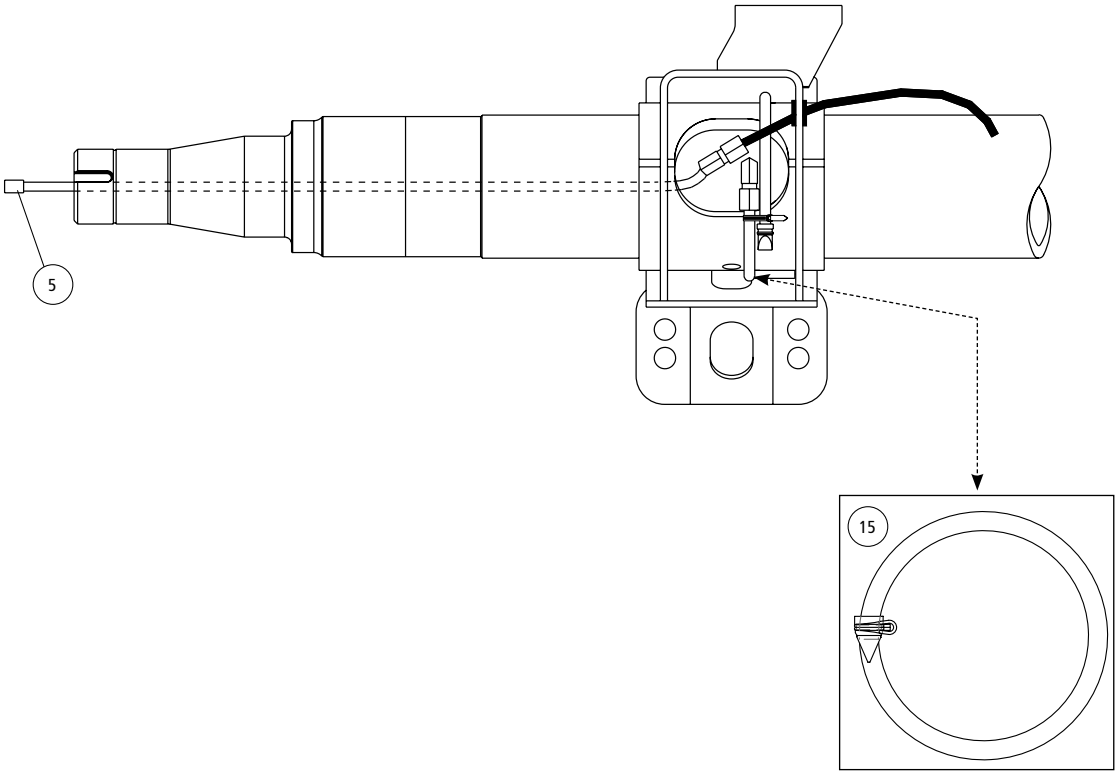

TIREMAAX® AXLE AND WHEEL COMPONENTS

ITEM	DESCRIPTION	PART NO.	QTY. PER TANDEM	NOTE
5	**AXLE HOSE**			
	a INTRAAX® / VANTRAAX®	VS-29094-1	4	
	b TRLAXLE®	VS-29094-2	4	
6	**SPINDLE PLUG ASSEMBLY**			
	a HN® - 1.75"	VS-27448	4	
	b HP - 2.50"	VS-27839	4	
	c HUS / P90 and HP - 2.75"	VS-27449	4	
7	**AXLE FILTER** (Not Shown)	A-24217	4	
8	**AXLE HOSE CLAMP**	VS-26451	4	Not required with threaded axle hose
9	**HOSE END ADAPTER**	VS-28865	4	Axle hose fitting and (2) axle hose clamps
10	**HUBCAP SPACER KIT**			
	a HN Hubcap Spacer Kit	S-28040	4	
	b HP Hubcap Spacer Kit	S-28093	4	
11	**HUBCAP**			
	a HN Grease - Standard	VS-29566-1	4	Bolt-on hubcap, gasket and fasteners
	b HN Oil - Standard	VS-29566-3	4	Bolt-on hubcap, gasket and fasteners
	c HP Grease - Standard	VS-29566-2	4	Bolt-on hubcap, gasket and fasteners
	d HP Oil - Standard	VS-29566-4	4	Bolt-on hubcap, gasket and fasteners
	e HUS / P90 Screw-on	VS-29566-5	4	Screw-on hubcap with integrated o-ring
	f HUS / P90 6-bolt	VS-29566-2	4	Bolt-on hubcap, gasket and fasteners
	g HUS / P90 3-bolt	S-29227-2	4	Bolt-on hubcap with integrated o-ring
	h HN Grease - Stemco Extended for Pro-Torq® Nut	(No Longer Available)		Replaced by 11a and 10a
	i HP Grease - Stemco Extended for Pro-Torq Nut	(No Longer Available)		Replaced by 11c and 10c
	j HN Oil - Stemco Extended for Pro-Torq Nut	(No Longer Available)		Replaced by 11b if using standard 3 piece spindle nut
	k HP Oil - Stemco Extended for Pro-Torq Nut	VS-31293	4	Bolt-on hubcap and gasket
12	**ROTARY UNION KITS**			
	a No Spindle Plug	S-28622	4	(1) rotary union assembly, (1) hose clamp, (4) machine screws, (1) hose end adapter and (1) jam nut
	b HN Spindle Plug	S-28192	4	(1) rotary union assembly, (1) 1.75" spindle plug, (1) hose clamps, (4) machine screws, (1) hubcap gasket, (1) hose end adapter and (1) jam nut
	c HP and HUS / P90 Spindle Plug	S-28193	4	(1) rotary union assembly, (1) 2.75" spindle plug, (1) hose clamps, (4) machine screws, (1) hubcap gasket, (1) hubcap o-ring, (1) hose end adapter and (1) jam nut
13	**COUNTERSUNK CAP SCREW**	SA-8200-8	12	Order (3) per rotary union
14	**JAM NUT**	VS-26487	4	
15	**AXLE VENT KIT W/ DUCK BILL CHECK**	VS-27378	4	

TIREMAAX® TIRE HOSES

ITEM	DESCRIPTION	PART NO.	QTY. PER TANDEM	NOTE
16	**TIRE HOSE - 180-DEGREE FITTING**			
	a Stainless Steel Tire Hose 11.5"	VS-29004-1	4	Dual tire size 17" - 19.5"
	b Stainless Steel Tire Hose 15"	VS-29004-2	4	Dual tire size greater than 19.5"
17	**TIRE HOSE - STRAIGHT FITTING**			
	a Stainless Steel Tire Hose 16.6"	VS-29003-1	4	Dual tire size greater than 17"; Super single tire size 22.5"
18	**TEE FITTING**	VS-29854	4	For dual tires
19	**90-DEGREE ELBOW FITTING**	VS-30002	4	For super single tires
20	**TEE FITTING GUARD**			
	a HN and HP, Standard Bolt-On	VS-27890	4	For use with dual dynamic hubcaps
	b HN and HP, Extended Bolt-On (Not Shown)	VS-30451	4	For use with Stemco extended hubcaps
	c HUS Bolt-on	S-28914	4	6 bolts

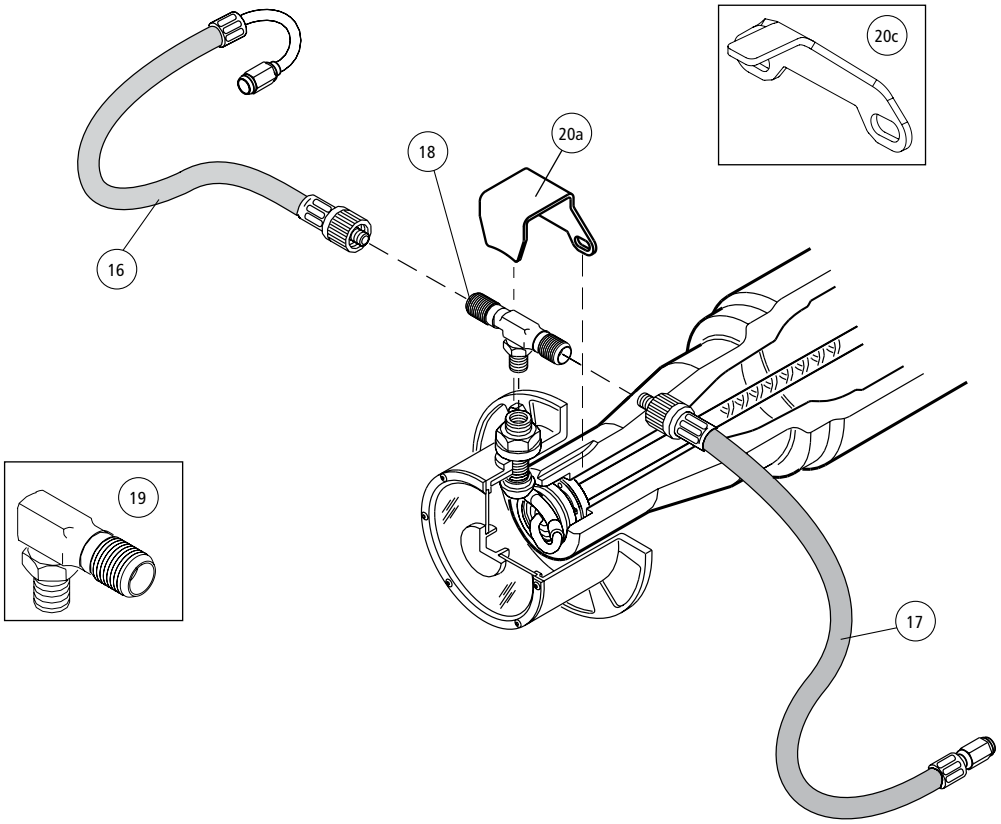

TIREMAAX® TOOLS / ACCESSORIES

ITEM	DESCRIPTION	PART NO.	QTY.	NOTE
1	**PLUG DRIVER**			
	a HN (1.75")	S-28146-1	1	
	b HP (2.50")	S-28146-2	1	
	c HP and HUS®/ P90 (2.75")	S-28146-3	1	
	d Driver Handle	S-27399	1	
2	**SPANNER WRENCH**	S-29430	1	
3	**TARGET GAUGE**			
	a PRO	VS-32331	1	
	b CP with Hubcap-Mounted Rotary Union	VS-32344	1	
	c CP with Spindle-Mounted Rotary Union	VS-30468	1	
4	**BLANK PSI DECAL**	T50015	1	Fill in and adhere to controller lid after resetting cold tire pressure
5	**PRESSURE TESTER**	VS-28707	1	For EC controller
6	**TIRE HOSE / WHEEL GROMMET** (Not Shown)			
	a 1.5" Hand Hole with Offset Valve Stem	VS-33675	2	(2) Grommets per kit
	b 2.0" Hand Hole with Centered Valve Stem	VS-33107	2	(2) Grommets per kit
	c 2.5" Hand Hole with Centered Valve Stem	VS-33108	2	(2) Grommets per kit
	d 2.5" Hand Hole with Offset Valve Stem	VS-33109	2	(2) Grommets per kit

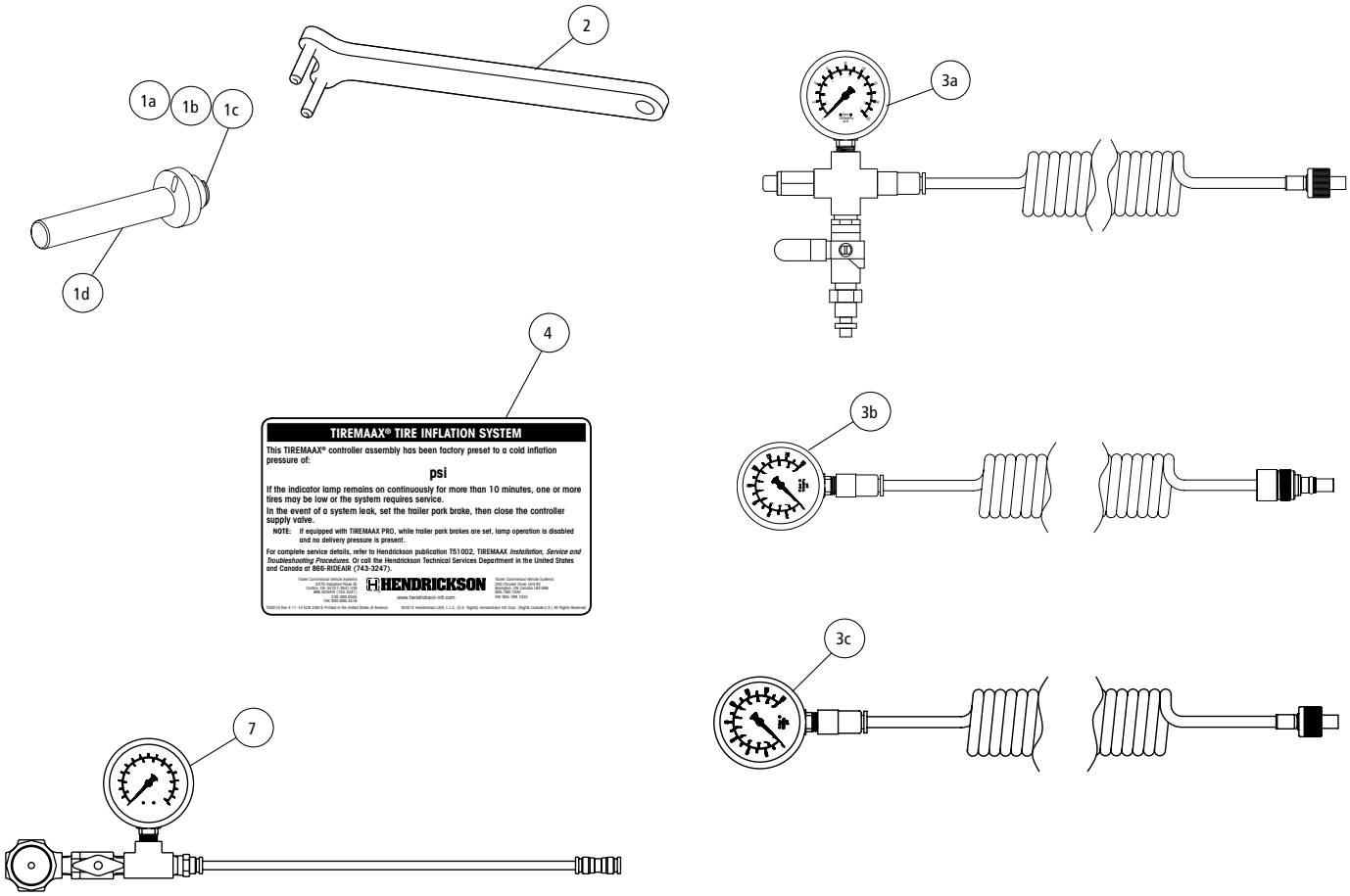

Drum Brake Components

★	**Brake Shoe Kits Contain:** (2) lined brake shoes, (2) brake shoe rollers, (2) roller spring clips and (2) return spring pins
▲	**Major Overhaul Brake Shoe Kits Contain:** (2) lined brake shoes, (2) brake shoe rollers, (2) roller spring clips, (2) return spring pins (2) anchor pins, (2) anchor pin bushings, (1) brake return spring and (2) brake retaining springs
■	**Minor Overhaul Hardware Kits Contain:** (2) brake shoe rollers, (2) roller spring clip, (2) return spring pins, (2) anchor pins, (2) anchor pin bushings, (1) brake return spring and (2) brake retaining springs
†	**Brake Conversion Kits without S-cams Contain:** (4) lined brake shoes, (4) brake shoe rollers, (4) roller spring clips, (4) return spring pins and (2) HXS brake return springs
✦	**Brake Conversion Kits with S-cams Contain:** (4) lined brake shoes, (4) brake shoe rollers, (4) roller spring clips, (4) return spring pins, (2) HXS brake return springs, (1) S-cam left, (1) S-cam right and (2) underhead cam washers

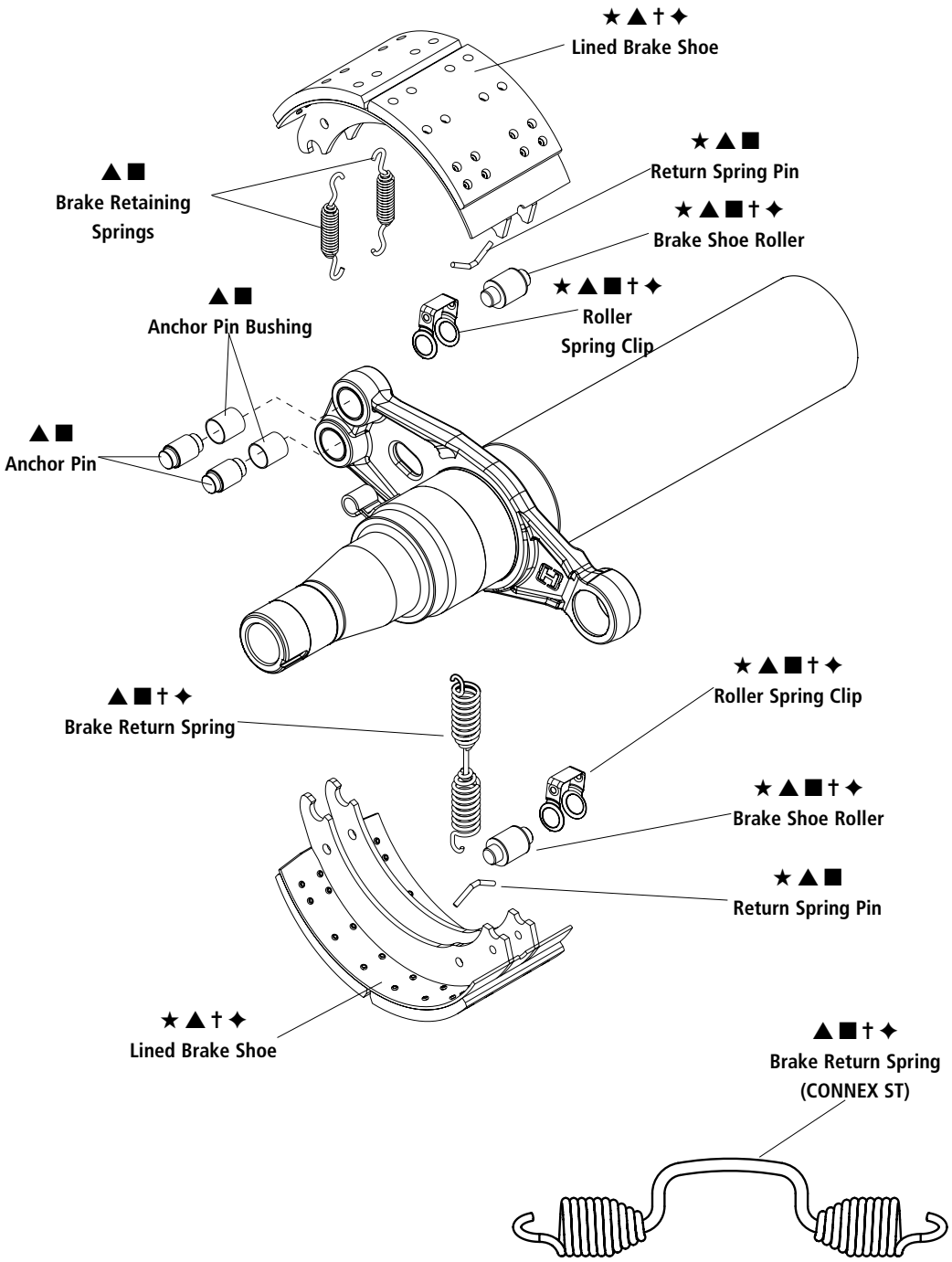

BRAKE KITS (Original Equipment Linings) (INTRAAX®, VANTRAAX® and TRLAXLE®)

LINING	FMSI	SIZE	SERVICE TYPE	★ BRAKE SHOE KIT	▲ MAJOR OVERHAUL BRAKE KIT	■ MINOR OVERHAUL HARDWARE BRAKE KIT	† BRAKE CONVERSION TO HXS® w/out S-CAMS	✦ BRAKE CONVERSION TO HXS w/ S-CAMS
20,000 GAWR	4515	16.5" × 7"	STD	S-21266-1	S-21184-1	S-23752	N/A	N/A
	4692	12.25" × 7.5"	HXS®	S-32486-3	S-31962-3	S-32487-3	N/A	N/A
	4707	16.5" × 7"	HXS	S-23750-1	S-23753-1	S-23752	S-25823-1	S-23756-1
	4710	15" × 8.625"	HXS	S-27808-1	S-27783-1	S-23752	N/A	N/A
	4711	16.5" × 8.625"	HXS	S-23751-1	S-23754-1	S-23752	S-25824-1	S-23757-1
23,000 GAWR	4515	16.5" × 7"	STD	S-21266-8	S-21184-8	S-23752	N/A	N/A
	4707	16.5" × 7"	HXS	S-23750-3	S-23753-3	S-23752	S-25823-3	N/A
	4711	16.5" × 8.625"	HXS	S-23751-3	S-23754-3	S-23752	S-25824-3	N/A
26,000 GAWR	4707	16.5" × 7"	HXS	S-23750-9	S-23753-9	S-23752	S-25823-9	N/A
	4711	16.5" × 8.625"	HXS	S-23751-9	S-23754-9	S-23752	S-25824-9	N/A
ULTRAA 20	4707	16.5" × 7"	HXS	S-23750-2	S-23753-2	S-23752	S-25823-2	N/A
	4711	16.5" × 8.625"	HXS	S-23751-2	S-23754-2	S-23752	S-25824-2	N/A

BRAKE KITS FOR SHOES WITH AAXTREME COAT® (INTRAAX, VANTRAAX and TRLAXLE)

LINING	FMSI	SIZE	SERVICE TYPE	★ BRAKE SHOE KIT w/ AAXTREME-COAT	▲ MAJOR OVER-HAUL BRAKE KIT w/ AAXTREME COAT	† BRAKE CONVERSION TO HXS w/out S-CAMS w/ AAXTREMECOAT	✦ BRAKE CONVERSION TO HXS w/ S-CAMS w/ AAXTREMECOAT
20,000 GAWR	4707	16.5" × 7"	HXS	S-34585-1	S-34586-1	S-34587-1	S-34588-1
	4711	16.5" × 8.625"		S-34589-1	S-34590-1	S-34591-1	S-34592-1
23,000 GAWR	4707	16.5" × 7"	HXS	S-34585-3	S-34586-3	S-34587-3	S-34588-3
	4711	16.5" × 8.625"		S-34589-3	S-34590-3	S-34591-3	S-34592-3
ULTRAA 20	4707	16.5" × 7"	HXS	S-34585-2	S-34586-2	S-34588-2	S-34588-2
	4711	16.5" × 8.625"		S-34589-2	S-34590-2	S-34591-2	S-34592-2

BRAKE KITS (OE Linings) (CONNEX® ST)

LINING	FMSI	SIZE	SERVICE TYPE	★ BRAKE SHOE KIT	▲ MAJOR OVERHAUL BRAKE KIT	■ MINOR OVERHAUL HARDWARE BRAKE KIT	† BRAKE CONVERSION TO HXS w/out S-CAMS	✦ BRAKE CONVERSION TO HXS w/ S-CAMS
20,000 GAWR	4707	16.5" × 7"	HXS	S-23750-1	S-37632-1	S-37633	S-37634-1	S-37635-1
23,000 GAWR	4707	16.5" × 7"	HXS	S-23750-3	S-37632-3	S-37633	S-37634-3	S-37635-3

BRAKE KITS FOR SHOES WITH AAXTREME COAT (CONNEX® ST)

LINING	FMSI	SIZE	SERVICE TYPE	★ BRAKE SHOE KIT w/ AAXTREME-COAT	▲ MAJOR OVER-HAUL BRAKE KIT w/ AAXTREMECOAT	■ MINOR OVERHAUL HARDWARE BRAKE KIT	† BRAKE CONVERSION TO HXS w/out S-CAMS w/ AAXTREME COAT	✦ BRAKE CONVERSION TO HXS w/ S-CAMS w/ AAXTREME COAT
20,000 GAWR	4707	16.5" × 7"	HXS	S-34585-1	S-37636-1	S-37633	S-37637-1	S-37638-1
23,000 GAWR	4707	16.5" × 7"	HXS	S-34585-3	S-37636-3	S-37633	S-37637-3	S-37638-3

CAM SYSTEM (Models shipped before April 2001)

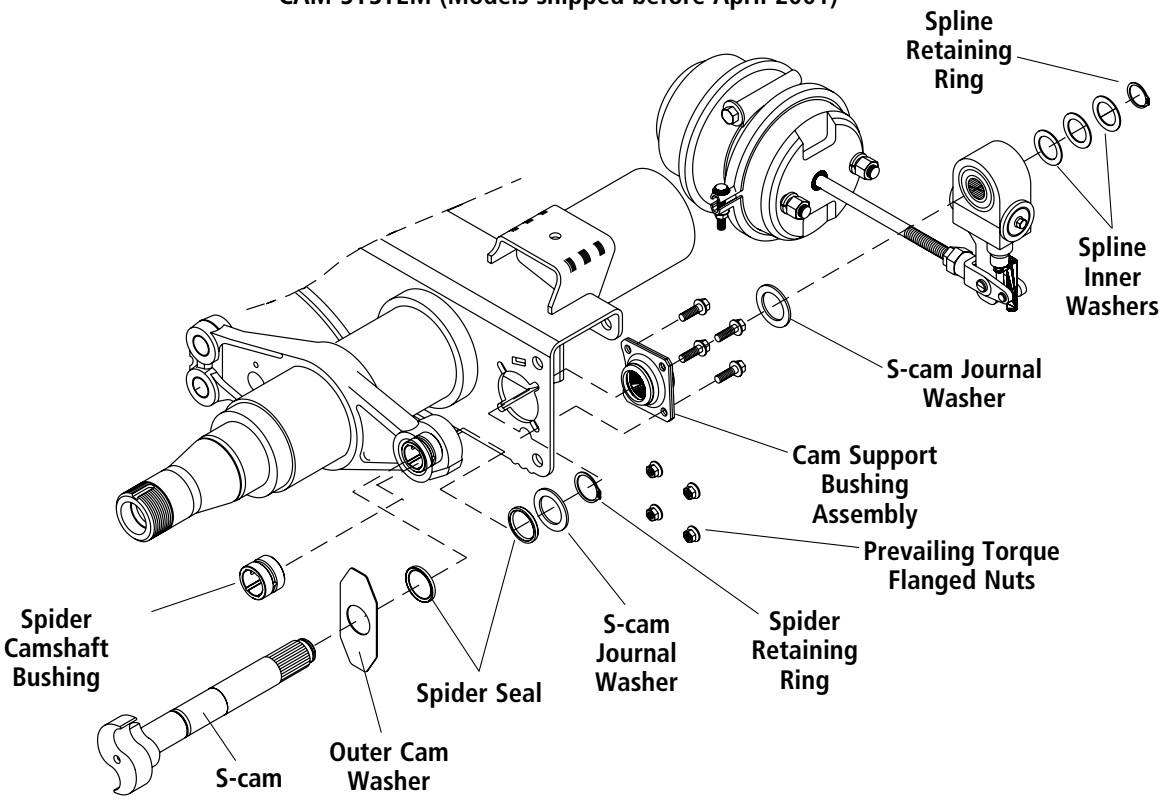

CAM TUBE SYSTEM™ INTRAAX® AND VANTRAAX®

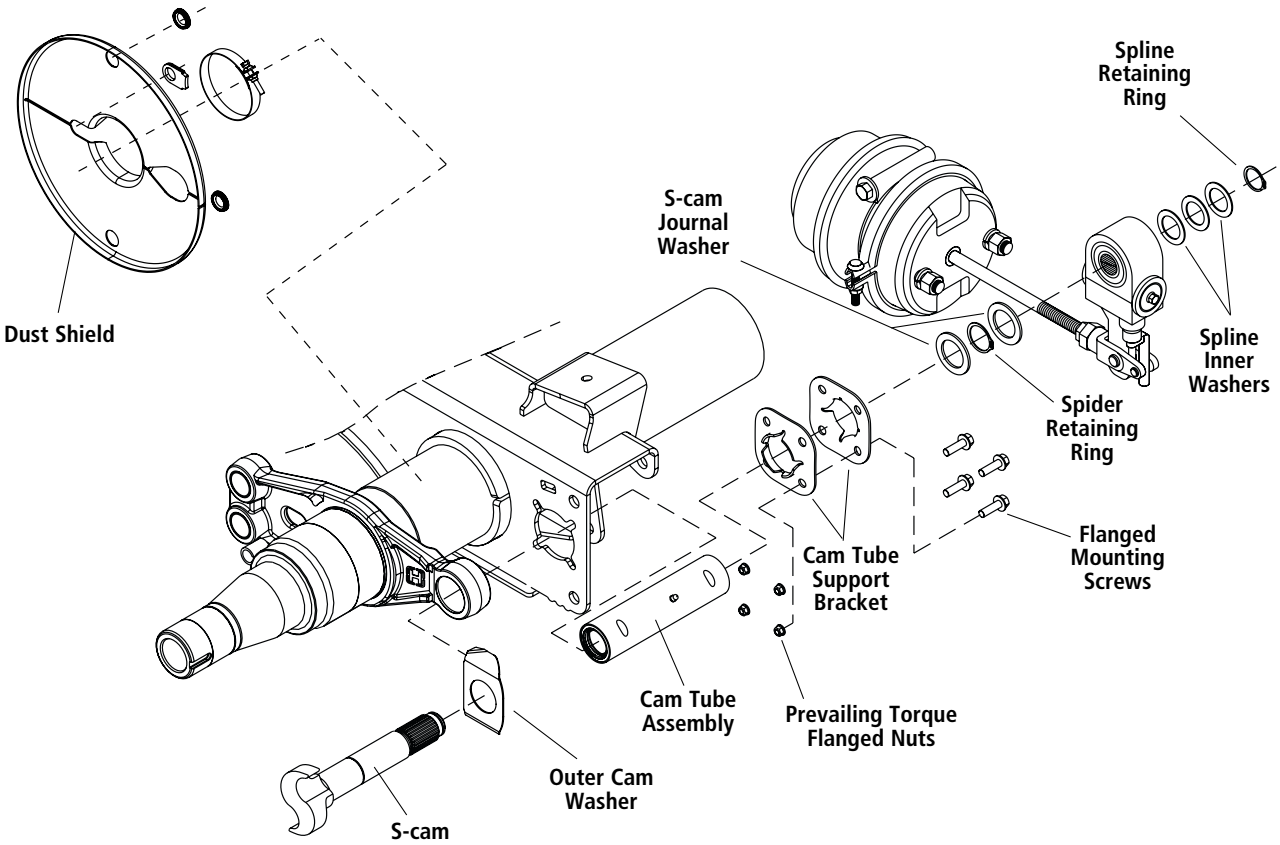

CAM SYSTEM TRLAXLE®

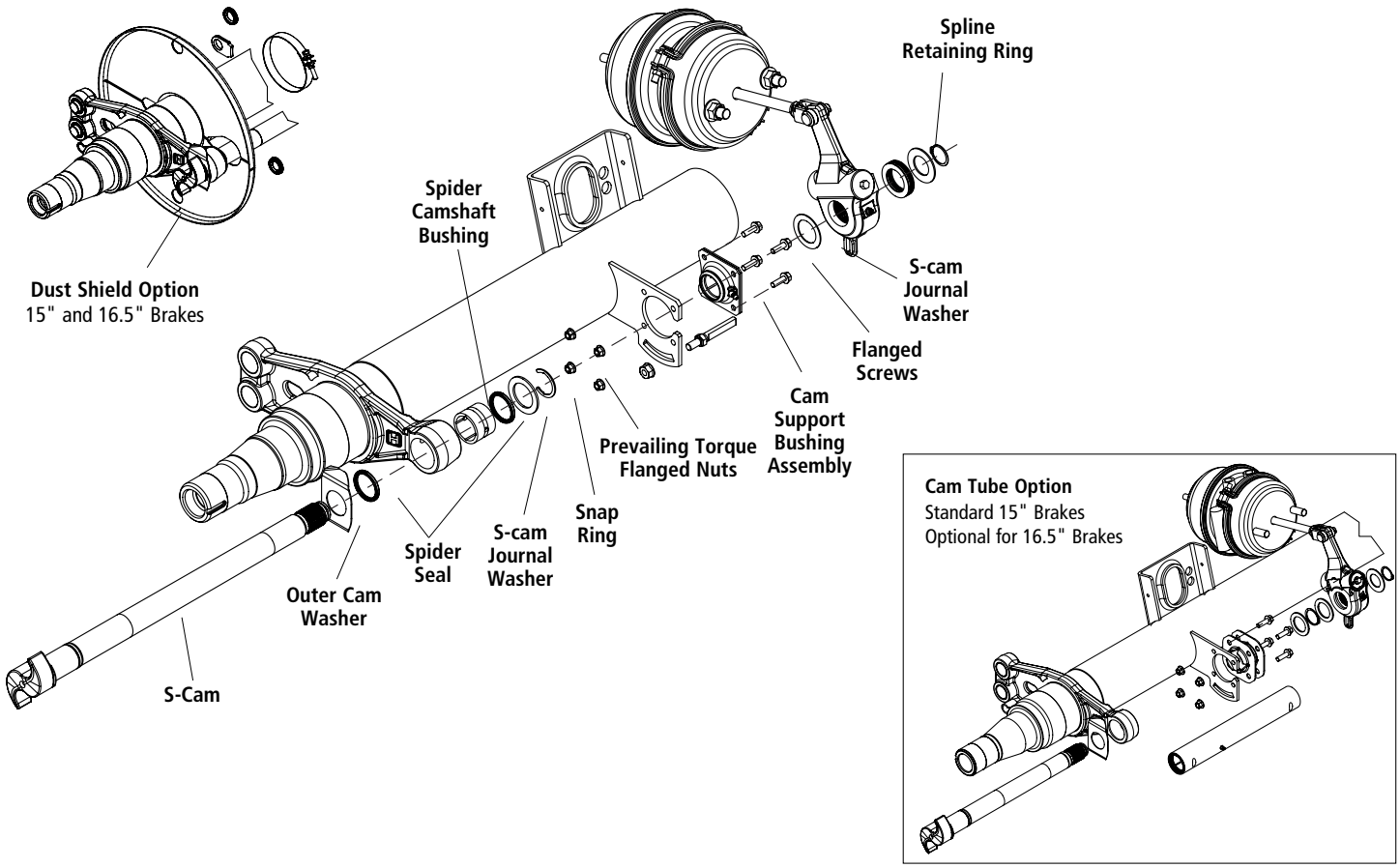

CAM SYSTEM (CONNEX® ST)

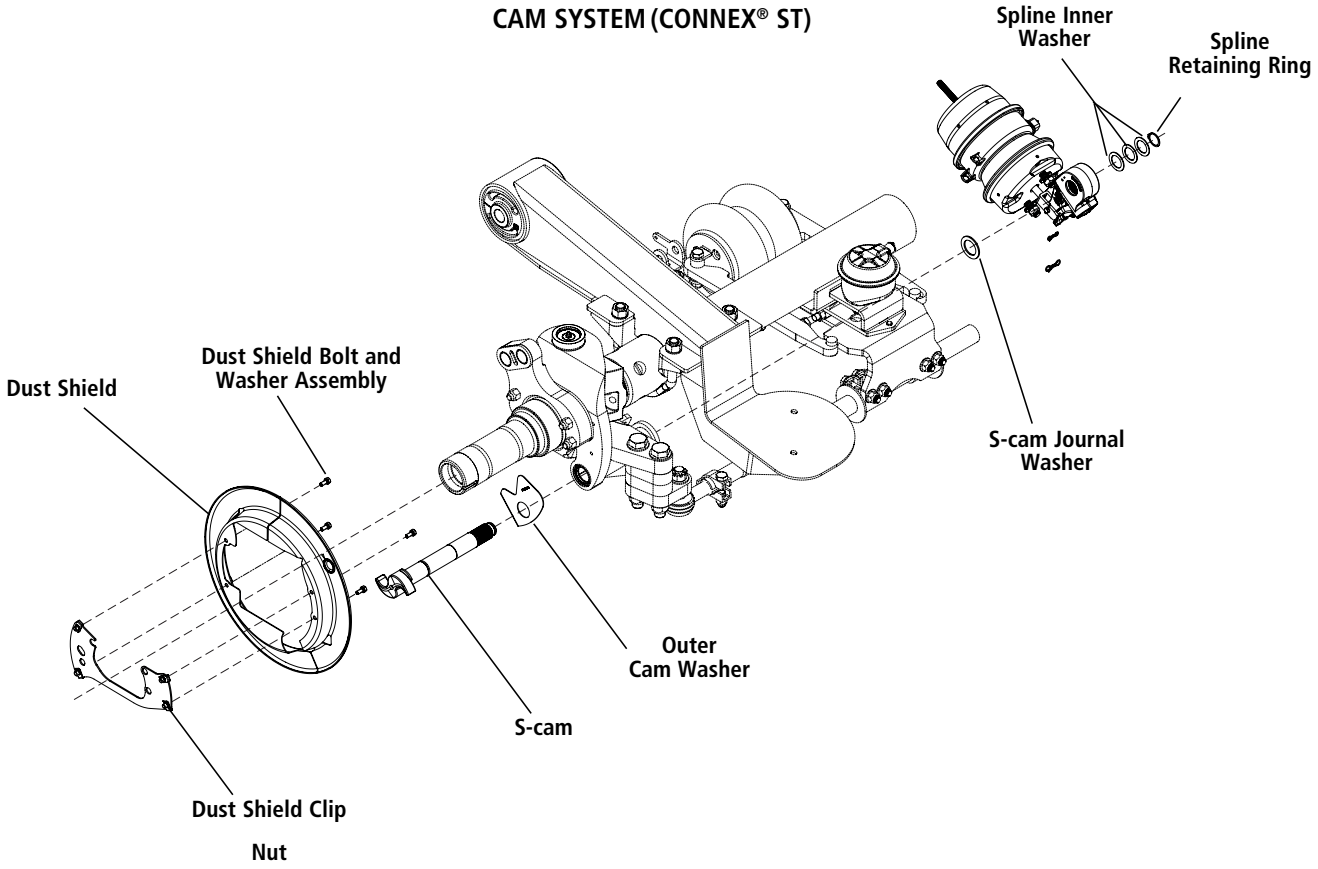

S-CAM COMPONENTS

1a S-CAM (INTRAAX® & VANTRAAX®)				
BRAKE SIZE	**15-inch**			
SPLINE SIZE			**QTY.**	**NOTES**
28	S-25024-1L	S-25024-1R	1	HXS® Hendrickson Extended Service™ brakes
BRAKE SIZE	**16-inch**			
10	S-23857-1L	S-23857-1R	1	Standard and HXS brakes; sold outside the United States
28	S-24636-1L	S-24636-1R	1	Standard and HXS brakes

1b S-CAM (TRLAXLE®)				
BRAKE SIZE	**16.50 × 7.00 or 16.50 × 8.63**			
S-CAM SUPPORT	**CAM BRACKET ONLY**		**CAM TUBE**	
S-CAM SPLINE	**10 Spline**	**28 Spline**	**10 Spline**	**28 Spline**
S-CAM UNDERHEAD LENGTH	**(Left Side / Right Side)**		**(Left Side / Right Side)**	
6.625"		S-30594-1L / 1R		
7"		S-30594-2L / 2R		
7.5"		S-30594-3L / 3R		
9"		S-30594-4L / 4R		
10.25"		S-30594-5L / 5R		
11.125"		S-30594-6L / 6R		S-30594-33L / 33R
15.625"		S-30594-7L / 7R		
17.625"		S-30594-8L / 8R		S-30594-34L / 34R
20.625"	S-30671-1L / 1R	S-30594-9L / 9R	S-30671-6L / 6R	S-30594-35L / 35R
21.5"		S-30594-10L / 10R		
21.625"		S-30594-11L / 11R		
22.625"	S-30671-2L / 2R	S-30594-12L / 12R	S-30671-22L / 22R	S-30594-57L/57R
23.375"		S-30594-13L / 13R		
23.5"		S-30594-14L / 14R		
23.75"	S-30671-3L / 3R	S-30594-15L / 15R	S-30671-7L / 7R	S-30594-36L / 36R
24"	S-30671-4L / 4R			
24.125"		S-30594-16L / 16R		
24.25"		S-30594-17L / 17R		
25.25"		S-30594-18L / 18R		
25.5"		S-30594-19L / 19R		
26"		S-30594-20L / 20R		
26.5"	S-30671-5L / 5R	S-30594-21L / 21R	S-30671-8L / 8R	S-30594-37L / 37R
27"		S-30594-22L / 22R		
28.375"		S-30594-23L / 23R		
28.5"		S-30594-24L / 24R		
29"		S-30594-25L / 25R		
29.5"		S-30594-26L / 26R		
30"		S-30594-27L / 27R		
30.5"		S-30594-28L / 28R		
32"		S-30594-29L / 29R		
32.5"		S-30594-30L / 30R		
33.375"		S-30594-31L / 31R		
35.5"		S-30594-32L / 32R		

S-CAM COMPONENTS (Continued)

1c S-CAM (TRLAXLE®)				
BRAKE SIZE	12.25 × 7.50			
S-CAM SUPPORT	CAM BRACKET ONLY		CAM TUBE or CAM TUBE B2A PREP	
S-CAM SPLINE	10 Spline	28 Spline	10 Spline	28 Spline
S-CAM UNDERHEAD LENGTH	(Left Side / Right Side)		(Left Side / Right Side)	
7"		S-31110-1L / 1R		
7.5"	S-31111-1L / 1R	S-31110-2L / 2R		
9"	S-31111-2L / 2R			
11.75"	S-31111-3L / 3R			
16.375"		S-31110-3L / 3R		
17.625"				S-31110-30L/30R
20.625"		S-31110-4L / 4R	S-31111-21L/21R	S-31110-34L/34R
21.5"	S-31111-4L / 4R	S-31110-5L / 5R		
22.25"		S-31110-6L / 6R		
22.625"				S-31110-36L/36R
23.375"	S-31111-5L / 5R	S-31110-7L / 7R		
23.75"	S-31111-6L / 6R	S-31110-8L / 8R	S-31111-8L	S-31110-16L
26"		S-31110-9L / 9R		
26.5"	S-31111-7L / 7R	S-31110-10L / 10R	S-31111-23L/23R	S-31110-41L/41R
27.75"		S-31110-11L / 11R		
28.25"		S-31110-12L / 12R		
29"		S-31110-13L / 13R		
30"				
31"		S-31110-14L / 14R		
32.5"		S-31110-15L / 15R		

1d S-CAM (TRLAXLE)		
BRAKE SIZE	15.00 × 8.63	
S-CAM SUPPORT	CAM TUBE	
S-CAM SPLINE	10 Spline	28 Spline
S-CAM UNDERHEAD LENGTH	(Left Side / Right Side)	
23.75"	S-31946-1L / 1R	S-31902-1L / 1R
26.5"	S-31946-3L / 3R	S-31902-3L / 2R

1e S-CAM (CONNEX® ST)		
BRAKE SIZE	16.5 × 7	
SPLINE SIZE		QTY
28	S-24636-1L / 1R	1

S-CAM UNDERHEAD LENGTH

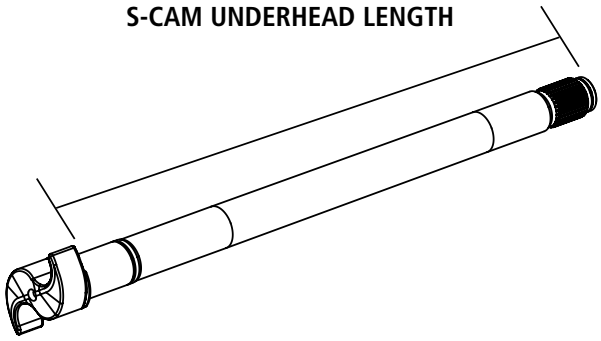

S-CAM COMPONENTS (Continued)

2a CAM TUBE SERVICE KIT (INTRAAX® & VANTRAAX®)		
BRAKE SIZE	**PART NUMBER**	**QUANTITY PER WHEEL-END**
Models shipped after April 2001		
16.5"	S-28890	1
15"	S-28891	1
Severe Service		
16.5"	S-31703	1
15"	S-31706	1
Kit Component List	Cam tube assembly, cam tube support brackets, outer cam washer, spider retaining ring, inner spline washer, spline retaining ring, S-cam journal washer, screws and nuts	

2b STANDARD SERVICE CAM TUBE (TRLAXLE®)					
BRAKE SIZE	**16.5"**		**15"**		**QUANTITY**
S-CAM SPLINE	**10**	**28**	**10**	**28**	
S-CAM UNDERHEAD LENGTH	**PART NUMBER**				
11.125"	S-35322-1	S-35322-6			1
17.625"	S-35322-2	S-35322-7			1
20.625"	S-35322-3	S-35322-8			1
23.75"	S-35322-4	S-35322-9	S-35322-4	S-35322-9	1
26.5"	S-35322-5	S-35322-10	S-35322-5	S-35322-10	1
Kit Component List	Cam tube sub-kit, support brackets, cam tube assembly and cam installation procedure				

2c SEVERE SERVICE CAM TUBE (TRLAXLE)			
BRAKE SIZE	**16.5" or 12.25"**		**QUANTITY**
S-CAM SPLINE	**10**	**28**	
S-CAM UNDERHEAD LENGTH	**PART NUMBER**		
23.75"	S-32122-5	S-32122	1
17.625"	S-32122-6	S-32122-1	1
20.625"	S-32122-7	S-32122-2	1
22.625"	S-32122-8	S-32122-3	1
26.5"	S-32122-9	S-32122-4	1
Kit Component List	Cam tube sub-kit, plate mounting cam bracket, cam tube assembly and cam installation procedure		

2d NON CAM TUBE OVERHAUL KIT (TRLAXLE)		
BRAKE SIZE	**16.5" and 12.25"**	**QUANTITY**
S-CAM UNDERHEAD LENGTH	**PART NUMBER**	
Any	S-31964	1
Kit Component List	Cam bearing assembly, screws, nuts, snap ring, washers, cam washer, spline retaining ring, spider retaining ring, bushing spider and cam bushing seal	

S-CAM COMPONENTS (Continued)

3 S-CAM OVERHAUL KITS (INTRAAX® & VANTRAAX®)			
OUTSIDE DIMENSION OF SPIDER BUSHING	PART NUMBER		QUANTITY
	Per Axle	Per Wheel	
Shipped before 11-24-1997			
1.88"	S-21181	S-21181/2	1
Shipped between 11-21-1997 and 4-1-2001			
2.00"	S-23974	S-23974/2	1
Kit Component List	Outer cam washer, spider seals, camshaft bushing, S-cam journal washer, spider retaining ring, spline inner washer, spline retaining ring and S-cam support bushing assembly		

4a CLAMP ON DUST SHIELD KIT – DRUM BRAKES			
AXLE DIAMETER	PART NUMBER	QUANTITY PER AXLE	NOTES
15" Brake			
5" Axle	S-28500-1550	1	Includes (1) dust shield and hardware
16.5" Brake			
5" Axle	S-28500-1650	1	Replaces S-23579/2; Includes (1) dust shield and hardware
5.75" LDA™ Large-Diameter Axle	S-28500-1657	1	Includes (1) dust shield and hardware

4b DUST SHIELD KIT (CONNEX® ST)		
PART NUMBER	QUANTITY PER AXLE	NOTES
S-37611-1650L	1	Includes (1) left side upper and lower dust shield and hardware
S-37611-1650R	1	Includes (1) right side upper and lower dust shield and hardware

4e DUST SHIELD HARDWARE KIT (CONNEX ST)		
PART NUMBER	QUANTITY PER AXLE	NOTES
S-37610-500	2	Includes (2) plugs, (4) clip nuts and (4) bolt and washer assemblies.

BRAKE ADJUSTERS

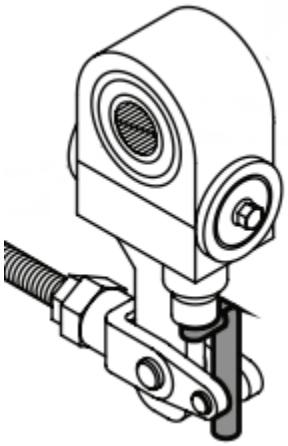

NOTE: Look for the suppliers' embossed logo or etched part number on the brake adjuster to help determine the correct Hendrickson part number.

AUTOMATIC BRAKE ADJUSTERS - INTRAAX®, VANTRAAX®, ULTRAA-K® & INTRAAX® SP (Drum Brakes Only)

BRAND	LENGTH	DESCRIPTION	PART NUMBER	CROSS REFERENCE NUMBER	QTY. PER AXLE
Bendix	5.5" std.	10 spline; includes slack only	C-29673	K043123	2
		28 spline; includes slack only	S-29628	K031529	2
	6.0"	10 spline; includes slack only	C-29674	K043085	2
		28 spline; includes slack only	S-29622-2	K047390	2
Gunite	5.5" std.	10 spline; includes unhanded slack, inner sleeve and outer nut	S-15191-1	SA-10602	2
		28 spline; includes unhanded slack, inner sleeve and outer nut	S-21398-1	SA-10802	2
	6.0"	10 spline; includes unhanded slack, inner sleeve and outer nut	S-15191-2	SA-10603	2
		28 spline; includes unhanded slack, inner sleeve and outer nut	S-21398-2	SA-10803	2
Haldex "SABA"	5.5" std.	10 spline; includes unhanded slack, anchor-stud, nut and clevis assembly	S-15192-3	409-20000	2
		28 spline; includes unhanded slack, anchor-stud, nut and clevis assembly	S-21399-3	409-20002	2
	6.0"	10 spline; includes unhanded slack, anchor-stud, nut and clevis assembly	S-15192-4	409-20004	2
		28 spline; includes unhanded slack, anchor-stud, nut and clevis assembly	S-21399-4	409-20006	2
Hendrickson Standard	5.5" std.	10 spline; includes unhanded slack, anchor-stud, nut and clevis assembly	S-37477-1	WBA07140S	2
		28 spline; includes unhanded slack, anchor-stud, nut and clevis assembly	S-37478-1*	-	2
	6.0"	10 spline; includes unhanded slack, anchor-stud, nut and clevis assembly	S-37477-2	WBA07125S	2
		28 spline; includes unhanded slack, anchor-stud, nut and clevis assembly	S-37478-2	WBA07115S	2
WABCO	5.5" std.	10 spline; includes unhanded slack, anchor-stud, nut and clevis assembly	S-38618-1	4332251020	2
	5.5" std.	28 spline; includes unhanded slack, anchor-stud, nut and clevis assembly	S-38619-1	4332250990	2

NOTE: Cross reference numbers include slack only.
* Private label through TSE.

AUTOMATIC BRAKE ADJUSTERS - TRLAXLE® & CONNEX® (Drum Brakes Only)

BRAND	LENGTH	BRAKE SIZE	DESCRIPTION	PART NUMBER	CROSS REFERENCE NUMBER	QTY. PER AXLE
Bendix	5.5"	15.00"× 8.63" 16.50"× 7.00" 16.50"× 8.63"	10 spline; includes slack only	C-29673	K043123	2
			28 spline; includes slack only	S-29628	K031529	2
	6.0"		10 spline; includes slack only	C-29674	K043085	2
			28 spline; includes slack only	S-29622-2	K047390	2
Gunite	5.5"	15.00"× 8.63" 16.50"× 7.00" 16.50"× 8.63"	10 spline; includes unhanded slack, inner sleeve and outer nut	S-15191-1	SA-10602	2
			28 spline; includes unhanded slack, inner sleeve and outer nut	S-21398-1	SA-10802	2
	6.0"		10 spline; includes unhanded slack, inner sleeve and outer nut	S-15191-2	SA-10603	2
			28 spine; includes unhanded slack, inner sleeve and outer nut	S-21398-2	SA-10803	2
Haldex "SABA"	5.5" (.5")	15.00"× 8.63" 16.50"× 7.00" 16.50"× 8.63"	10 spline; includes unhanded slack, anchor-stud, nut and clevis assembly	S-15192-3	409-20000	2
			28 spline; includes unhanded slack, anchor-stud, nut and clevis assembly	S-21399-3	409-20002	2
	6.0" (.5")	15.00"× 8.63" 16.50"× 7.00" 16.50"× 8.63"	10 spline; includes unhanded slack, anchor-stud, nut and clevis assembly	S-15192-4	409-20004	2
			28 spline; includes unhanded slack, anchor-stud, nut and clevis assembly	S-21399-4	409-20006	2
	5.5" Curved	12.25"× 7.50"	10 spline; includes slack only	D-37285	409-20008	2
			28 spline; includes slack only	D-37284	409-20010	2
	6.0" Curved	12.25"× 7.50"	10 spline; includes slack only	D-30199	409-20012	2
			28 spline; includes slack only	D-30201	409-20014	2
Hendrickson Standard	5.5" std.	15.00"× 8.63" 16.50"× 7.00" 16.50"× 8.63"	10 spline; includes unhanded slack, anchor-stud, nut and clevis assembly	S-37477-1	WBA07140S	2
			28 spline; includes unhanded slack, anchor-stud, nut and clevis assembly	S-37478-1*	-	2
	6.0"		10 spline; includes unhanded slack, anchor-stud, nut and clevis assembly	S-37477-2	WBA07125S	2
			28 spline; includes unhanded slack, anchor-stud, nut and clevis assembly	S-37478-2	WBA07115S	2

* Private label through TSE.

AUTOMATIC BRAKE ADJUSTERS - CONNEX® ST (Drum Brakes Only)

BRAND	LENGTH	DESCRIPTION	PART NUMBER	CROSS REFERENCE NUMBER	QTY. PER AXLE
Bendix	5.5"	28 spline; includes slack only	S-36183	K046808	2
	6.0"		S-36184	K047204	2

NOTE: Cross reference numbers include slack only.

MANUAL BRAKE ADJUSTERS - TRLAXLE® (Drum Brakes Only)

BRAND	LENGTH	BRAKE SIZE	DESCRIPTION	PART NUMBER	CROSS REFERENCE NUMBER	QTY. PER AXLE
Haldex[1]	6.0"	16.50"× 5.00" 16.50"× 7.00" 16.50"× 8.63"	10 spline; includes slack only	S-32873-1	KN47001	2
			28 spline; includes slack only	S-32873-2	CS44071	2

1. Haldex 6.0" is a multi-holed slack adjuster with capacity for 5.0", 6.0" and 7.0" lengths.

BRAKE CHAMBERS

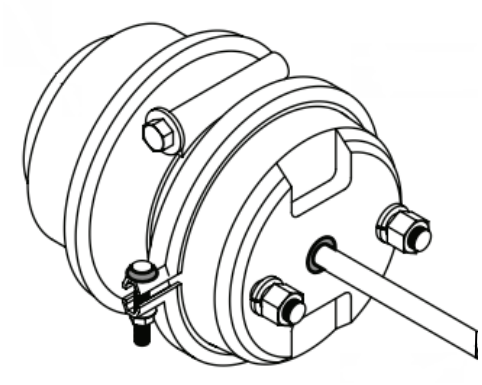

NOTE: Look for the suppliers' embossed logo or etched part number on the brake chamber to help determine the correct Hendrickson part number.

BRAKE CHAMBERS - SUSPENSION SYSTEMS (Drum Brakes Only)

BRAND	SIZE	STROKE	SUSPENSION MODELS	PART NUMBER	CROSS REFERENCE NUMBER	QTY. PER AXLE
Bendix	24/24	2.5"	AAT AANT HKANT HKAT UTKNT AAZNT (9.75" Push Rod)	S-26844-5	K026551	2
	24/30	2.5"		S-22792-5	K026550	2
	30/30	2.5"		S-20837-5	K020863	2
	30/30	3.0"		S-24247-5	K020868	2
	30/36	2.5"		S-24828-5	K020810	2
Haldex	24/24	2.5"		S-26844-2	1392424005	2
	24/30	2.5"		S-22792-2	1392430013	2
	30	2.5"		S-32871-2	129300255	2
	30/30	2.5"		S-20837-2	1393030543	2
	30/30	3.0"		S-24247-2	1373030332	2
	30/30 Ext. Life	2.5"		S-39868	1713030341	2
Hendrickson Standard	24/30	2.5"		S-22792-3	2430TL2-3466	2
	30/30*	2.5"		S-39936-1	-	2
	30/30	3.0"		S-32197	3030TL3-3568	2
TSE	30/30 Ext. Life	2.5"		S-38866-2	3030TL2ULP-91001	2
	30/30 Ext. Life	3.0"		S-38867-4	3030TL3ULP-91003	2
	30 Ext. Life	2.5"		S-40385-1	30SCL2ULP-91047	2

NOTE: Hendrickson part numbers and cross reference numbers include brake chamber only.

* Private label through TSE

BRAKE CHAMBERS - SUSPENSION SYSTEMS (Drum Brakes Only) – *continued*

BRAND	SIZE	STROKE	SUSPENSION MODELS	PART NUMBER	CROSS REFERENCE NUMBER	QTY. PER AXLE
Bendix	24/24	2.5"	AAL AANL AANLS AAEDL AAEDT HKANL HKAL HKARL AAZL (5.63" Push Rod)	S-26845-5	K028979	2
	24/30	2.5"		S-24163-5	K028978	2
	30/30	2.5"		S-24164-5	K020862	2
	30/30	3.0"		S-24769-5	K020867	2
	30/36	2.5"		S-24829-5	K020809	2
Haldex	24/24	2.5"		S-26845-2	1392424004	2
	24/30	2.5"		S-24163-2	1392430031	2
	30	2.5"		S-32872-2	129300256	2
	30/30	2.5"		S-24164-2	1393030505	2
	30/30	3.0"		S-24769-2	1373030331	2
	30/30 Ext. Life	2.5"		S-39869	1713030342	2
Hendrickson Standard	24/30	2.5"		S-24163-3	2430TL2-3465	2
	30/30*	2.5"		S-39936-2	-	2
	30/30	3.0"		S-32027	3030TL3-3567	2
TSE	30/30 Ext. Life	2.5"		S-38866-1	3030TL2ULP-91002	2
	30/30 Ext. Life	3.0"		S-38867-3	3030TL3ULP-91004	2
	30 Ext. Life	2.5"		S-40385-2	30SCL2ULP-91048	2

* Private label through TSE

BRAKE CHAMBERS - CONNEX® ST (Drum Brakes Only)

BRAND	SIZE	STROKE	SUSPENSION MODELS	PART NUMBER	CROSS REFERENCE NUMBER	QTY. PER AXLE
Hendrickson Standard	30	2.5"	CXSL	S-35974	30SCLW2-4091	2
	30/30	2.5"		S-35976	3030TLW2-4094	2
	30	3.0"		S-35757	30SCLW3-4072	2
	30/30	3.0"		S-35977	3030TLW3-4095	2
TSE	30 Ext. Life	2.5"		S-38862	30SCLW2ULP-91009	2
	30 Ext. Life	3.0"		S-38863	30SCLW3ULP-91010	2
	30/30 Ext. Life	2.5"		S-38864	3030TLW2ULP-91007	2
	30/30 Ext. Life	3.0"		S-38865	3030TLW3ULP-91008	2

BRAKE CHAMBERS - CONNEX® & TRLAXLE® (Drum Brakes Only)

BRAND	SIZE	STROKE	BRAKE SIZE	BRAKE CHAMBER BRACKET	PART NUMBER	CROSS REFERENCE NUMBER	QTY. PER AXLE
Haldex	24	2.5"	12.25"× 7.50"	High Rise	S-30681-5	129240134	2
				Standard	S-30681-6	129240135	2
			16.50"× 5.00" 16.50"× 7.00" 16.50"× 8.63"	Standard	S-30681-2	129240133	2
	30	2.5"	12.25"× 7.50"	High Rise	S-30679-4	129300115	2
				Standard	S-30679-2	129300236	2
			16.50"× 5.00" 16.50"× 7.00" 16.50"× 8.63"	Standard	S-30679-1	129300247	2
	30	3.0"	12.25"× 7.50"	High Rise	S-31975-2	127300113	2
				Standard	S-31975-1	127300112	2
	24/24	2.5"	12.25"× 7.50"	Standard	C-30680	1392424008	2
			16.50"× 5.00" 16.50"× 7.00" 16.50"× 8.63"		S-30680-1	1392424017	2
	24/30	2.5"	12.25"× 7.50"	High Rise	S-32466-2	1392430064	2
				Standard	S-32466-1	1392430063	2
	24/30 (16mm)	3.0"	16.50"× 5.00" 16.50"× 7.00" 16.50"× 8.63"	Standard	S-32011-3	1372430029	2
	30/30	2.5"	12.25"× 7.50"	Standard	S-30678-3	1393030518	2
			15.00"× 8.63"	Standard	S-30678-7	1393030547	2
			16.50"× 7.00" 16.50"× 8.63"	High Rise	S-30678-5	1393030519	2
			16.50"× 5.00" 16.50"× 7.00" 16.50"× 8.63"	Standard	S-30678-1	1393030512	2
	30/30 Ext. Life	2.5"	12.25"× 7.50"	Standard	S-30684-3	1493030144	2
			16.50"× 7.00" 16.50"× 8.63"	High Rise	S-30684-5	1493030146	2
			16.50"× 5.00" 16.50"× 7.00" 16.50"× 8.63"	Standard	S-39870-1	1713030343	2
	30/30 (16mm)	3.0"	16.50"× 5.00" 16.50"× 7.00" 16.50"× 8.63"	Standard	S-32012-3	1373030328	2
	30/30	3.0"	12.25"× 7.50"	High Rise	S-30683-4	1373030361	2
				Standard	S-30683-3	1373030360	2
			16.50"× 5.00" 16.50"× 7.00" 16.50"× 8.63"	Standard	S-30683-1	1373030333	2

NOTE: Hendrickson part numbers and cross reference numbers include brake chamber only.

BRAKE CHAMBERS - CONNEX® & TRLAXLE® (Drum Brakes Only) – *continued*

BRAND	SIZE	STROKE	BRAKE SIZE	BRAKE CHAMBER BRACKET	PART NUMBER	CROSS REFERENCE NUMBER	QTY. PER AXLE
Hendrickson Standard	30*	2.5"	12.25"× 7.50"	Standard	S-31911-2	30SCL2-3463	2
			16.50"× 5.00" 16.50"× 7.00" 16.50"× 8.63"		S-31911-1	30SCL2-3464	2
		3.0"	12.25"× 7.50"	Standard	S-32210-1	30SCL3-3563	2
			15.00"× 8.63"		S-32210-2	30SCL3-3564	2
			16.50"× 5.00" 16.50"× 7.00" 16.50"× 8.63"		S-32210-3	30SCL3-3565	2
	30/30	2.5"	12.25"× 7.50"	Standard	S-31912-2	3030TL2-3469	2
			16.50"× 5.00" 16.50"× 7.00" 16.50"× 8.63"		S-31912-1	3030TL2-3470	2
		3.0"	12.25"× 7.50"	Standard	S-32211	3030TL3-3566	2
TSE	30/30 Ext. Life	2.5"	16.50"× 7.50"	Standard	S-38866-3	3030TL2ULP-91000	2
		3.0"			S-38867-2	3030TL3ULP-91005	2

NOTE: Hendrickson part numbers and cross reference numbers include brake chamber only.

BRAKE DRUMS

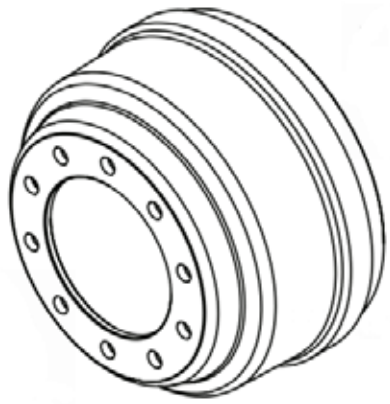

STANDARD DUTY BRAKE DRUMS (Drum Brakes Only)

BRAND	SIZE	BRAKE SIZE	DESCRIPTION	PART NUMBER	CROSS REFERENCE NUMBER	QTY. PER AXLE
WEBB	8 Stud × 275mm BCD	16.5"× 7"	Cast Drums	B-22574	66875B	2
	10 Stud × 11.25" BCD			C-25161	66864B	2
	10 Stud × 11.25" BCD	16.5"× 8.625"		C-23603	66855B	2
		15"× 8.625"		C-26391	61988Y	2
KIC	8 Stud × 275mm BCD	12.25"× 7.5"	Cast Drums	D-30113	54244-01	2
	10 Stud × 11.25" BCD	16.5"× 7"		D-35948	60000-018	2
	10 Stud × 335mm BCD	16.5"× 7"		C-31699	54250-018	2
		16.5"× 8.625"		S-30652	60002-018	2
	10 Stud × 11.25" BCD	16.5"× 7"	Fused Drums	S-38178	80002-018	2
		16.5"× 8.625"		S-38179	80008-018	2
Stemco	8 Stud × 275mm BCD	16.5"× 7"	Fused Drums	B-22359	88797B	2
		15"× 8.625"		C-27826	91438	2
	10 Stud × 11.25" BCD	16.5"× 7"		B-21620	89996B	2
		16.5"× 8.625"		B-29099	600026	2
		15"× 8.625"		C-26390	91482	2
Walther	10 Stud × 11.25" BCD	16.5"× 7"	Cast Drums	S-36713	C13-00043	2

HEAVY DUTY BRAKE DRUMS (Drum Brakes Only)

BRAND	SIZE	BRAKE SIZE	DESCRIPTION	PART NUMBER	CROSS REFERENCE NUMBER	QTY. PER AXLE
WEBB	8 Stud × 275mm BCD	12.25"× 7.5"	Cast Drums	S-30106	63680F	2
	10 Stud × 11.25" BCD	16.5"× 7"		B-21619	66884B	2
	10 Stud × 335mm BCD			C-26440	66250B	2

NOTE: Hendrickson part numbers and cross reference numbers include drums only.

BRAKE PAD

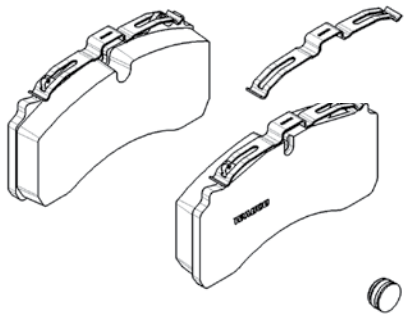

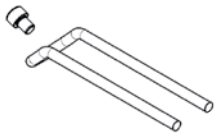

BRAKE PAD KITS (Air Disc Brakes Only)

ADB BRAND	DESCRIPTION	PART NUMBER	CROSS REFERENCE NUMBER	QTY. PER AXLE
Hendrickson MAXX22T™	Includes 4 pads, 2 springs, 2 holder brackets, 2 screws and 2 plugs	S-35303-1	6402229272	1
WABCO PAN22	Includes 4 pads, 6 springs, 2 bolts, 2 holder bars and 2 plugs	S-32676-1	6402259222	1
WABCO PAN 17	Includes 4 pads, 6 holder springs, 2 holder brackets, 2 screws and 2 plugs	S-36837-1	12999806	1
WABCO PAN19	Includes 4 pads, 6 holder springs, 2 holder brackets, 2 screws and 2 plugs	S-36838-1	6401959332	1
Bendix ADB22X	Includes 4 pads, 4 pad holder springs, 2 pad retainers, 2 pad retainer pins, 2 washers, 2 spring clips, 2 shear adapters and 2 adjuster caps	S-29152-2	K070796	1
Haldex DB22LT	Includes 2 pads, 1 locking tab, 2 pad springs, 1 plug and 1 bolt	S-30560-8	790-22040	2
Haldex DB22LD	Includes 2 pads, 1 locking tab, 2 pad springs, 1 bolt and 1 plug	S-30674	790-22008	2

CALIPER ASSEMBLY

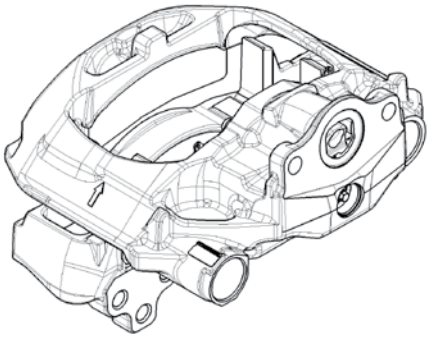

CALIPER ASSEMBLY (Air Disc Brakes Only)

ADB BRAND	DESCRIPTION	PART NUMBER	CROSS REFERENCE NUMBER	QTY. PER AXLE
Hendrickson MAXX22T™	Includes 1 caliper assembly – LH and mounting hardware	S-35973-L	6402220070	1
	Includes 1 caliper assembly – RH and mounting hardware	S-35973-R	6402220080	1
WABCO PAN22	Includes 1 caliper assembly – LH and mounting hardware	S-33648-2	6402250800	1
	Includes 1 caliper assembly – RH and mounting hardware	S-33648-3	6402250810	1
WABCO PAN17	Includes 1 caliper assembly – LH and mounting hardware	S-39094-L	40175072	1
	Includes 1 caliper assembly – RH and mounting hardware	S-39094-R	40175073	1
WABCO PAN19	Includes 1 caliper assembly – LH and mounting hardware	S-39093-L	6401951010	1
	Includes 1 caliper assembly – RH and mounting hardware	S-39093-R	6401951020	1
Bendix ADB22X-LT	Includes 1 caliper assembly – LH and mounting hardware	S-33647-2	802985	1
	Includes 1 caliper assembly – RH and mounting hardware	S-33647-3	802984	1
Haldex DB22LT	Includes 1 caliper assembly and mounting hardware	S-35097-1	790-94025	2
	Includes 1 caliper assembly	S-30560-10	790-94025	2

NOTE: Cross reference numbers include caliper only.

CALIPER ATTACHMENT HARDWARE KITS (Air Disc Brakes Only)

ADB BRAND	DESCRIPTION	PART NUMBER	QTY. PER AXLE
Hendrickson MAXX22T™	Includes 12 bolts and 12 washers	S-33649-5	1
	Includes 6 bolts and 6 washers	S-33649-6	2
WABCO PAN22 WABCO PAN19 Bendix ADB22X-LT	Includes 12 bolts and 12 washers	S-33649-1	1
	Includes 6 bolts and 6 washers	S-33649-2	2
WABCO PAN17	Includes 12 bolts and 12 washers	S-33649-7	1
	Includes 6 bolts and 6 washers	S-33649-8	2

CALIPER COMPONENTS (Air Disc Brakes Only)

ADB BRAND	DESCRIPTION	CONTAINS	PART NUMBER	CROSS REFERENCE NUMBER	QTY. PER AXLE
Hendrickson MAXX22T™	Guide Bolt Kit	Includes 1 plug, 2 inner sealing, 2 outer sealing, 2 sliding bolts, 2 metal caps, 2 screws and 3 guide pin bushings	S-35303-4	6402229282	2
	Pressure Plate Kit	Includes 1 pressure plate	S-35303-9	6402229262	1
	WABCO Tone Ring Kit	Includes 1 tone ring and 1 locking ring	S-39042	6629059202	2
WABCO PAN22 WABCO PAN19	Guide Bolt Kit	Includes 1 plug, 1 boot, 2 sealings, 3 bushings, 2 bolts, 2 screws and 2 covers	S-32676-4	6402229212	2
Hendrickson MAXX22T WABCO PAN22 WABCO PAN17 WABCO PAN 19	Replacement Gasket Kit	Includes 1 plug, 1 sealing and 1 boot	S-32676-3	6401759202	1
WABCO PAN17	Guide Bolt Kit	Includes 1 plug, 1 bolt, 2 sealings, 3 bushings, 2 bolts, 2 screws and 2 covers	S-36837-4	12999699VT	1
	Pressure Plate Kit	Includes 1 pressure plate	S-36837-9	6401759402	1
WABCO PAN19	Guide Bolt Kit	Includes 1 plug, 1 bolt, 2 sealings, 3 bushings, 2 bolts, 2 screws and 2 covers	S-32676-4	6402259212	1
	Pressure Plate Kit	Includes 1 pressure plate	S-36838-9	6401959362	1
Bendix ADB22X-LT	Splint Kit	Includes 25 spring clips	S-29152-4	803151	Bulk
	Shear Adapter	Includes 10 shear adapters	S-29152-5	802455	Bulk
	Tappet / Boot Kit	Includes 2 tappets, 1 boot assembly, 2 tappet bushings and 2 inner seals	S-29152-6	K092079	2
	Adjuster Cover	Non-Wear Sensing; Includes 10 adjuster caps	S-29152-7	802643	Bulk
	Guide Pin, Seal and Boot Kit	Includes 2 boot retaining rings, 2 inner boots, 1 brass bushing, 1 guide pin, 1 caliper bolt, 1 cap, 1 guide sleeve, 1 guide pin and 1 cover	S-29152-9	803114	2
	Guide Pin Grease	8g White Grease	S-29152-12	LL14525	2
		500g White Grease	S-29152-13	K021964	Bulk
	Caging Bolt Plug	Includes 1 plug	S-29152-19	K034202	2
Haldex DB22LT	Pad Retainer Kit	Includes 1 locking tab, 1 pad retainer, 2 pad springs and 1 bolt	S-30560-12	790-94897	2
	Adjustment Shaft Repair Kit	Includes 1 adjustment shaft, 1 plug and 1 radial seal	S-30560-13	790-94892	2

NOTE: See page 33 for drawings of the caliper components (air disc brake only).

BRAKE CHAMBER

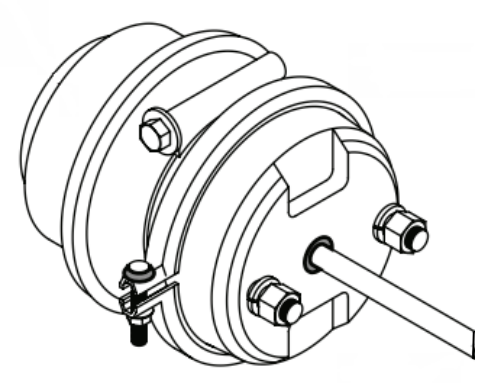

BRAKE CHAMBERS (Air Disc Brakes Only)

ADB BRAND	CHAMBER BRAND	CHAMBER SIZE	SUSPENSION MODEL	DESCRIPTION	PART NUMBER	CROSS REFERENCE NUMBER	QTY. PER AXLE
Hendrickson MAXX22T™	TSE	14		Left Handed	S-40396-L	14HSCLD2-4492	
				Right Handed	S-40396-R	14HSCLD2-4491	
				Unhanded	S-40396-U	14HSCLD2-4493	
		14/24		Left Handed	S-40395-L	1424TLD2H-4489	
				Right Handed	S-40396-R	1424TLD2H-4488	
				Unhanded	S-40396-U	1424TLD2H-4490	
		18	AAT AANT	Left Handed	S-38265-L	18HSCLD2-4296	1
				Right Handed	S-38265-R	18HSCLD2-4295	1
			AAL AAEDL AAEDT AANLS	Unhanded	S-38265-U	18HSCLD2-4297	2
		18 / 24	AAT AANT	Left Handed	S-38264-L	1824TLD2H-4293	1
				Right Handed	S-38264-R	1824TLD2H-4292	1
			AAL AAEDL AAEDT AANLS	Unhanded	S-38264-U	1824TLD2H-4294	2
	WABCO	18	AAT AANT	Left Handed	S-34445-L	4005120040	1
				Right Handed	S-34445-R	4005120050	1
			AAL AAEDL AAEDT AANLS	Unhanded	S-34445-U	4005120030	2
		18 / 24	AAT AANT	Left Handed	S-38721-L	9253470070	1
				Right Handed	S-38721-R	9253470080	1
			AAL AAEDL AAEDT AANLS	Unhanded	S-38721-U	9253470060	2

BRAKE CHAMBERS (Air Disc Brakes Only) – *continued*

ADB BRAND	CHAMBER BRAND	CHAMBER SIZE	SUSPENSION MODEL	DESCRIPTION	PART NUMBER	CROSS REFERENCE NUMBER	QTY. PER AXLE
WABCO PAN22	TSE	20	AAT AANT	Left Handed	S-38780-L	20HSCLD2-4344	1
				Right Handed	S-38780-R	20HSCLD2-4343	1
			AAL AAEDL AAEDT AANLS	Unhanded	S-38780-U	20HSCLD2-4345	2
		20 / 24	AAT AANT	Left Handed	S-38779-L	2024TLD2H-4341	1
				Right Handed	S-38779-R	2024TLD2H-4340	1
			AAL AAEDL AAEDT AANLS	Unhanded	S-38779-U	2024TLD2H-4342	2
	WABCO	20	AAT AANT	Left Handed	S-32793-L	4235051510	1
				Right Handed	S-32793-R	4235051500	1
			AAL AAEDL AAEDT AANLS	Unhanded	S-32793-U	4235051520	2
		20 / 24	AAT AANT	Left Handed	S-38723-L	9253800210	1
				Right Handed	S-38723-R	9253800220	1
			AAL AAEDL AAEDT AANLS	Unhanded	S-38723-U	9253800200	2
Bendix ADB22X-LT	Bendix	18 / 24	AAT AANT	Left Handed	S-38105-L	K099771	1
				Right Handed	S-38105-R	K099772	1
			AAL AAEDL AAEDT AANLS	Unhanded	S-38105-U	K099773	2
Haldex DB22LT	Haldex	20 / 30	AAT AANT AAL AAEDL AAEDT AANLS	Left Handed Right Handed Unhanded	Order Direct from Haldex	–	–
WABCO PAN17	WABCO	20 / 24	HT250UB	Left Handed	S-36215-L	9253800250	1
				Right Handed	S-36215-R	9253800240	1
WABCO PAN19	WABCO	16	AAT AANT	Left Handed	S-37027-L	4235040350	1
				Right Handed	S-37027-R	4235040360	1
			AAL AAEDL AAEDT AANLS	Unhanded	S-37027-U	4235040340	2
		16 / 24	AAT AANT	Left Handed	S-37026-L	9253840270	1
				Right Handed	S-37026-R	9253840280	1
			AAL AAEDL AAEDT AANLS	Unhanded	S-37026-U	9253840260	2

BRAKE CHAMBERS (Air Disc Brakes Only) – *continued*

ADB BRAND	CHAMBER BRAND	CHAMBER SIZE	SUSPENSION MODEL	DESCRIPTION	PART NUMBER	CROSS REFERENCE NUMBER	QTY. PER AXLE
WABCO PAN19	WABCO	16	AAT AANT	Left Handed	S-37027-L	4235040350	1
				Right Handed	S-37027-R	4235040360	1
			AAL AAEDL AAEDT AANLS	Unhanded	S-37027-U	4235040340	2
		16 / 24	AAT AANT	Left Handed	S-37026-L	9253840270	1
				Right Handed	S-37026-R	9253840280	1
			AAL AAEDL AAEDT AANLS	Unhanded	S-37026-U	9253840260	2
	TSE	16	AAT AANT	Left Handed	S-38778-L	16HSCLD2-4338	1
				Right Handed	S-38778-R	16HSCLD2-4337	1
			AAL AAEDL AAEDT AANLS	Unhanded	S-38778-U	16HSCLD2-4339	2
		16 / 24	AAL AANT	Left Handed	S-38777-L	1624TLD2H-4335	1
				Right Handed	S-38777-R	1624TLD2H-4334	1
			AAL AAEDL AAEDT AANLS	Unhanded	S-38777-U	1624TLD2H-4336	2

ABS SENSOR

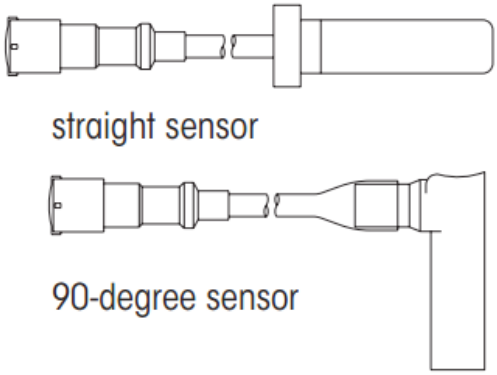

ABS SENSOR - AIR DISC BRAKE

BRAND	SENSOR TYPE	WIRE LENGTH	RETAINING SLEEVE	PART NUMBER	CROSS REFERENCE NUMBER	QTY. PER AXLE
Bendix	Straight (all)	78.2"	Meritor	S-22889-4	K145043BX	1
Haldex	Straight	19.7"	Meritor	S-22889-1	364 528 001	1
		78.7"	Meritor	S-22889-2	364 528 011	1
Meritor WABCO	Straight	39.4"	Meritor	S-22889-3	441 032 334 0	1

ABS SENSOR - DRUM BRAKE

BRAND	SENSOR TYPE	WIRE LENGTH	RETAINING SLEEVE	PART NUMBER	CROSS REFERENCE NUMBER	QTY. PER AXLE
Bendix	90º Angle (Std)	75.6"	Meritor	S-22889-14	K144020BX	1
	90º Angle (Std)	14.84"	Bendix	S-22889-7	300083	1
Haldex	90º Angle (Std)	19.7"	Haldex	S-22889-6	364 094 001	1
WABCO	90º Angle (Std)	15.7"	Meritor	S-22889-8	441 032 8080	1
		36.0"	Haldex	S-22889-11	441 032 8090	1

ABS Sensor Kits Contain: (1) sensor, (1) sleeve, (2) nylon ties 4.5" and (1) UV resistant nylon tie 21"

Note: Cross reference numbers include sensor only.

DUST SHIELD

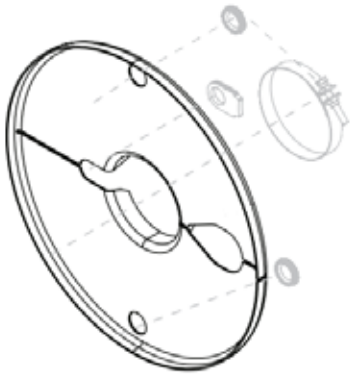

DUST SHIELD KITS - DRUM BRAKES

SUSPENSION MODELS	BRAKE SIZE	AXLE DIAMETER	PART NUMBER	QTY. PER AXLE	NOTES
VANTRAAX® ULTRAA-K® INTRAAX® INTRAAX SP TRLAXLE® CONNEX®	16.5"	5"	S-28500-1650	2	Replaces S-23579/2 Includes (1) dust shield and hardware
		5.75" LDA™	S-28500-1657	2	Includes (1) dust shield and hardware
	15"	5"	S-28500-1550	2	Includes (1) dust shield and hardware
CONNEX® ST	16.5"	5"	S-37611-1650L	1	Roadside; includes upper and lower dust shields, (2) port plugs, (4) screw and washer assemblies and (4) clip nuts
			S-37611-1650R	1	Curbside; includes upper and lower dust shields, (2) port plugs, (4) screw and washer assemblies and (4) clip nuts
			S-37610-500	2	Includes (2) port plugs, (4) screw and washer assemblies and (4) clip nuts

DUST SHIELD KITS - AIR DISC BRAKES

ADB MODELS	BRAKE SIZE	AXLE DIAMETER	PART NUMBER	QTY. PER AXLE	NOTES
Hendrickson MAXX22T™	415mm	5" & 5.75" LDA	S-35720-4415	2	Includes (1) bolt-on dust shield and mounting hardware
	415mm	5" & 5.75" LDA	S-35720-1	2	Includes (1) bolt-on dust shield
	415mm	5" & 5.75" LDA	S-35766-415	2	Includes hardware for bolt-on dust shield
WABCO PAN22 Bendix ADB22X-LT Haldex DB22LT	430mm	5"	S-28570-4350	2	Includes (1) clamp-on dust shield and (1) band clamp
	430mm	5.75" LDA	S-28570-4357	2	
WABCO PAN22 Bendix ADB22X-LT	430mm	5" & 5.75" LDA	S-36224-1	2	Includes (1) bolt-on dust shield
	430mm	5" & 5.75" LDA	S-36224-4430	2	Includes (1) bolt-on dust shield and hardware
WABCO PAN17	325mm	5"	S-36832-1	2	Includes (1) bolt-on dust shield
	325mm	5"	S-36832-4325	2	Includes(1) bolt-on dust shield and mounting hardware
WABCO PAN19	375mm	5" & 5.75" LDA	S-36224-2	2	Includes (1) bolt-on dust shield
	375mm	5" & 5.75" LDA	S-36224-4375	2	Includes (1) bolt-on dust shield and mounting hardware

AXLE NUT KITS

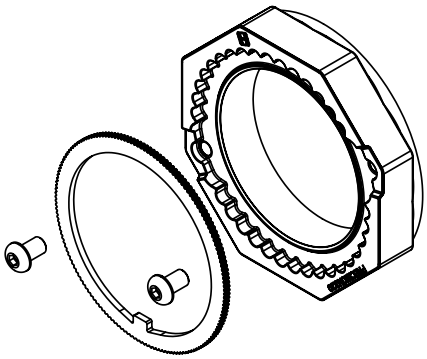

AXLE NUT KITS

SPINDLE NUT	SPINDLE	PART NUMBER	CROSS REFERENCE NUMBER	QTY. PER AXLE	NOTES
Hendrickson PRECISION320®[2]	HP	S-32844/2	–	2	Includes (1) spindle nut, washer and (2) screws
Hendrickson PRECISION240®[3]	HN	S-33332/2	–	2	
Hendrickson 3-Piece Nut	HN	S-20492/2	–	2	Includes (1) each inner axle nut, outer axle nut, axle lock washer and set screw
	HP	S-20475/2	–	2	
STEMCO PRO-TORQ	HN	A-23851	4474743	2	1-piece spindle nut
	HP	A-23852	4474723	2	

2. Please refer to T77001 for hubcap compatibility of PRECISION320 Spindle Nut Systems.
3. Please refer to T77002 for hubcap compatibility of PRECISION240 Spindle Nut Systems.

BEARINGS

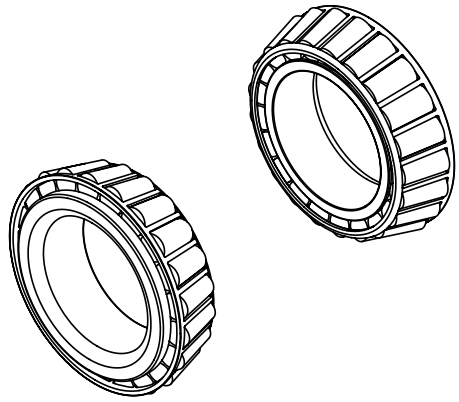

BEARINGS

BRAND	SPINDLE	DESCRIPTION	PART NUMBER	CROSS REFERENCE NUMBER	QTY. PER AXLE
ZWZ	HN	Inner Cup and Cone Assembly	S-39011	KHM218248-NA	2
		Outer Cup and Cone Assembly	S-39012	KHM212049-NA	2
	HP	Inner Cup and Cone Assembly	S-39010	KHM518445-NA	2
		Outer Cup and Cone Assembly			
Hyatt	HN	Inner Cup and Cone Assembly	S-32267-2	SET414	2
		Outer Cup and Cone Assembly	S-32267-1	SET413	2
	HP	Inner Cup and Cone Assembly	S-32267-3	SET415	2
		Outer Cup and Cone Assembly			2
Timken	HN	Inner Cup and Cone Assembly	S-37825	SET441-900SA	2
		Outer Cup and Cone Assembly	S-37826	SET440-900SA	2
	HP	Inner Cup and Cone Assembly	S-37827	SET444-900SA	2
		Outer Cup and Cone Assembly			

NOTE: Hendrickson part numbers and cross reference numbers include bearings only.

SEALS

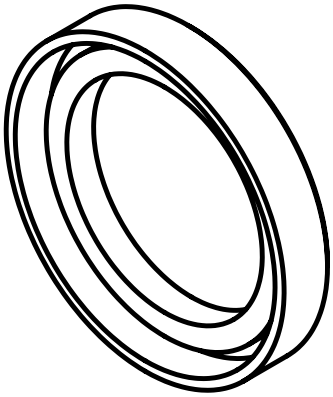

SEALS

BRAND	SPINDLE	PART NUMBER	CROSS REFERENCE NUMBER	QTY. PER AXLE
Federal Mogul	HN	S-27267-HN	M380025TX0	2
	HP	S-27268-HP	M380065TX0	2
STEMCO Guardian	HN	S-11571-HN	307-0743	2
	HP	A-14895	307-0723	2
STEMCO Discover	HN	A-25538	373-0243	2
	HP	A-25539	373-0223	2
STEMCO Voyager	HN	A-25540	373-0143	2
	HP	S-25541-HP	373-0123	2

NOTE: Hendrickson part numbers and cross reference numbers include seal only.

HUBS

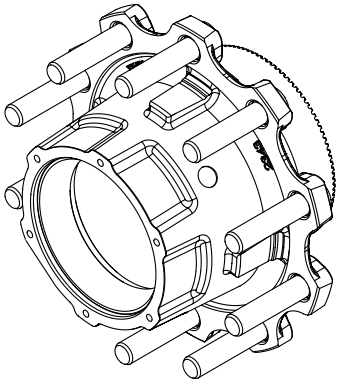

HUBS - HN SPINDLE (Drum Brakes Only)

HUB BRAND & MATERIAL	RTR® PACKAGE	BEARING BRAND	WHEEL MATERIAL	SIZE	BRAKE SIZE	PART NUMBER	CROSS REFERENCE NUMBER
ConMet Aluminum	Std. Service HVS® HXL3® HXL5®	Std.	Steel	10 stud × 11.25" BC	15"× 8-5/8" 16.5"× 7" 16.5"× 8-5/8"	C-22549-11	105775
		Std.	Steel/Aluminum Aluminum			C-22549-12	105776
	Std. Service HLS® HVS®	Std.	Steel	8 stud × 275mm BC	15"× 8-5/8" 16.5"× 7"	C-22551-7	105769
		Std.	Steel/Aluminum Aluminum			C-22551-8	105760
	ConMet PreSet	Std.	Steel	10 stud × 11.25" BC	15"× 8-5/8" 16.5"× 7" 16.5"× 8-5/8"	C-24749-1	10082440
		Std.	Steel/Aluminum Aluminum			C-24749-2	10082442
		Std.	Steel	8 stud × 275mm BC	15"× 8-5/8" 16.5"× 7"	C-25548-1	10082446
		Std.	Steel/Aluminum Aluminum			C-25548-2	10082448
Walther EMC Dura-Light Hub® (ADI)	Std. Service HLS HVS HXL3 HXL5	Std.	Steel	10 stud × 11.25" BC	15"× 8-5/8" 16.5"× 7" 16.5"× 8-5/8"	S-31906-1	10-00114M-102
		Std.	Steel/Aluminum Aluminum			S-31906-2	10-00114M-101
Webb Ductile Iron	Std. Service HLS HVS HXL7®	Std.	Steel	10 stud × 11.25" BC	15"× 8-5/8" 16.5"× 7" 16.5"× 8-5/8"	S-35216-1	20235--3T-73
		Std.	Steel/Aluminum Aluminum			S-35216-2	20235--5T-73
		Timken	Steel	10 stud × 11.25" BC	15"× 8-5/8" 16.5"× 7" 16.5"× 8-5/8"	S-35216-3	20231--3T-73
		Timken	Steel/Aluminum Aluminum			S-35216-4	20231--5T-73
	Std. Service HLS HVS HXL3 HXL5	Std.	Steel	8 stud × 275mm BC	12.25"× 7.5"	S-38163-1	20275--3T80-71
		Std.	Steel/Aluminum Aluminum			S-381632	20275--5T80-71
KIC Ductile Iron	Std. Service HXL3 HXL5	Std.	Steel	10 stud × 11.25" BC	15"× 8-5/8" 16.5"× 7" 16.5"× 8-5/8"	S-34419-3	HUB-01025FTY
		Std.	Steel/Aluminum Aluminum			S-34419-2	HUB-01025FLTY
	Std. Service HXL5	Std.	Steel	8 stud × 275mm BC	12.25"× 7.5"	C-37196-1	HUB-00133FTY
		Std.	Steel/Aluminum Aluminum			C-37196-2	HUB-00133FLTY
	Global Service	Std.	Steel	10 stud × 335mm BC	16.5"× 7" 16.5"× 8-5/8"	D-33466-1	HUB-00108FTY
		Std.	Steel/Aluminum Aluminum			D-33466-2	HUB-00108FLTY

NOTE: Hendrickson part numbers and cross reference numbers include hub only.

HUBS - HP SPINDLE (Drum Brakes Only)

HUB BRAND & MATERIAL	RTR® PACKAGE	BEARING BRAND	WHEEL MATERIAL	SIZE	BRAKE SIZE	PART NUMBER	CROSS REFERENCE NUMBER
ConMet Aluminum	Std. Service HLS® HVS® HXL3® HXL5® HXL7®	Std.	Steel	10 stud × 11.25" BC	15"× 8-5/8" 16.5"× 7" 16.5"× 8-5/8"	C-23593-9	10001196
		Std.	Steel/Aluminum Aluminum			C-23593-10	10001198
		Timken	Steel			C-23593-17	10001190
		Timken	Steel/Aluminum Aluminum			C-23593-18	10001192
	Std. Service HLS HVS	Std.	Steel	8 stud × 275mm BC	15"× 8-5/8" 16.5"× 7"	C-23373-3	106302
		Std.	Steel/Aluminum Aluminum			C-23373-4	106304
	ConMet PreSet	Std.	Steel	10 stud × 11.25" BC	15"× 8-5/8" 16.5"× 7" 16.5"× 8-5/8"	C-25551-1	10082436
		Std.	Steel/Aluminum Aluminum			C-25551-2	10082438
		Std.	Steel	8 stud × 275mm BC	15"× 8-5/8" 16.5"× 7"	C-25550-1	10082443
		Std.	Steel/Aluminum Aluminum			C-25550-2	10082445
Walther EMC Dura-Light Hub® (ADI)	Std. Service HLS HVS HXL3 HXL5 HXL7	Std.	Steel	10 stud × 11.25" BC	15"× 8-5/8" 16.5"× 7" 16.5"× 8-5/8"	S-31905-1	10-00112M-102
		Std.	Steel/Aluminum Aluminum			S-31905-2	10-0112M-101
Webb Ductile Iron	Std. Service HLS HVS HXL3 HXL5 HXL7	Std.	Steel	10 stud × 11.25" BC	15"× 8-5/8" 16.5"× 7" 16.5"× 8-5/8"	C-23593-5	23435--3T-73
		Std.	Steel/Aluminum Aluminum			C-23593-6	23435--5T-73
		Timken	Steel			C-23593-19	23431--3T-73
		Timken	Steel/Aluminum Aluminum			C-23593-20	23431--5T-73
	Std. Service HLS HVS HXL3 HXL5	Std.	Steel	8 stud × 275mm BC	12.25"× 7.5"	S-38164-1	23475--3T80-71
		Std.	Steel/Aluminum Aluminum			S-38164-2	23475--5T80-71
KIC Ductile Iron	Std. Service HXL3 HXL5	Std.	Steel	10 stud × 11.25" BC	15"× 8-5/8" 16.5"× 7" 16.5"× 8-5/8"	S-34420-1	HUB-01043FTY
		Std.	Steel/Aluminum Aluminum			S-34420-2	HUB-01043FLTY
	Std. Service HXL5	Std.	Steel	8 stud × 275mm BC	12.25"× 7.5"	S-36163-1	HUB-41045FTY
		Std.	Steel/Aluminum Aluminum			S-36163-2	HUB-41045FLTY
	Global Service	Std.	Steel	10 stud × 335mm BC	16.5"× 7" 16.5"× 8-5/8"	C-34758-1	HUB-40310FTY
		Std.	Steel/Aluminum Aluminum			C-34758-2	HUB-40310FLTY

NOTE: Hendrickson part numbers and cross reference numbers include hub only.

HUBS & ROTOR ASSEMBLIES - HN SPINDLE (Air Disc Brakes Only)

ADB BRAND	HUB BRAND	HUB MATERIAL	BEARING BRAND	WHEEL MATERIAL	SIZE	PART NUMBER	CROSS REFERENCE NUMBER
Bendix ADB22X-LT WABCO PAN22 HALDEX DB22LT	ConMet PreSet	Aluminum	No	Steel	10 Stud × 11.25" BC	D-28363-2	10082493
			No	Steel/Aluminum Aluminum		D-28363-1	10082494
Bendix ADB22X-LT	ConMet PreSet	Aluminum Splined	No	Steel	10 Stud × 11.25" BC	D-31179-2	10082497
			No	Steel/Aluminum Aluminum		D-31179-1	10082498
WABCO PAN22 HALDEX DB22LT	Hendrickson	Ductile Iron	Std.	Steel	10 Stud × 11.25" BC	S-34576-1	–
			Std.	Steel/Aluminum Aluminum		S-34576-2	–
			Timken	Steel		S-34576-3	–
			Timken	Steel/Aluminum Aluminum		S-34576-4	–
WABCO PAN17	Hendrickson	Ductile Iron	Std.	Steel	8 stud × 275mm BC	S-37182-1	–
				Steel/Aluminum Aluminum		S-37182-2	–
WABCO PAN19	Hendrickson	Ductile Iron	Std.	Steel	10 Stud × 11.25" BC	S-36701-1	–
				Steel/Aluminum Aluminum		S-36701-2	–
Bendix ADB22X-LT	ConMet	Ductile Iron	Std.	Steel	10 Stud × 11.25" BC	D-28596-31	10020523
			Std.	Steel/Aluminum Aluminum		D-28596-32	10020522
Hendrickson MAXX22T	Hendrickson	Ductile Iron	Std.	Steel	10 Stud × 11.25" BC	S-35025-1	–
			Std.	Steel/Aluminum Aluminum		S-35025-2	–
			Timken	Steel		S-35025-3	–
			Timken	Steel/Aluminum Aluminum		S-35025-4	–
	Walther EMC	Dura-Light Hub® (ADI)	Std.	Steel		S-38162-1	–
			Std.	Steel/Aluminum Aluminum		S-38162-2	–
			Timken	Steel		S-38162-3	–
			Timken	Steel/Aluminum Aluminum		S-38162-4	–

NOTE: Hendrickson part numbers include the hub assembly, rotor assembly and hardware. Cross reference numbers include hub only.

HUBS & ROTOR ASSEMBLIES - HP SPINDLE (Air Disc Brakes Only)

ABS BRAND	HUB BRAND	HUB MATERIAL	BEARING BRAND	WHEEL MATERIAL	SIZE	PART NUMBER	CROSS REFERENCE NUMBER
Bendix ADB22X-LT WABCO PAN22	ConMet PreSet	Aluminum	No	Steel	10 Stud × 11.25" BC	D-32014-2	10082491
			No	Steel/Aluminum Aluminum		D-32014-1	10082492
Bendix ADB22X-LT	ConMet PreSet	Aluminum Splined	No	Steel	10 Stud × 11.25" BC	D-31180-2	10082499
			No	Steel/Aluminum Aluminum		D-31180-1	10082500
		Ductile Iron	Std.	Steel		D-28596-12	10082449
			Std.	Steel/Aluminum Aluminum		D-28596-11	10082450
WABCO PAN22 HALDEX DB22LT	Hendrickson	Ductile Iron	Std.	Steel	10 Stud × 11.25" BC	S-34577-1	–
			Std.	Steel/Aluminum Aluminum		S-34577-2	–
			Timken	Steel		S-34577-3	–
			Timken	Steel/Aluminum Aluminum		S-34577-4	–
WABCO PAN19	Hendrickson	Ductile Iron	Std.	Steel	10 Stud × 11.25" BC	S-36700-1	–
				Steel/Aluminum Aluminum		S-36700-2	–
Bendix ADB22X-LT	ConMet	Ductile Iron	Std.	Steel	10 Stud × 11.25" BC	D-28596-30	10012380
			Std.	Steel/Aluminum Aluminum		D-28596-29	10012381
			Timken	Steel		D-28596-34	10012384
			Timken	Steel/Aluminum Aluminum		D-28596-33	10012385
Hendrickson MAXX22T	Hendrickson	Ductile Iron	Std.	Steel	10 Stud × 11.25" BC	S-35026-1	–
			Std.	Steel/Aluminum Aluminum		S-35026-2	–
			Timken	Steel		S-35026-3	–
			Timken	Steel/Aluminum Aluminum		S-35026-4	–
	Walther EMC	Dura-Light Hub® (ADI)	Std.	Steel		S-36697-1	–
			Std.	Steel/Aluminum Aluminum		S-36697-2	–
			Timken	Steel		S-36697-3	–
			Timken	Steel/Aluminum Aluminum		S-36697-4	–

NOTE: Hendrickson part numbers include the hub assembly, rotor assembly and hardware. Cross reference numbers include hub only.

HUBS ONLY (Air Disc Brakes Only)

ADB BRAND	HUB BRAND	HUB MATERIAL	BEARING BRAND	WHEEL MATERIAL	SIZE	SPINDLE TYPE	PART NUMBER	CROSS REFERENCE NUMBER
Hendrickson MAXX22T™ WABCO PAN19 WABCO PAN22 HALDEX DB22LT	Hendrickson	Ductile Iron	Hyatt	Steel	10 stud x 11.25"	HN	S-33386-1	–
				Steel/Aluminum			S-33386-2	–
				Steel		HP	S-33387-1	–
				Steel/Aluminum			S-33387-2	–
			Timken	Steel		HN	S-33386-5	–
				Steel/Aluminum			S-33386-6	–
			Timken	Steel		HP	S-33387-7	–
				Steel/Aluminum			S-33387-8	–
			Hyatt	Steel	10 stud x 335mm	HN	C-33381-1	–
				Steel/Aluminum			C-33381-2	–
			Timken	Steel			C-33381-5	–
				Steel/Aluminum			C-33381-6	–
			Hyatt	Steel		HP	C-33883-1	–
				Steel/Aluminum			C-33883-2	–
			Timken	Steel			C-33883-5	–
				Steel/Aluminum			C-33883-6	–
Hendrickson MAXX22T	Walther EMC	Dura-Light Hub® (ADI)	Hyatt	Steel	10 stud x 11.25"	HP	S-37184-1	–
				Steel/Aluminum			S-37184-2	
			Timken	Steel			S-37184-3	–
				Steel/Aluminum			S-37814-4	
			Hyatt	Steel		HN	S-38161-1	–
				Steel/Aluminum			S-38161-2	
			Timken	Steel			S-38161-3	–
				Steel/Aluminum			S-38161-4	
Bendix ADB22X-LT	ConMet	Ductile Iron	Hyatt	Steel	10 stud x 11.25"	HP	S-28534-2	10001399
				Steel/Aluminum			S-28534-1	10001400
			Timken	Steel/Aluminum			C-28534-5	10001400
			Hyatt	Steel		HN	C-34582-1	10020523
				Steel/Aluminum			C-34582-2	10020522

ROTOR AND ATTACHMENT HARDWARE KITS - WABCO, BENDIX & HALDEX (Air Disc Brakes Only)

ADB BRAND	DESCRIPTION	CONTAINS	PART NUMBER	CROSS REFERENCE NUMBER	QTY. PER AXLE
WABCO PAN22	Hendrickson cast 430mm rotor	Includes 1 U-shaped rotor, 10 bolts and 10 washers	S-38764	–	2
	Metric fasteners for cast rotor	Includes 20 bolts and 20 washers	S-35210-3	–	1
	Metric fasteners for cast rotor	Includes 10 bolts and 10 washers	S-35210-4	–	2
	ConMet flat rotor	Includes 1 flat rotor, 10 bolts and 10 washers	S-36661-1	10016195	2
	Rotor replacement kits - HN	HN Spindle; Includes 1 rotor, 10 rotor bolts, 10 rotor washers, 6 caliper bolts, 6 caliper washers, 1 seal, 1 gasket, 6 hubcap screws, 6 hubcap washers, 2 button head screws, 1 PRECISION240® lock washer and 1 package of Delo	S-37435-1	–	2
	Rotor replacement kits - HP	HP Spindle; Includes 1 rotor, 10 rotor bolts, 10 rotor washers, 6 caliper bolts, 6 caliper washers, 1 seal, 1 gasket, 6 hubcap screws, 6 hubcap washers, 2 button head screws, 1 PRECISION320® lock washer and 1 package of Delo	S-37435-2	–	2
Bendix ADB22X	Bendix splined 430mm rotor	Includes 1 splined rotor and fasteners	S-29152-17	802569	2
	Bendix cast 430mm rotor	Includes 1 U-shaped rotor	S-32193	K110358	2
	Inch fasteners for U-shaped rotor	Includes 20 bolts and 20 washers for U-shaped rotor	S-35210-1	–	1
	Inch fasteners for U-shaped rotor	Includes 10 bolts and 10 washers for U-shaped rotor	S-35210-2	–	2
	ConMet flat rotor	Includes 1 flat rotor, 10 bolts and 10 washers	S-36661-1	10016195	2
	Bendix splined rotor fastener kit	Includes 1 Bendix fastener kit	S-29152-18	K037767	2
Haldex DB22LT	Hendrickson cast 430mm rotor	Includes 1 U-shaped rotor, 10 bolts and 10 washers	S-34172	–	2
	Metric fasteners for cast rotor	Includes 20 bolts and 20 washers	S-35210-3	–	1
	Metric fasteners for cast rotor	Includes 10 bolts and 10 washers	S-35210-4	–	2
WABCO PAN17	Hendrickson cast 325mm rotor	Includes 1 rotor and fasteners	S-33391	–	2
	Metric fasteners for cast rotor	Includes 16 bolts	S-35210-5	–	1
	Metric fasteners for cast rotor	Includes 8 bolts	S-35210-6	–	2
WABCO PAN19	Hendrickson cast 375mm rotor	Includes 1 rotor and fasteners	S-33389-1	–	2
	Metric fasteners for cast rotor	Includes 20 bolts and 20 washers	S-35210-3	–	1
	Metric fasteners for cast rotor	Includes 10 bolts and 10 washers	S-35210-4	–	2

NOTE: Hendrickson recommends replacing bolts. Cross reference numbers include rotor only.

ROTOR AND ATTACHMENT HARDWARE KITS - MAXX22T™ (Air Disc Brakes Only)

ADB BRAND	HUB	DESCRIPTION	CONTAINS	PART NUMBER	CROSS REFERENCE NUMBER	QTY. PER AXLE
Hendrickson MAXX22T™	Dura-Light Hub®	Hendrickson rotor, short stud	Includes 1 rotor and 10 short wheel studs	S-37009-1	17-00188	2
		Hendrickson rotor, long stud	Includes 1 rotor and 10 long wheel studs	S-37009-2	17-00188	2
		Short wheel stud	1 short wheel stud	S-37024-1	02-00195	20
		Long wheel stud	1 long wheel stud	S-37024-2	02-00175	20
	Ductile Iron	WABCO rotor	Includes 1 rotor*	S-34471	6629056112	2
		Metric fasteners for Hendrickson MAXX22T cast rotor	Includes 20 bolts and 20 washers	S-35210-3	–	1
		Metric fasteners for Hendrickson MAXX22T cast rotor	Includes 10 bolts and 10 washers	S-35210-4	–	2
		Hendrickson MAXX22T rotor replacement kit - HN	HN Spindle; Includes 1 rotor, 10 rotor bolts, 10 rotor washers, 6 caliper bolts, 6 caliper washers, 1 seal, 1 gasket, 6 hubcap screws, 6 hubcap washers, 2 button head screws, 1 PRECISION240® lock washer and 1 package of Delo	S-37434-1	6629056112	2
		Hendrickson MAXX22T rotor replacement kit - HP	HP Spindle; Includes 1 rotor, 10 rotor bolts, 10 rotor washers, 6 caliper bolts, 6 caliper washers, 1 seal, 1 gasket, 6 hubcap screws, 6 hubcap washers, 2 button head screws, 1 PRECISION320® lock washer and 1 package of Delo	S-37434-2	6629056112	2

NOTE: Hendrickson recommends replacing bolts.

*Cross reference numbers include rotor only except 02-00195 and 02-00175.

HUBCAPS

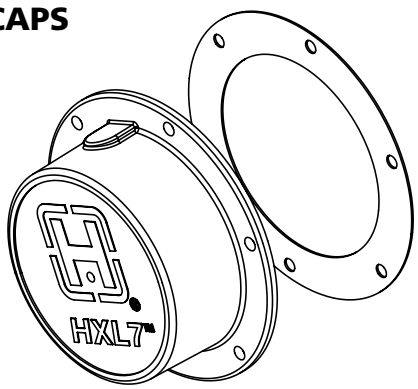

HENDRICKSON ORIGINAL EQUIPMENT REPLACEMENTS

RTR® PACKAGE	TIRES	LUBE TYPE	TIRE INFLATION SYSTEM	SPINDLE	PART NUMBER
HXL7®	Super Single Dual	Semi-fluid Grease	TIREMAAX® CP	HP	VS-32070-3
			TIREMAAX PRO		VS-32056-3
			None		S-34434
HXL5®		Semi-fluid Grease	TIREMAAX CP	HN	VS-32068-3
				HP	VS-32070-3
			TIREMAAX PRO	HN	VS-32055-3
				HP	VS-32056-3
			None	HN	S-33376
				HP	S-33377
HXL3®		Oil	TIREMAAX CP	HN	VS-32068-1
				HP	VS-32070-1
			TIREMAAX PRO	HN	VS-32055-1
				HP	VS-32056-1
			None	HN	S-34784
				HP	S-35943-1
Global Service HLS®*		Grease	None	HN	S-27858
				HP	S-27859
		Oil	None	HP	S-35943-3
Std. Service Global Service HLS ConMet Preset		Semi-fluid Grease	TIREMAAX CP	HN	VS-32068-3
				HP	VS-32070-3
			TIREMAAX PRO	HN	VS-32055-3
				HP	VS-32056-3
Std. Service Global Service** HVS® ConMet Preset		Oil	TIREMAAX CP	HN	VS-32068-1
				HP	VS-32070-1
			TIREMAAX PRO	HN	VS-32055-1
				HP	VS-32056-1

NOTE: Hendrickson part numbers include hubcap and gasket.

*HLS is grease hubcap only.

**Global Service oil hubcaps only available with HP spindle.

DUAL DYNAMICS ORIGINAL EQUIPMENT REPLACEMENT

RTR® PACKAGE	TIRES	LUBE TYPE	TIRE INFLATION SYSTEM	SPINDLE	PART NUMBER	CROSS REFERENCE NUMBER
HXL7®	Super Single Dual	Semi-fluid Grease	TIREMAAX®	HP	VS-31185	–
HVS®		Oil	None	HN	C-28572	207-PSN
				HP	C-28573	257-PSN
Std. Service		Semi-fluid Grease	None	HN	C-29467	202-G
				HP	C-29466	255-G
ConMet Preset		Semi-fluid Grease	None	HN	C-25886	10018622
				HP	S-25888	10018621
		Oil	None	HN	C-25885	106819
				HP	C-25887	106870

NOTE: Hendrickson part numbers and cross reference numbers for Dual Dynamics include hubcap only.

STANDARD BOLT-ON ORIGINAL EQUIPMENT REPLACEMENTS

RTR PACKAGE	TIRES	LUBE TYPE	TIRE INFLATION SYSTEM	SPINDLE	PART NUMBER	CROSS REFERENCE NUMBER
Std. Service	Super Single Dual	Semi-fluid Grease	TIREMAAX	HN	VS-31290	340-4307
				HP	VS-31291	340-4311
		Oil	TIREMAAX	HN	VS-31292	343-4307
				HP	VS-31293	343-4311
			None	HN	A-1974	343-4009
				HP	S-35943-2	343-4195

NOTE: Hendrickson part numbers and cross reference numbers for Stemco bolt-on include hubcap only.

STEMCO SENTINEL ORIGINAL EQUIPMENT REPLACEMENTS

RTR PACKAGE	TIRES	LUBE TYPE	TIRE INFLATION SYSTEM	SPINDLE	PART NUMBER	CROSS REFERENCE NUMBER
Std. Service	Super Single Dual	Semi-fluid Grease	None	HN	S-23987	349-4009
				HP	A-23989	349-4195
		Oil	None	HN	S-23986	348-5307
				HP	A-23988	348-5308

NOTE: Hendrickson part numbers and cross reference numbers for Stemco Sentinel include hubcap only.

RTR PACKAGE	TIRES	LUBE TYPE	TIRE INFLATION SYSTEM	SPINDLE	PART NUMBER	CROSS REFERENCE NUMBER
Global Service HLS	Super Single Dual	Semi-fluid Grease	None	HN	S-27858	HS009P
				HP	S-27859	HS164P

HUBCAP PLUG

HUBCAP BRAND	DESCRIPTION	PART NUMBER	CROSS REFERENCE NUMBER	QTY. PER AXLE
STEMCO Bolt-On	Rubber Hubcap Plug	S-26040	359-5990	2
Dual Dynamics	ConMet Preset Plug	S-30004	DOP10162	2
STEMCO Sentinel	Plastic Hubcap Plug	S-26041	359-6103	2
Hendrickson Std. Bolt-On	Rubber Hubcap Plug	S-39932-1		2

HXL REBUILD KITS

RTR® PACKAGE	SPINDLE	DESCRIPTION	PART NUMBER	QTY. PER AXLE	NOTES
HXL3®	HN®	Hubcap attachment hardware	S-37431-1	2	Includes (1) gasket, (6) screws and washer assemblies
		HXL seal replacement kit	S-37432-3	2	(1) seal, (1) gasket, (2) button head screws, (1) PRECISION240® interlock washer, (6) screws and washer assemblies
		Hub rebuild kit	S-37433-3	2	Includes (1) inner bearing set, (1) outer bearing set, (1) seal, (1) gasket, (2) button head screws, (1) PRECISION240 interlock washer, (6) screws and washer assemblies
	HP	Hubcap attachment hardware	S-37931-2	2	Includes (1) gasket, (6) screws and washer assemblies
		HXL seal replacement kit	S-37432-4	2	Includes (1) seal, (1) gasket, (2) button head screws, (1) PRECISION320 interlock washer, (6) screws and washer assemblies
		Hub rebuild kit	S-37433-4	2	Includes (1) inner bearing set, (1) outer bearing set, (1) seal, (1) gasket, (2) button head screws, (1) PRECISION320 interlock washer, (6) screws and washer assemblies
HXL5®	HN	Hubcap attachment hardware	S-37431-1	2	Includes (1) gasket, (6) screws and washer assemblies
		HXL seal replacement kit	S-37432-1	2	Includes (1) seal, (1) gasket, (2) button head screws, (1) PRECISION240 interlock washer, (1) package of delo grease, (6) screws and washer assemblies
		Hub rebuild kit	S-37433-1	2	Includes (1) inner bearing set, (1) outer bearing set, (1) seal, (1) gasket, (2) button head screws, (1) PRECISION240 interlock washer, (1) package of delo grease, (6) screws and washer assemblies
HXL5 HXL7®	HP	Hubcap attachment hardware	S-37431-2	2	Includes (1) gasket, (6) screws and washer assemblies
		HXL seal replacement	S-37432-2	2	Includes (1) seal, (1) gasket, (2) button head screws, (1) PRECISION320® interlock washer, (1) package of delo grease, (6) screws and washer assemblies
		Hub rebuild kit	S-37433-2	2	Includes (2) bearing sets, (1) seal, (1) gasket, (2) button head screws, (1) PRECISION320 interlock washer, (1) package of delo grease, (6) screws and washer assemblies
HXL3 HXL5 HXL7*	HN	HXL wheel-end adjustment kits	S-39096-1	2	Includes (1) gasket, (6) screw and washer assemblies, (2) button head screws, (1) PRECISION240 interlock washer
	HP		S-39096-2	2	Includes (1) gasket, (6) screw and washer assemblies, (2) button head screws, (1) PRECISION320 interlock washer

*HXL7 is HP only

MAINTENANCE TOOL (Air Disc Brakes Only)

ADB BRAND	DESCRIPTION	PART NUMBER	CROSS REFERENCE NUMBER
All	Includes 1 pad and rotor wear indicator tool	S-37430	–
	Includes 10 pads and rotor wear indicator tools	S-37430-BK	–
	HN end play gauge	S-36710-1	–
	HP end play gauge	S-36710-2	–
	HN & HP end play gauge	S-36710-3	–
	Digital end play gauge indictator	S-36706	–
	Glass inspection mirror	S-38040	–
	Inspection flashlight	S-38180	–
	Pad & rotor inspection kit	S-38181	–
Hendrickson MAXX22T™	Includes 1 adjuster tool	S-32676-5	6401955222
	Includes 1 tool for MAXX22T	S-35303-6	6403225222
	Offset box wrench	S-38378	–
WABCO PAN22	Includes 1 adjuster tool	S-32676-5	6401955222
	Includes 1 tool for PAN22-1	S-32676-6	6401955212
	Offset box wrench	S-38378	–
Haldex DB22LT	Includes 1 special assembly tool kit	S-30560-1	791-1000

HOW TO IDENTIFY AN AIR DISC BRAKE SYSTEM

Please see below to help identify Hendrickson MAXX22T™, WABCO PAN22, Bendix ADB22X and Haldex DBT 22LT ID tags and key identifiers.

Hendrickson MAXX22T™

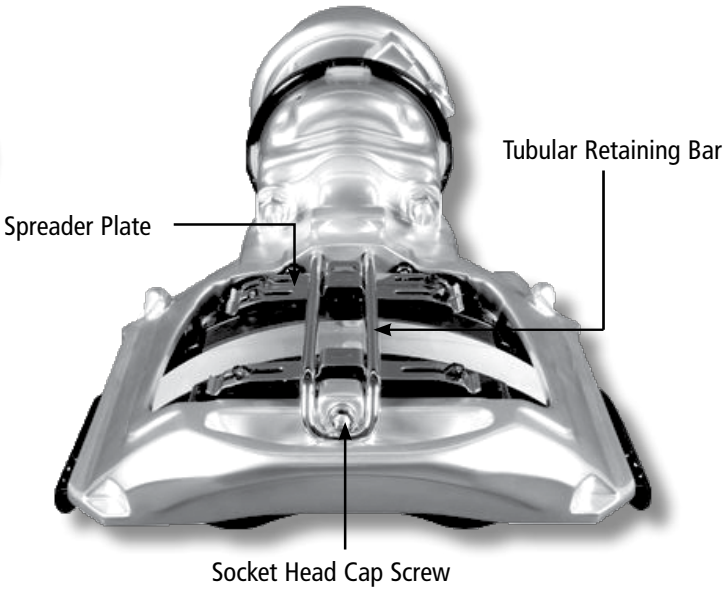

WABCO PAN22

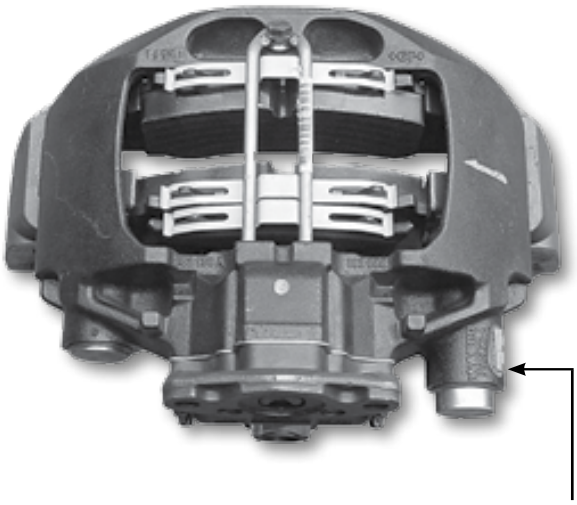

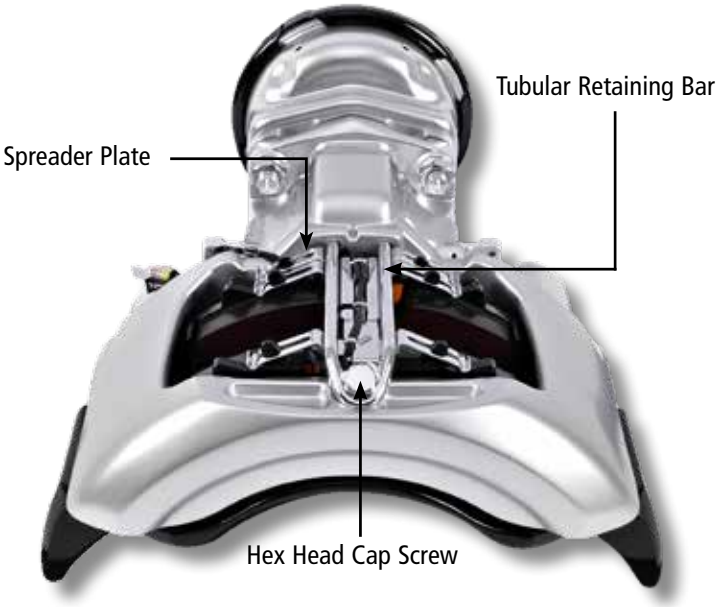

HOW TO IDENTIFY AN AIR DISC BRAKE SYSTEM *– continued*

Bendix ADB22X

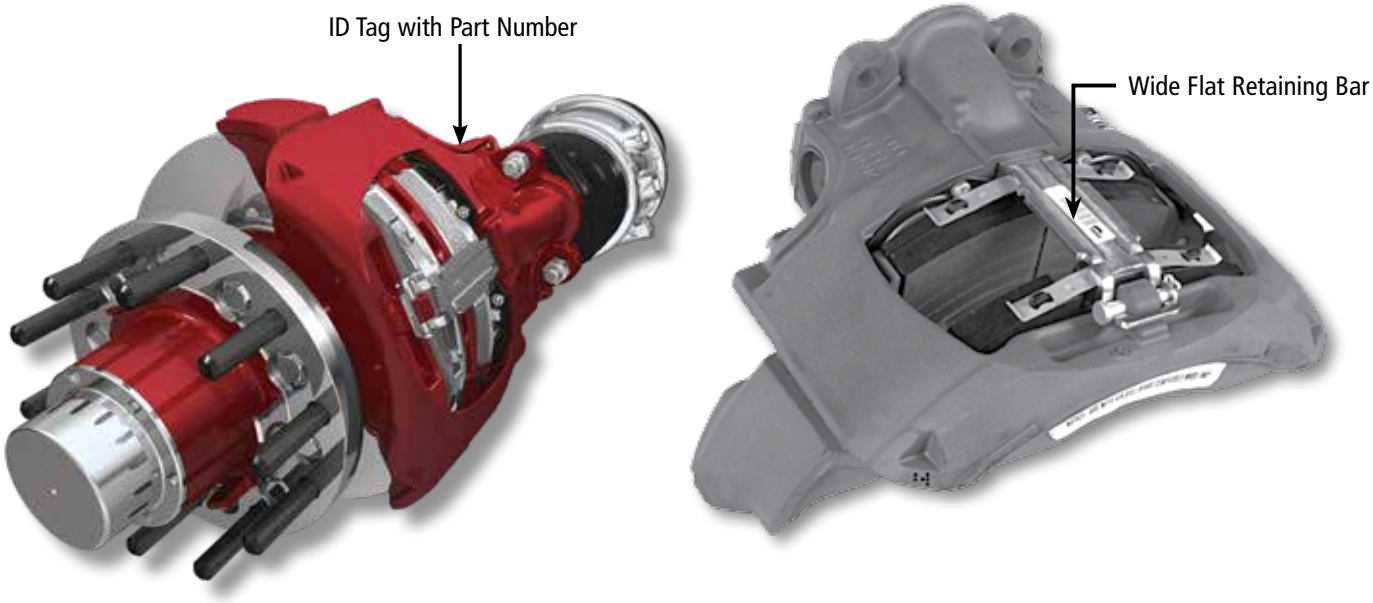

Haldex DBT22LT

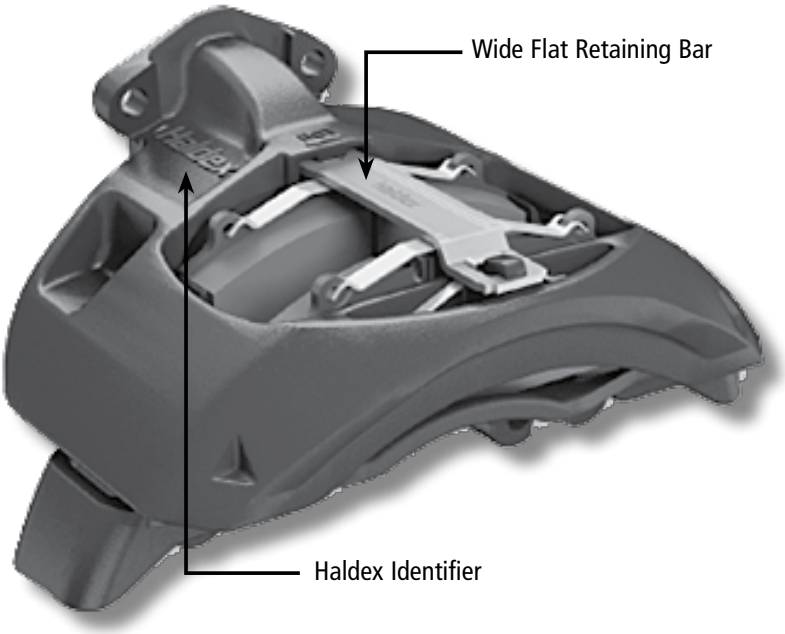

Hendrickson MAXX22T™ Parts Detail

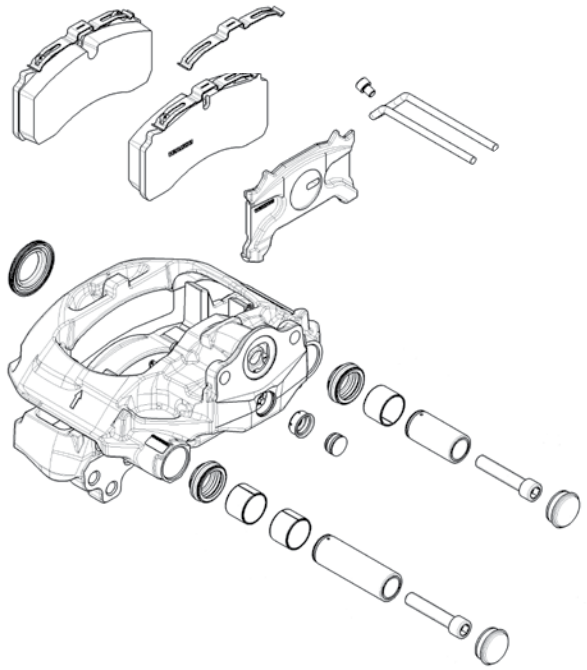

WABCO PAN22 Parts Detail

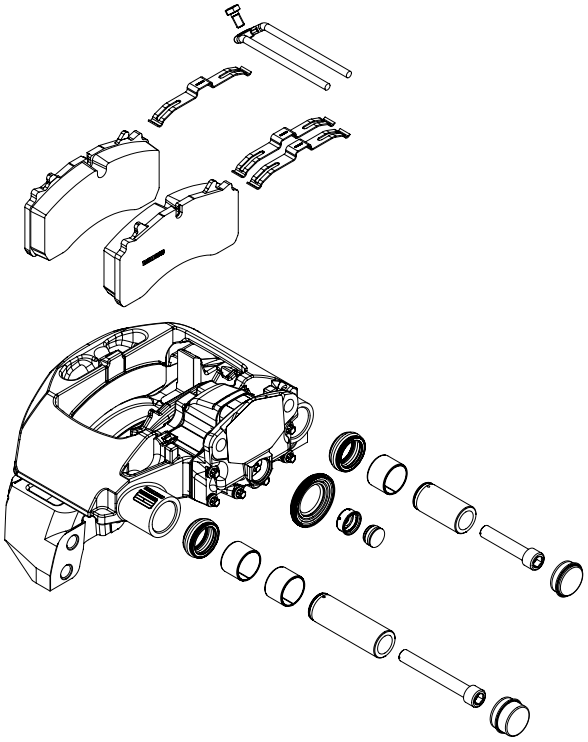

Bendix ADB22X Parts Detail

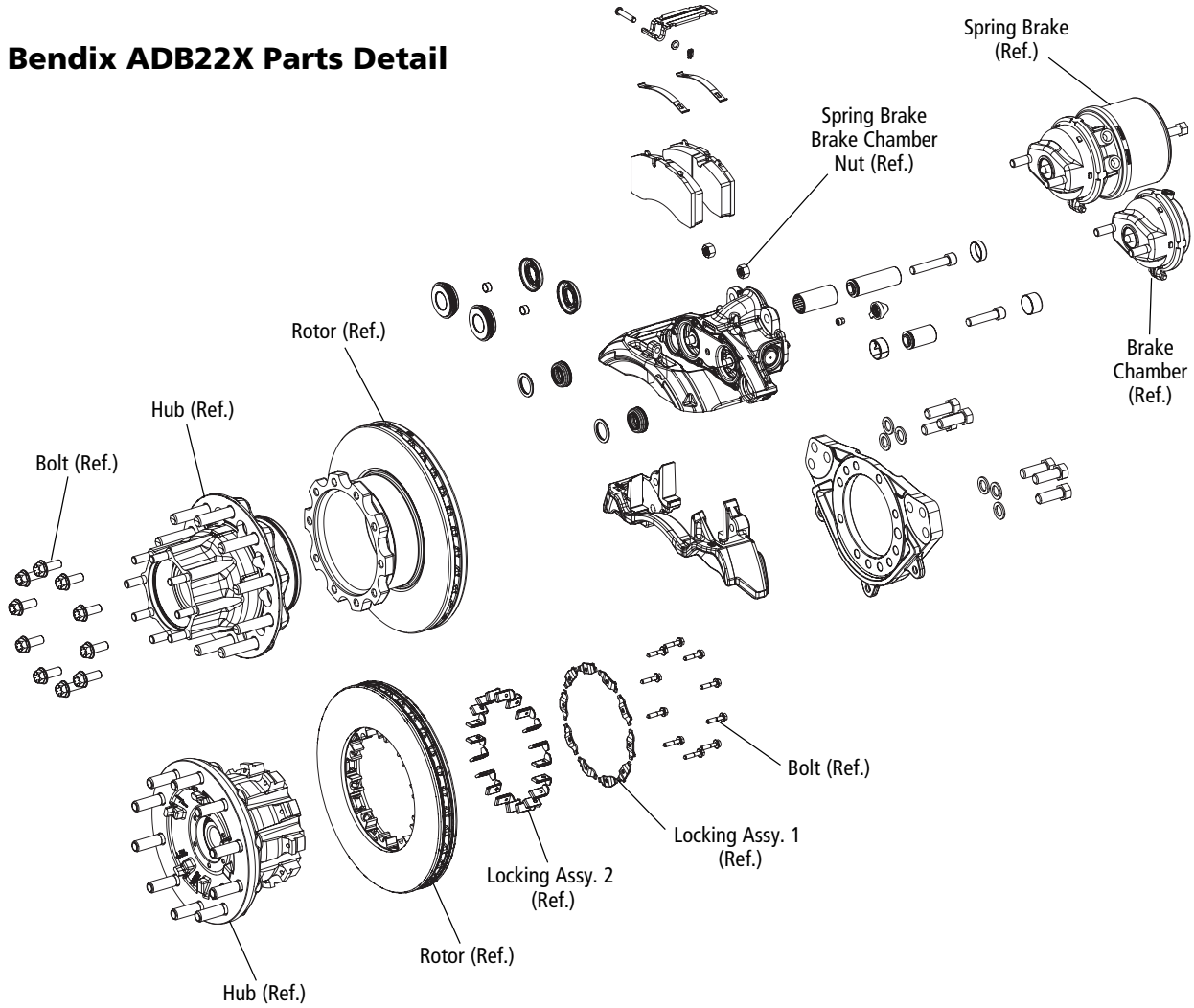

NOTES

VAN APPLICATIONS (VANTRAAX®, ULTRAA-K® and HK™ SERIES) — SEE PAGE 3 FOR PLATFORM APPLICATIONS (INTRAAX® SP)

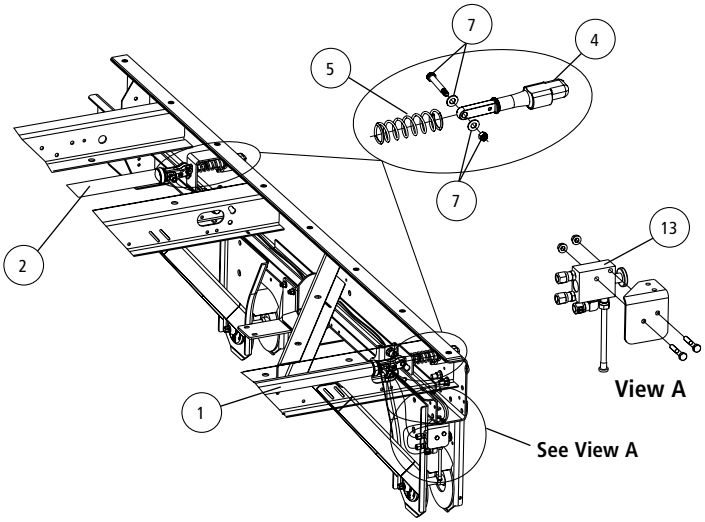

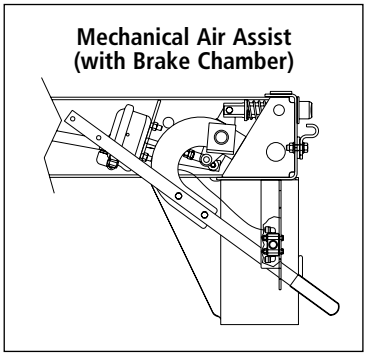

Lever arm actuated version is no longer available on production models. Contact Hendrickson for assistance.

SLIDER PINS

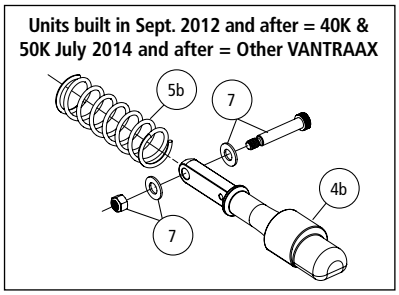

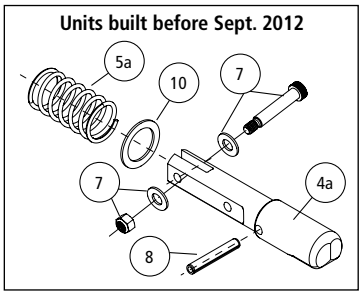

QUIK-DRAW® ACTUATOR ENDS

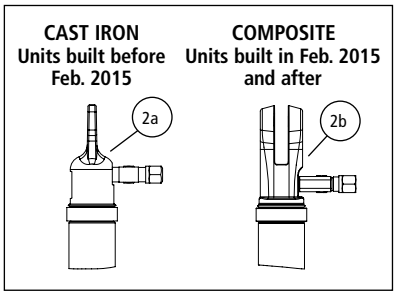

ITEM	DESCRIPTION	PART NO.	QTY.	NOTES
1	**FRONT LINEAR ACTUATOR WITH FITTINGS**			
	Cast Iron **(Units built before Feb. 2015)**			
	42-inch box	S-28061-1	1	Includes one T-fitting
	48- and 54-inch box	S-28061-2	1	Includes one T-fitting
	Composite **(Units built in Feb. 2015 and after)**			
	42-inch box	S-35294-1	1	Includes one T-fitting, clevis pin & hardware
	48- and 54-inch box	S-35294-2	1	Includes one T-fitting, clevis pin & hardware
2	**REAR LINEAR ACTUATOR WITH FITTINGS**			
	2a Cast Iron **(Units built before Feb. 2015)**			
	42-inch box	S-28062-1	1	Includes one straight air line fitting
	48- and 54-inch box	S-28062-2	1	Includes one straight air line fitting
	2b Composite **(Units built in Feb. 2015 and after)**			
	42-inch box	S-35295-1	1	Includes one straight air line fitting, clevis pin & hardware
	48- and 54-inch box	S-35295-2	1	Includes one straight air line fitting, clevis pin & hardware

ITEM	DESCRIPTION	PART NO.	QTY.	NOTES
3	**PIN EXTENSION FOR 54-INCH BOX** (Not Shown)	S-32969	4	
4	**LOCKING PIN**			
	4a Units built before Sept. 2012			
	1.375" diameter pin	S-28290	4	4" (TTMA) and 6" body rail hole spacing
	1.625" diameter pin	S-28289	4	4" body rail hole spacing
	4b Units built in Sept. 2012 and after – 40K and 50K / July 2014 – Other VANTRAAX®			
	1.375" diameter pin	S-32389	4	4" (TTMA) and 6" body rail hole spacing
	1.625" diameter pin	S-32388	4	4" body rail hole spacing
5	**LOCKING PIN SPRING**			
	5a Units built before Sept. 2012			
	42-inch box	B-22000	4	3.8" spring
	48- and 54-inch box	B-28930	4	3.25" spring
	5b Units built in Sept. 2012 and after – 40K and 50K / July 2014 – Other VANTRAAX			
	42", 48" and 54" box with QUIK-DRAW®	B-32500	4	4.5" spring
6	**CLEVIS PIN** (Not Shown)			
	6a Clevis pin **(units built before Sept. 2012)**	SA-5200-6	4	3/8" × 1.380"
	6b Clevis pin **(units built in Sept. 2012 and after - 40K and 50K / July 2014 - Other VANTRAAX)**			
	Cast iron end	SA-5200-8	4	3/8" × 1.50"
	Composite end	SA-5200-10	4	3/8" × 1.813"
7	**SLIDER PIN BOLT KIT**	S-39880-1	1	Includes 4 - 1.75" shoulder bolts, 4 - 1" shoulder bolts, 8 washers and 4 nuts
8	**SPRING PIN (units built before Sept. 2012)**	SA-8100-4	4	3/8" × 2.5" roll pin
9	**LOCKING PIN WASHER** (Not Shown)	SA-1500-2	6	3/8" I.D. flat washer
10	**PIN WASHER**	S-30641	1	
11	**LOCKING COTTER PIN** (Not Shown)	A-29557	6	3/32" × 1" cotter pin
12	**LOCKING PIN LINK** (Not Shown)			
	42-inch box	S-32967-1	2	
	48-inch box	S-32967-2	2	
	54-inch box	S-32967-3	2	
13	**QUIK-DRAW VALVE**			
	Three-way auto reset valve	VS-25223	1	Valve with integral knob
	Three-way auto reset valve assembly	VS-25224	1	Valve with integral knob and fittings
14	**QUIK-DRAW RETROFIT KIT** (Not Shown)			Includes all retrofit components and installation instructions
	42-inch box	D-25430-2	1	
	48-inch box	D-25430-8	1	
	54-inch box	D-25430-4	1	

PLATFORM APPLICATIONS (INTRAAX® SP) — SEE PAGE 1 FOR VAN APPLICATIONS

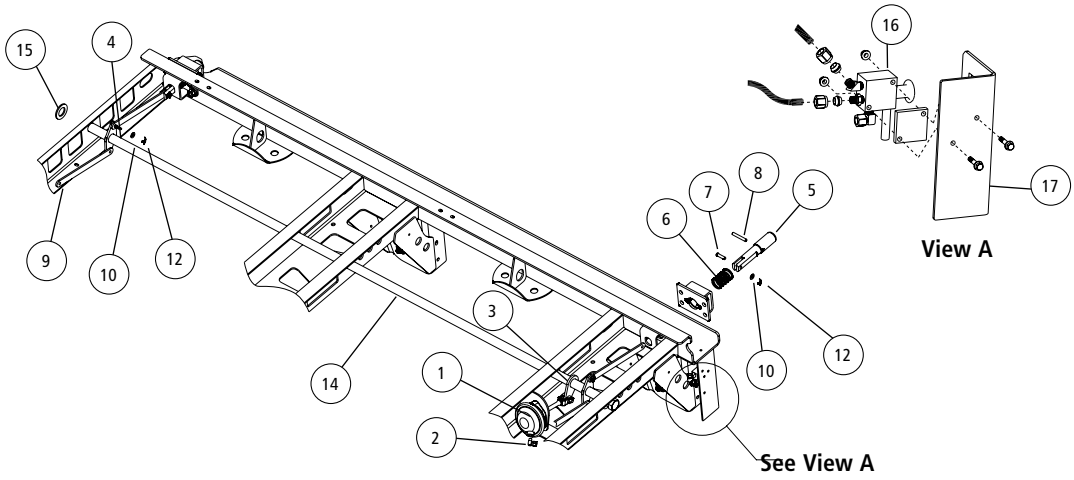

SLIDER PINS

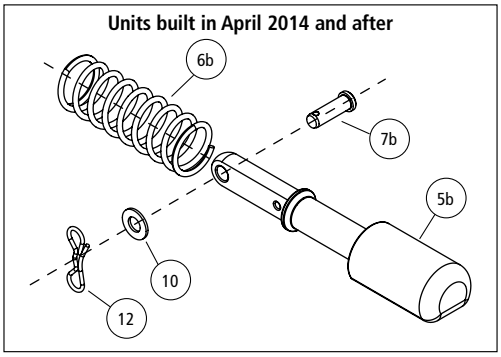

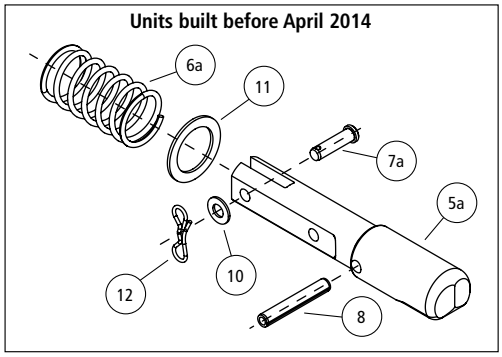

ITEM	DESCRIPTION	PART NO.	QTY.[1]	NOTES
1	**BRAKE CHAMBER ACTUATOR**	A-23039	1	Type 12 modified
2	**90° ELBOW FITTING**	SA-4300-19	1	
3	**BRAKE CHAMBER ACTUATOR CRANK ARM**	S-26964	1	
4	**CRANK ARM WELDMENT**			
	Manual and customer supplied	B-26934	2	For front and rear of slider box
	Mechanical air assist	B-26934	1	For rear of slider box
5	**LOCKING PIN**			
	5a Units built before April 2014			
	1.375" diameter pin	S-28290	4	4" and 6" body rail hole spacing
	1.625" diameter pin	S-28289	4	4" body rail hole spacing
	5b Units built in April 2014 and after			
	1.375" diameter pin	S-32389	4	4" and 6" body rail hole spacing
	1.625" diameter pin	S-32388	4	4" body rail hole spacing
6	**LOCKING PIN SPRING**			
	6a Units built before April 2014			
	42-inch box	B-22000	4	3.25" spring
	48- and 54-inch box	B-28930	4	3.8" spring
	6b Units built in April 2014 and after			
	42", 48" and 54" box with QUIK-DRAW®	B-32500	4	4.5" spring
7	**CLEVIS PIN**			
	7a Units built before April 2014	SA-5200-6	4	$^3/_8$" × 1-$^3/_8$"
	7b Units built in April 2014 and after	SA-5200-3	4	$^3/_8$" × 1-$^1/_5$"
8	**SPRING PIN**	SA-8100-4	4	$^3/_8$" × 2-$^1/_2$" roll pin

1. Quantities may vary depending on model configuration.

ITEM	DESCRIPTION	PART NO.	QTY.[1]	NOTES
9	**LOCKING PIN LINK**	S-26961-1	4	
	37-inch box	S-26961-2	4	
	38-inch box	S-26961-3	4	
	43-inch box	S-26961-4	4	
	44-inch box	SA-1500-2	4	
10	**LOCKING PIN WASHER**	S-30641	6	$^3/_8$" I.D. flat washer
11	**PIN WASHER**	A-29557	1	
12	**LOCKING COTTER PIN**		6	$^3/_{32}$" × 1" cotter pin
13	**OUTER PIN CAGE ASSEMBLY**			Includes roadside and curbside pin cage and (8) bolts
	Without shims	S-28658-3	4	Customer uses inner web reinforcements (includes mounting bolt)
	With shims	S-28658-4	4	Customer uses outer web reinforcements (includes mounting bolt)
14	**PIPE WELDMENT**			Contact Hendrickson for assistance
15	**RING STOP**	A-21347		
16	**QUIK-DRAW® VALVE**			
	Three-way auto reset valve	VS-25223	1	Valve with integral knob
	Three-way auto reset valve assembly	VS-25224	1	Valve with integral knob and fittings
17	**QUIK-DRAW VALVE MOUNTING BRACKET**	C-27025		

1. Quantities may vary depending on model configuration.

INTRAAX® AANT 23K Suspension

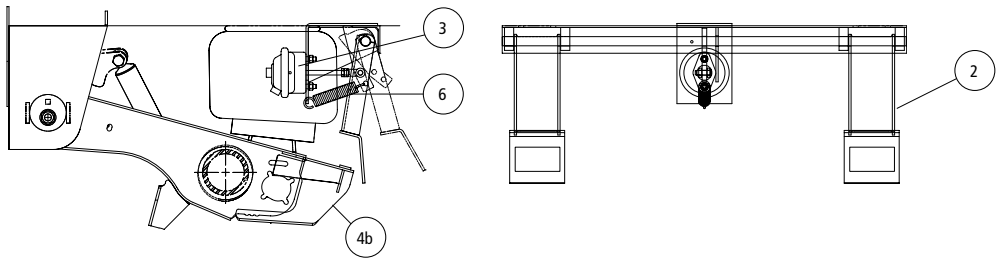

INTRAAX AAT 23K / 25K Suspensions

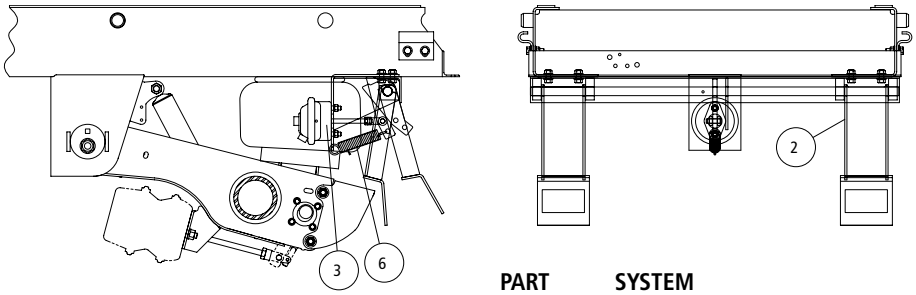

Note: Picture does not depict all models available. Please contact Hendrickson for retrofit kits. SURELOK models with identification tag will read SLK_.XXX.

ITEM	DESCRIPTION	PART NO.	SYSTEM QTY.	NOTE
1	**SURELOK® RETROFIT KIT**[1] (Not shown)	SLK_-XXX	1	Please contact Hendrickson for assistance

SURELOK SERIES	SUSPENSION MODEL
SLKF	AAT Models
SLKV	AAT Models with High Control
SLKT	AANT Models
SLKY	AANT Models with Long Beams

2 RIDE HEIGHT LOCK ASSEMBLY

Axle Track	71.5"	77.5"
AIR SPRING ACTUATED (SLKT with High Control)		
14.0" ride height	–	S-36186-21
BRAKE CHAMBER ACTUATED (SLKF, SLKV AND SLKT)		
13.5" ride height	S-22487-1	S-22487-5
14.0" ride height	S-22487-2	S-22487-6
14.5" ride height	S-22487-3	S-22487-7
15.0" ride height	S-22487-4	S-22487-8
16.0" ride height	S-22487-9	S-22487-13
16.5" ride height	S-22487-17	S-22487-18
17.0" ride height	S-22487-11	S-22487-14
18.0" ride height	S-22487-11	S-22487-15
19.0" ride height	S-22487-12	S-22487-16

3	**BRAKE CHAMBER**	A-21452		Type 9 Chamber
4	**BEAM EXTENSION** (Not shown)			
	4a Bolt-on AAT			SLKF, SLKV models; Includes beam extension and bolt kit
	Roadside	S-33016-1	1	
	Curbside	S-33016-2	1	
	4b Weld-on AANT			SLKT models; Includes beam extension
	Roadside	D-27653-1	1	
	Curbside	D-27653-2	1	
5	**BEAM EXTENSION HARDWARE** (Not shown)			
	BEAM EXTENSION BOLT KIT (Not shown)	S-25980		Includes SA-6900-16 & SA-7000-6
	5/8" - 11" flanged screw	SA-6900-16	8	
	5/8" - 11" prevailing torque flanged nut	SA-7000-6	8	
6	**SPRING**	S-21539	1	1.25" × 6.125" X 0.177"

1. Many SURELOK Retrofit kit options exist based on suspension model, ride height, slider width and valve selection. Contact Hendrickson for assistance.

ULTRAA-K® UTKNT 40K Slider Suspension

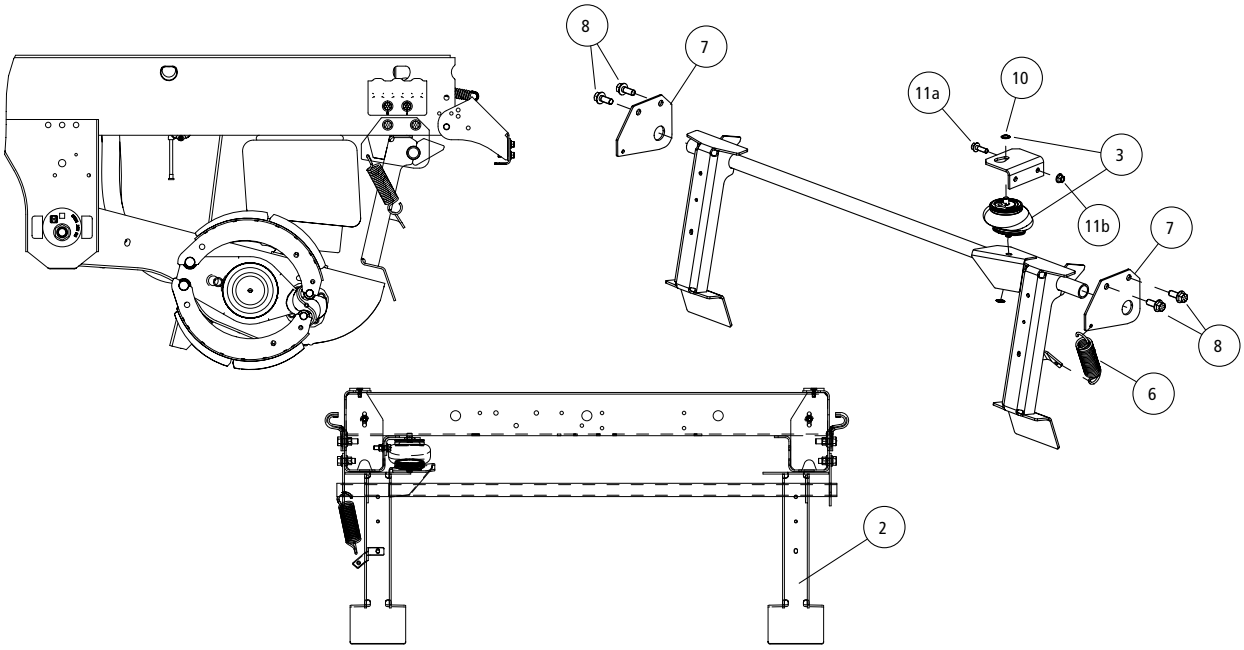

ITEM	DESCRIPTION	PART NO.	SYSTEM QTY.	NOTE
1	**SURELOK® RETROFIT KIT**[1] (Not shown)	SLK_.XXX		Please contact Hendrickson for assistance

SURELOK SERIES	SUSPENSION MODEL
SLKAA	Narrow pivot ULTRAA-K® with short beams
SLKAB	Narrow pivot ULTRAA-K with long beams

ITEM	DESCRIPTION	PART NO.	SYSTEM QTY.	NOTE
2	**RIDE HEIGHT LOCK ASSEMBLY**			

Slider Box Width	48" Box
AIR SPRING ACTUATED (SLKAA)	
16.0" ride height	S-31763-1C / S-31763-2GV

ITEM	DESCRIPTION	PART NO.	SYSTEM QTY.	NOTE
3	**AIR SPRING ACTUATOR ASSEMBLY**	S-25593	1	Includes air spring actuator and 2 speed nuts
4	**BEAM EXTENSION WELDMENTS** (Not shown)			SLKAA models
	Roadside	D-27653-1	1	
	Curbside	D-27653-2	1	
5	**RESTRAINT BOLT KIT**	S-25516	1	Includes 1 bolt, 1 nut and 1 washer
6	**SPRING**	B-26597	1	1.50" × 6.63" × 0.177"
7	**SHAFT BRACKET**	C-31767	2	2 per bracket
8	**MOUNTING HARDWARE FOR BRACKET**	SA-6900-10	4	2 per bracket; 1/2"-13" flanged screw
9	**SPEED NUT** (Not shown)	A-24482-1	2	Included in S-25593
10	**ACTUATOR BRACKET**	C-31765	1	
11	**ACTUATOR BRACKET HARDWARE**[2]			
	11a 3/8" - 16" Flanged screws	SA-6900-5	1	
	11b 3/8" - 16" Flanged nut	SA-7000-3	1	

2. Install rear bolt nut only.

VANTRAAX® HKANT 40K / 46K and HKA180 Slider Suspensions

Illustration 1
Units shipped before **May 1999**

Obsolete

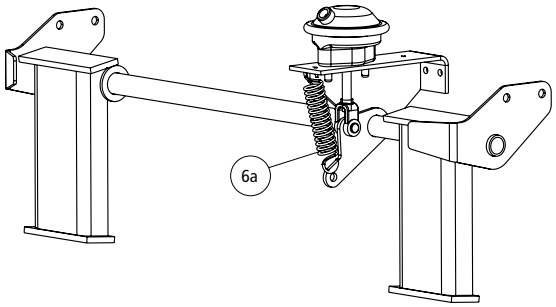

Illustration 2
Units shipped between
May 1999 and December 2001

Obsolete

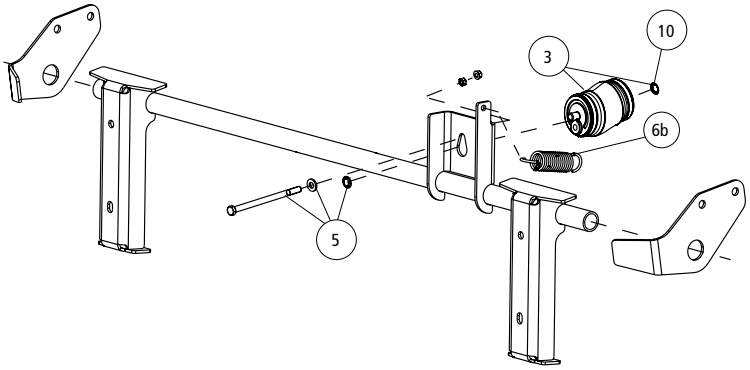

Illustration 3
Units shipped between
December 2001
and December 2015

Obsolete

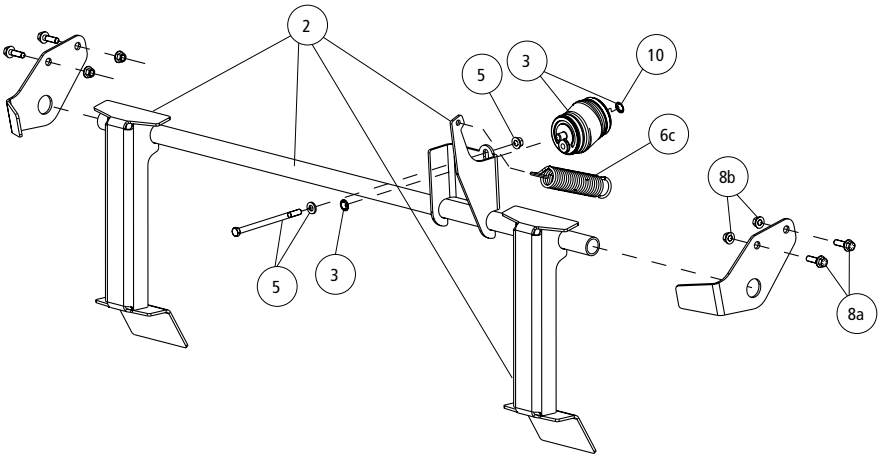

Illustration 4
Units shipped
after **December 2015**

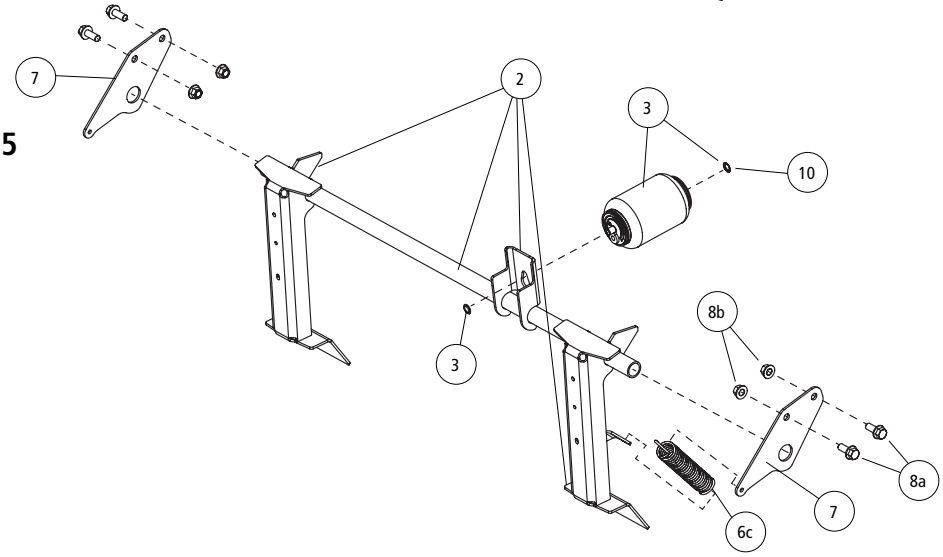

VANTRAAX® HKANT 40K / 46K and HKA180 Slider Suspensions *(Continued)*

ITEM	DESCRIPTION	PART NO.	SYSTEM QTY.	NOTE
1	**SURELOK® RETROFIT KIT**[1] (Not shown)	SLK_.XXX		Please contact Hendrickson for assistance

SURELOK SERIES	SUSPENSION MODEL
SLKS	Narrow pivot VANTRAAX with short beams
SLKP	Narrow pivot VANTRAAX with long beams

2 RIDE HEIGHT LOCK ASSEMBLY

Slider Box Width	42" Box	48" Box		54" Box
		STANDARD	GALVANIZED	
AIR SPRING ACTUATED (SLKS and SLKP)				
15.0" ride height	S-36182-2	S-36186-6	–	S-36186-15
16.0" ride height	S-36186-4	S-36186-8	S-36186-23	S-36186-17
16.5" ride height	S-36186-13	S-36186-14	S-36186-24	S-36186-18
17.0" ride height	S-36186-9	S-36186-11	S-36186-25	S-36186-19
18.0" ride height	S-36186-9	S-36186-11	–	S-36186-19
19.0" ride height	S-36186-10	S-36186-12	–	S-36186-20

3	**AIR SPRING ACTUATOR ASSEMBLY**	S-25593	1	Includes air spring actuator and 2 speed nuts
4	**BEAM EXTENSION WELDMENTS** (Not shown)			SLKS models
	Roadside	D-27653-1	1	
	Curbside	D-27653-2	1	
5	**RESTRAINT BOLT KIT**	S-25516	1	Includes 1 bolt, 1 nut and 1 washer
6	**SPRING**			
	6a Units shipped before May 1999	S-21539	1	1.25" × 6.125" × 0.177"; Illustration 1
	6b Units shipped between May 1999 and December 2001	S-24495	1	1.27" × 4.40" × 0.148"; Illustration 2
	6c Units shipped after December 2001	B-26597	1	1.50" × 6.63" × 0.177"; Illustration 3 and 4
7	**SHAFT BRACKET**	S-36137	1	Illustrations 2, 3 and 4 only
8	**MOUNTING HARDWARE FOR SHAFT BRACKET**			
	8a 1/2" - 13" flanged screw	SA-6900-10	4	2 per bracket
	8b 1/2" - 13" prev-torq. flanged nut	SA-7000-1	4	2 per bracket
9	**MOUNTING HARDWARE FOR BRAKE CHAMBER** (Not shown)			
	9a 3/8" - 16" Flanged nut	SA-7000-3	1	
	9b 3/8" - 16" Flanged screw	SA-6900-5	1	
10	**SPEED NUT**	A-24482-1	2	Included in S-25593

VANTRAAX® HKAT 46K Slider Suspension

Illustration 1
Units shipped before
April 1998

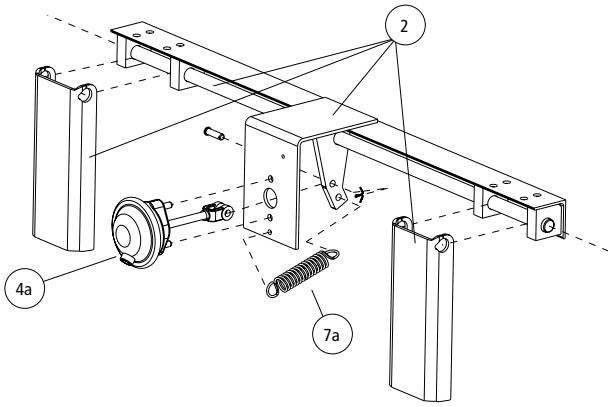

Illustration 2
Units shipped between
April 1998 and May 1999

Obsolete

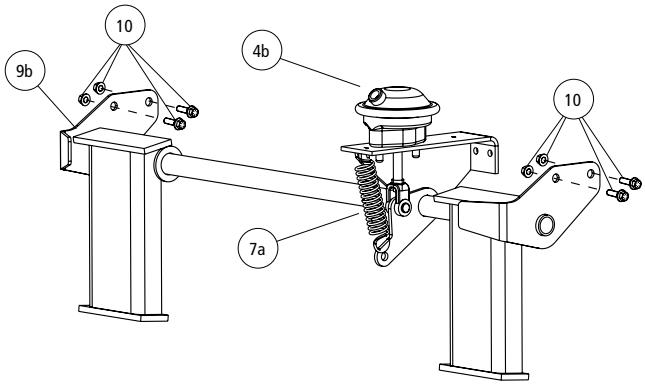

Illustration 3
Units shipped between
May 1999 and December 2001

Obsolete

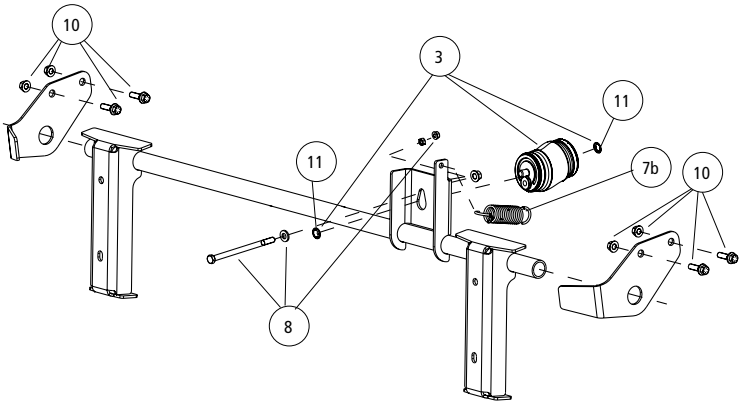

Illustration 4
Units shipped between
December 2001 and December 2015

Obsolete

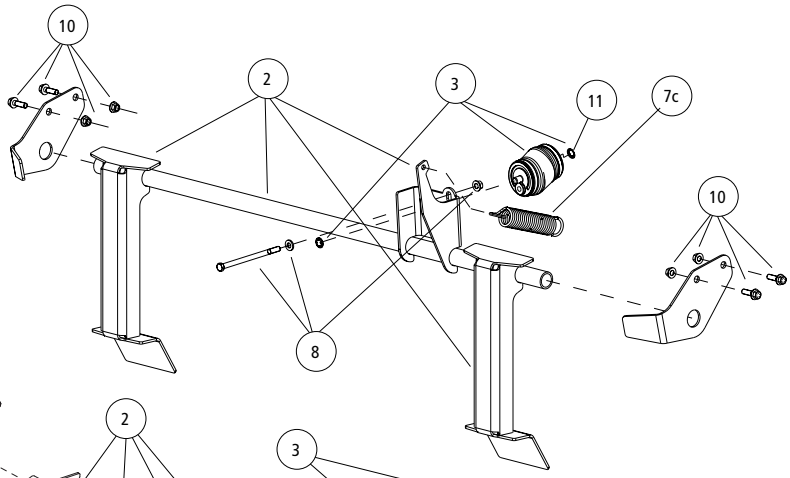

Illustration 5
Units shipped after
December 2015

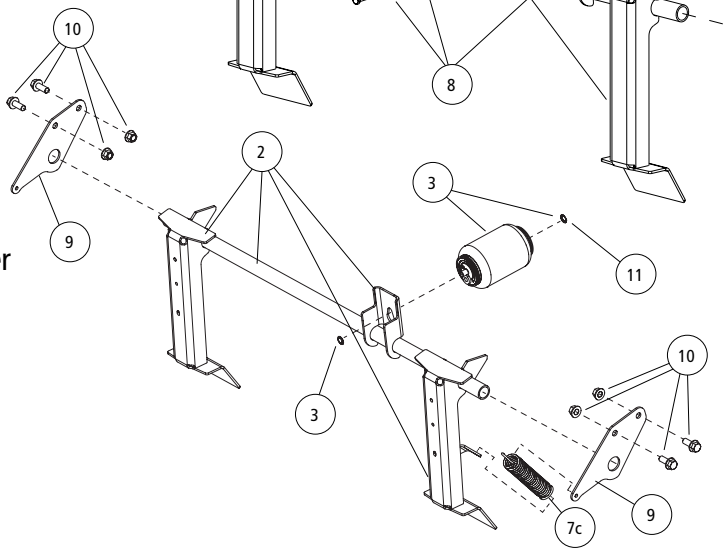

VANTRAAX® HKAT 46K Slider Suspension *(Continued)*

ITEM	DESCRIPTION	PART NO.	SYSTEM QTY.	NOTE
1	**SURELOK® RETROFIT KIT**[1] (Not shown)	SLK_-XXX	1	Please contact Hendrickson for assistance

SURELOK SERIES	SUSPENSION MODEL	DATE PURCHASED
SLKF	Brake chamber actuated version	Wide HKA 200K models sold before May 1999
SLKO	Air spring actuated version	Current models
		Wide pivot VANTRAAX HKAT
		Wide HKA 200K models sold after July 1999

2 RIDE HEIGHT LOCK ASSEMBLY

Slider Box Width	42" Box	48" Box		54" Box
		STANDARD	GALVANIZED	
AIR SPRING ACTUATED (SLKO)				
14.0" ride height	S-36186-2	S-36186-6	–	S-36186-15
15.0" ride height	S-36186-4	S-36186-8	S-36186-22	S-36186-16
15.5" ride height	S-36186-3	S-36186-7	–	S-36186-16
16.0" ride height	S-36186-4	S-36186-8	S-36186-23	S-36186-17
16.5" ride height	S-36186-13	S-36186-14	S-36186-24	S-36186-18
17.0" ride height	S-36186-9	S-36186-11	S-36186-25	S-36186-19
18.0" ride height	S-36186-9	S-36186-11	–	S-36186-19
19.0" ride height	S-36186-10	S-36186-12	–	S-36186-20
BRAKE CHAMBER ACTUATED (SLKF)				
13.5" ride height	S-22487-1	S-22487-5	–	–
14.0" ride height	S-22487-2	S-22487-6	–	–
14.5" ride height	S-22487-3	S-22487-7	–	–
15.0" ride height	S-22487-4	S-22487-8	–	–
16.0" ride height	S-22487-9	S-22487-13	–	–
16.5" ride height	S-22487-17	S-22487-18	–	–
17.0" ride height	S-22487-10	S-22487-14	–	–
18.0" ride height	S-22487-11	S-22487-15	–	–
19.0" ride height	S-22487-12	S-22487-16	–	–

3	**AIR SPRING ACTUATOR ASSEMBLY**	S-25593	1	SLKO model; Includes air spring, actuator and 2 speed nuts
4	**BRAKE CHAMBERS**			
	4a Type 9 (SLKF)	A-21452	1	
	4b Type 12 (SLKF)	S-23169		
5	**BEAM EXTENSIONS** (Not shown)			SLKO, SLKF models; Includes beam extension and bolt kits
	5a Roadside	S-33016-1	1	
	5b Curbside	S-33016-2	1	
6	**BEAM EXTENSION BOLT KIT** (Not shown)	S-25980		Includes SA-6900-16 and SA-7000-6
7	**TENSION SPRINGS**			
	7a 1.25"× 6.13" × 0.177"	S-21539	1	SLFK model, illustration 1 and 2
	7b 1.27"× 4.40" × 0.148"	S-24495	1	SKLO model, illustration 3
	7c 1.5" × 6.63" × 0.177"	B-26597	1	SKLO model, illustration 4 and 5
8	**RESTRAINT BOLT KIT**	S-25516	1	SKLO model, illustration 4 and 5
9	**SHAFT BRACKET**	S-36137	2	SLKO models; Includes 1 bolt, 1 nut and 1 washer
10	**MOUNTING HARDWARE FOR SHAFT BRACKETS**			
	1/2" - 13" flanged screw	SA-6900-10	4	2 per bracket
	1/2" - 13" prevailing torque flanged nut	SA-7000-1	4	2 per bracket
	7/16" hex head bolt	SA-1100-30	1	
	Washer	SA-1500-35	1	
11	**SPEED NUT**	A-24482-1	2	Included in S-25593
12	**BRAKE CHAMBER MOUNTING HARDWARE** (Not shown)			
	12a 3/8-16" flanged screw	SA-6900-5	1	
	12b 3/8-16" prev-torq. flanged nut	SA-7000-3	1	

HK™ SERIES HK190 / 230 Slider Suspensions

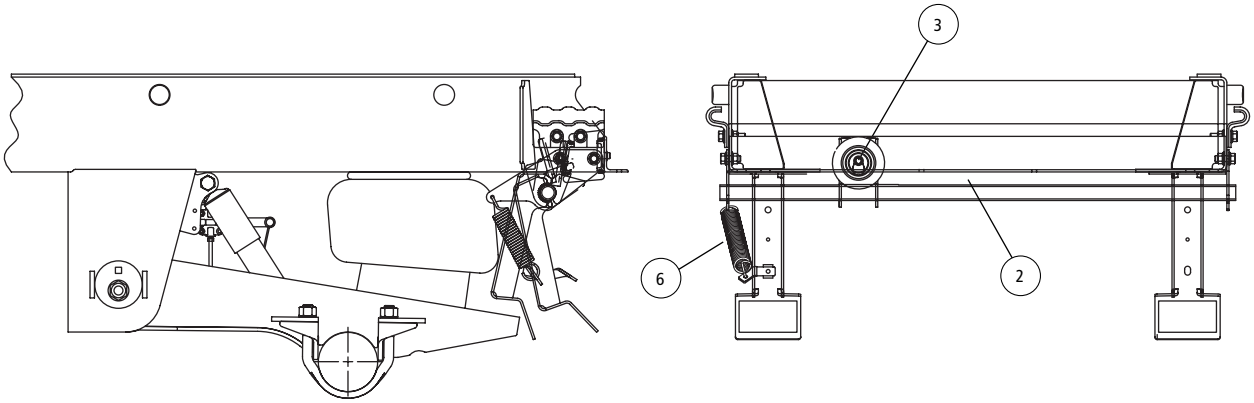

Illustration 4
Units shipped between
December 2001
and December 2015

Obsolete

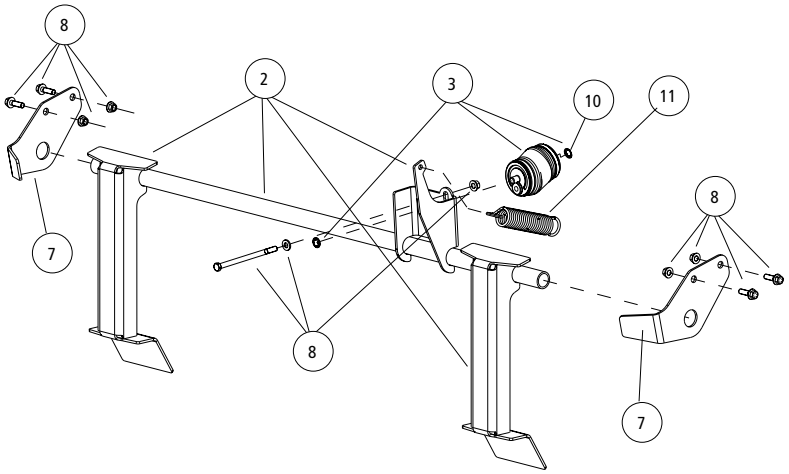

Illustration 5
Units shipped after
December 2015

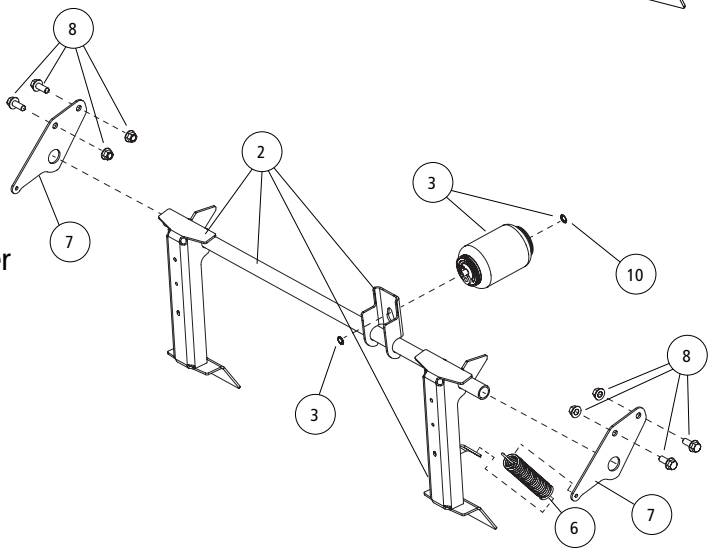

HK™ SERIES HK190 / 230 Slider Suspensions *(Continued)*

ITEM	DESCRIPTION	PART NO.	SYSTEM QTY.	NOTE
1	**SURELOK® RETROFIT KIT**[1] (Not shown)	SLK_-XXX	1	Please contact Hendrickson for assistance

SURELOK SERIES	SUSPENSION MODEL	DATE PURCHASED
SLKN	Long Beams	Sliders made after December 1997
SLKC		Sliders made before December 1997
SLKR	Short Beams	Sliders made after December 1997
SLKM		Sliders made before December 1997

2 RIDE HEIGHT LOCK ASSEMBLY

Slider Box Width	42" Box	48" Box
AIR SPRING ACTUATED (SLKR and SLKN)		
16.0" ride height	S-36187-1	S-36187-6
16.5" ride height	S-36187-2	S-36187-7
17.0" ride height	S-36187-3	S-36187-8
18.0" ride height	S-36187-4	S-36187-9
19.0" ride height	S-36187-5	S-36187-10
BRAKE CHAMBER ACTUATED (SLKC and SLKM)		
16.0" ride height	S-21766-1	S-21766-5
17.0" ride height	S-21766-2	S-21766-6
18.0" ride height	S-21766-3	S-21766-7
19.0" ride height	S-21766-4	S-21766-8

3	**AIR SPRING ACTUATOR ASSEMBLY**	S-25593	1	SLKN and SLKR models; Includes air spring actuator and 2 speed nuts
4	**BRAKE CHAMBER** (Not shown)	A-21452	1	SLKC and SLKM models; Type 9 chamber
5	**BEAM EXTENSION WELDMENT** (Not shown)			
	SLKR models	C-21442	2	
	SLKM models	C-26363	2	
6	**SPRING**			
	1.25" × 6.125" × .177" (Not shown)	S-21539	1	SLKC and SLKM models
	1.50" × 6.63" × .177"	B-26597	1	SLKR and SLKN models
7	**SHAFT BRACKET**	S-36137	2	
8	**MOUNTING HARDWARE FOR SHAFT BRACKET**			2 per bracket
	1/2" - 13" flanged screw	SA-6900-10	4	
	1/2" - 13" prev-torq HEX FLG Nut	SA-7000-1	4	
9	**MOUNTING HARDWARE FOR BRAKE CHAMBER** (Not shown)			
	3/8" - 16" flanged screw	SA-6900-5	4	SLKC and SLKM models
	3/8" - 16" prev-torq HEX FLG Nut	SA-7000-3	4	
10	**SPEED NUT**	A-24482-1	2	SLKN and SLKR models

HT® SERIES HT190 / 230 Top-mount Suspensions

ITEM	DESCRIPTION	PART NO.	SYSTEM QTY.	NOTE
1	**SURELOK® RETROFIT KIT**[1] (Not shown)	SLKU_-XXX	1	Please contact Hendrickson for assistance

SURELOK SERIES	SUSPENSION MODEL	
SLKL	Long Beams	High Control
SLKQ	Short Beams	
SLKK	Long Beams	Standard
SLKA	Short Beams	

2 RIDE HEIGHT LOCK ASSEMBLY

Slider Box Width	42" Box	48" Box
BRAKE CHAMBER ACTUATED (SLKL and SLKQ)		
14.0" ride height	S-23630-1	S-23630-2
15.0" ride height	S-23630-3	S-23630-4
16.0" ride height	S-23630-5	S-23630-6
17.0" ride height	S-23630-7	S-23630-8
BRAKE CHAMBER ACTUATED (SLKA and SLKK)		
14.0" ride height	S-21443-1	S-21443-5
15.0" ride height	S-21443-2	S-21443-6
16.0" ride height	S-21766-1	S-21766-5
17.0" ride height	S-21443-4	S-21443-8

3	**BRAKE CHAMBER**	A-21452	1	Type 9 chamber
4	**BEAM EXTENSION WELDMENT** (Not shown)	C-26363	2	SLKA and SLKQ models
5	**BEAM EXTENSION SCREW** (Not shown)	SA-6900-8	2	
6	**SPRING**	S-21539	1	1.25" × 6.125" × 0.177"

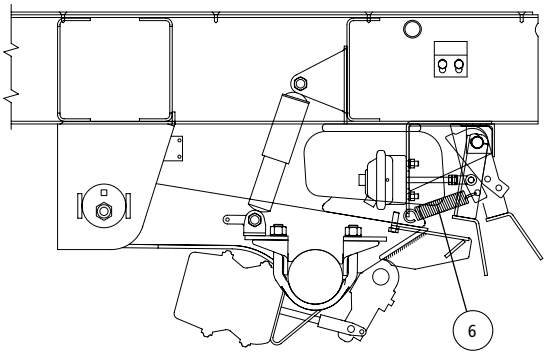

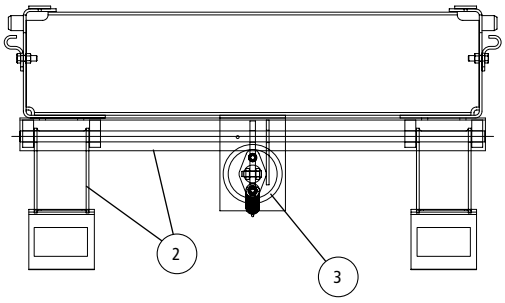

HT® SERIES HT250US Underslung Suspensions

ITEM	DESCRIPTION	PART NO.	SYSTEM QTY.	NOTE
1	**SURELOK® RETROFIT KIT**[1] (Not shown)	SLKU_-XXX	1	Please contact Hendrickson for assistance

SURELOK SERIES	SUSPENSION MODEL
SLKU	HT SERIES Underslung HT250US

ITEM	DESCRIPTION	PART NO.	SYSTEM QTY.	NOTE
2	**RIDE HEIGHT LOCK ASSEMBLY**			

Slider Box Width	42" Box	48" Box
BRAKE CHAMBER ACTUATED (SLKU)		
12.0" ride height	D-27888-1	D-27888-3
14.0" ride height	D-27888-2	D-27888-4

ITEM	DESCRIPTION	PART NO.	SYSTEM QTY.	NOTE
3	**BRAKE CHAMBER**	S-23169	1	Type 12 chamber
4	**SPRING**	S-21539	1	1.25" × 6.125" × 0.177"
5	**GREASE FITTING** (Not shown)	S-22830	4	

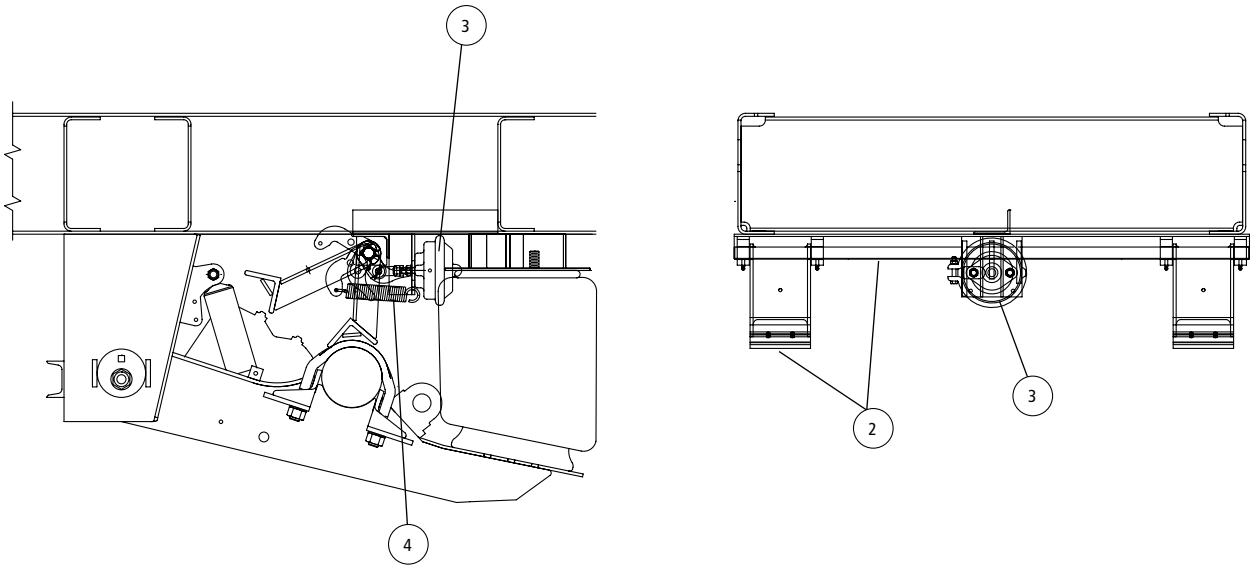

HS SERIES HS190 / 230 Slider Suspensions

ITEM	DESCRIPTION	PART NO.	SYSTEM QTY.	NOTE
1	**SURELOK® RETROFIT KIT**[1] (Not shown)	SLK_-XXX	1	Please contact Hendrickson for assistance

SURELOK SERIES	SUSPENSION MODEL	
SLKB	Long beams	HS models
SLKA	Short beams	

ITEM	DESCRIPTION	PART NO.	SYSTEM QTY.	NOTE
2	**RIDE HEIGHT LOCK ASSEMBLY**			

Slider Box Width	42" Box	48" Box
BRAKE CHAMBER ACTUATED (SLKB AND SLKA)		
14.0" ride height	S-23630-1	S-23630-2
15.0" ride height	S-23630-3	S-23630-4
16.0" ride height	S-23630-5	S-23630-6
17.0" ride height	S-23630-7	S-23630-8

ITEM	DESCRIPTION	PART NO.	SYSTEM QTY.	NOTE
3	**BRAKE CHAMBER**	A-21452	1	Type 9 chamber
4	**SPRING**	S-21539	1	1.25" × 6.125" × 0.177"
5	**MOUNTING HARDWARE** (Not shown)			
	1/2" - 13" flanged screw HTES-1057	SA-6900-8	2	SLKA models
	1/2" - 13" × 100 lg. flanged bolt	SA-6900-6	8	SLKB models
	1/2" - 13" prevailing torque flanged nut	SA-7000-1	8	SLKB models
6	**BEAM EXTENSION**	C-26363	2	SLKA models

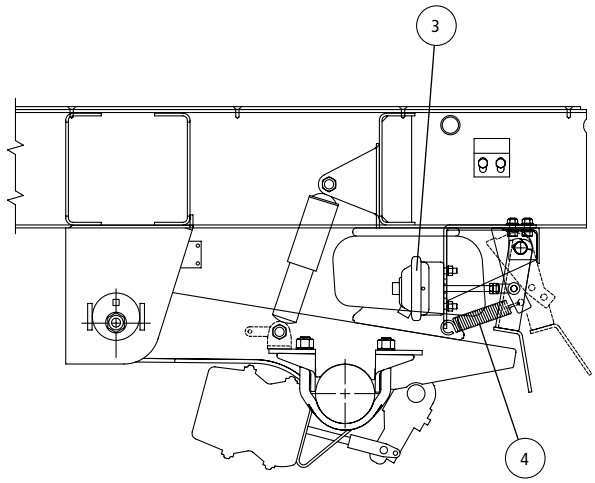

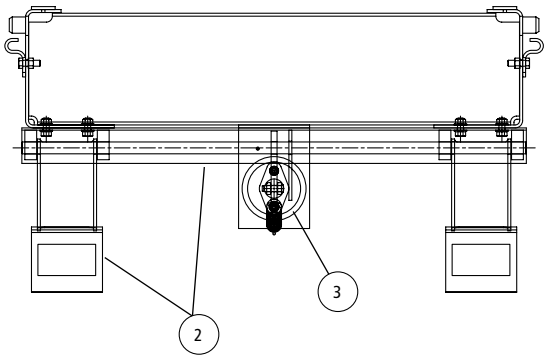

SURELOK® AIR CONTROL KITS

ITEM	DESCRIPTION	PART NO.	SYSTEM QTY.	
	Manual Bypass – allows you to completely bypass SURELOK®, meaning the legs are disengaged and not functioning.			
1	**3-WAY BALL VALVE** (Not shown)	VS-22535	1	
	Manual Bypass with Dump – allows you to completely bypass SURELOK and fully exhaust the trailer's air suspension.			
2	**3-WAY BALL VALVE**	VS-22535	1	
3	**3-WAY AIR PILOTED VALVE** (Not shown)	VS-23588	1	
4	**2-WAY CHECK VALVE** (Not shown)	VS-24988	1	
	Specialized Auto Dump – AKSL0001 – Allows SURELOK to engage, then exhausts the trailer's air suspension to rest the SURELOK legs on the suspension beams.			
5	**3-WAY PILOT VALVE** (Not shown)	VS-24053	1	
6	**CHOKE** (Not shown)	A-27314-1	1	1/8" NPT
	Manual Bypass with Specialized Auto Dump – Allows you to completely bypass SURELOK, OR allows SURELOK to engage, then exhausts the trailer's air suspension to rest the SURELOK legs on the suspension beams.			
7	**3-WAY BALL VALVE** (Not shown)	VS-22535	1	

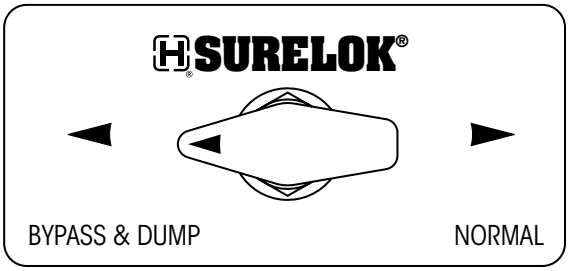

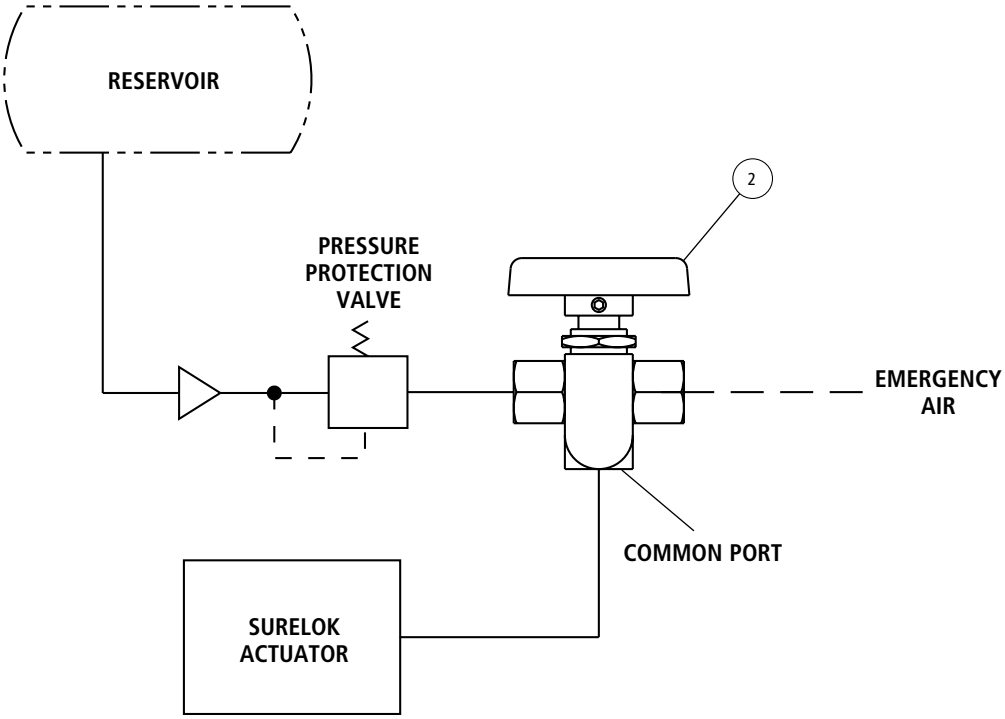

Slider Accessories Parts List

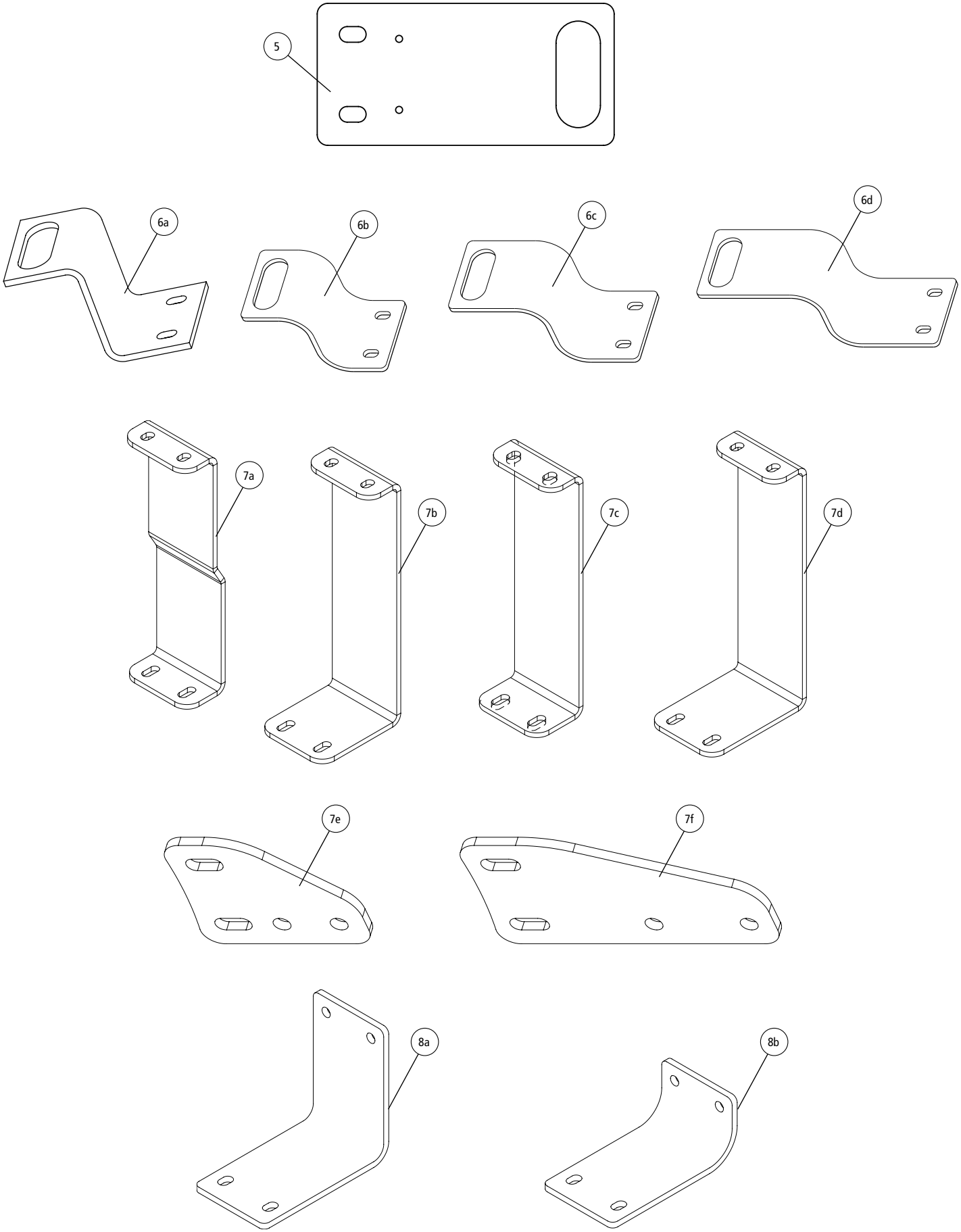

SLIDER ACCESSORIES

ITEM	DESCRIPTION	PART NO.	SYSTEM QTY.	NOTES
1	**MANUAL STOP BAR**			
	42" box with 1.375" diameter pins	S-14231-2	1	For 6" center-to-center hole spacing
	48" box with 1.375" diameter pins	S-14231-8	1	For 6" center-to-center hole spacing
	54" box with 1.375" diameter pins	S-14231-4	1	For 6" center-to-center hole spacing
	42" box with 1.625" diameter pins	S-21477-2	1	For 4" center-to-center hole spacing
	48" box with 1.625" diameter pins	S-21477-8	1	For 4" center-to-center hole spacing
	54" box with 1.625" diameter pins	S-21477-4	1	For 4" center-to-center hole spacing
2	**STINGER**	S-24008-3	1	32" length; Includes stinger, air-line bracket, screws and nuts
3	**MUD FLAP BRACKET**			Includes (1) bracket, bolts and lock-nut
	42" box	S-22428-2	1	
	48" and 54" box	S-22428-8	1	
4	**SLIDER WEAR PADS**			
	HS Slider (per side)	S-14342-1	2	Includes (1) slider wear pad, (8) nuts and (8) screws
	K-2® Sliders (per side)	S-14342-3	2	Includes (1) slider wear pad, (8) nuts and (8) screws
	Tridem 60 (per side)	S-29204-60	2	Includes (3) slider wear pads, (12) nuts and (12) screws
	Tridem 72 (per side)	S-29204-72	2	Includes (3) slider wear pads, (12) nuts and (12) screws
5	**VANTRAAX® Weld-on Flat Air Tank Bracket**			
	48" and 54" box	C-26921	2	Includes (1) bracket
6	**VANTRAAX Weld-on "Z" Air Tank Bracket**			Includes (1) bracket
	6a 42" box	B-27131	2	HKAT 50K and HTHKA models only
	6b 42" box	D-35754-1	2	
	6c 48" box	D-35754-2	2	
	6d 54" box	D-35754-3	2	
7	**INTRAAX® SP AIR TANK BRACKET KIT**			
	7a 37-inch & 38-inch I-Beam Centers	S-27011-1	1	AAZNT Models with large air tank only; Includes 2 brackets, 4 screws and 4 nuts
	7b 43-inch & 44-inch I-Beam Centers	S-27011-2	1	AAZNT Models with large air tank only; Includes 2 brackets, 4 screws and 4 nuts
	7c 37-inch & 38-inch I-Beam Centers	S-27011-3	1	AAZNT Models with small air tank only; Includes 2 brackets, 4 screws and 4 nuts
	7d 43-inch & 44-inch I-Beam Centers	S-27011-4	1	AAZNT Models with small air tank only; Includes 2 brackets, 4 screws and 4 nuts
	7e 37-inch & 38-inch I-Beam Centers	S-27742-1	1	AAZL models with large or small air tank; Includes 2 brackets, 4 screws and 4 nuts
	7f 43-inch & 44-inch I-Beam Centers	S-27742-2	1	AAZL models with large or small air tank; Includes 2 brackets, 4 screws and 4 nuts
8	**ULTRAA-K® AIR TANK BRACKET KIT**			
	8a Standard	S-34883/2	2	Includes (1) bracket, (2) screws and (2) nuts
	8b Optional	S-34884/2	2	Includes (1) bracket, (2) screws and (2) nuts

AXLE COMPONENTS

ITEM	DESCRIPTION	PART NO.	QTY. PER AXLE	NOTES
1	**AXLE NUT KIT**			
	HN® Spindle	S-20492/2	2	Includes inner axle nut, outer axle nut, lock washer and set screw
	HP Spindle	S-20475/2	2	Includes inner axle nut, outer axle nut, lock washer and set screw
	STEMCO PRO-TORQ (HN)	A-23851	2	1-piece spindle nut
	STEMCO PRO-TORQ (HP)	A-23852	2	1-piece spindle nut
	PRECISION320®	S-29286/2	2	Includes button head cap screws, interlock washer, spindle nut
	PRECISION240®	S-33332/2	2	Includes button head cap screws, interlock washer, spindle nut
2	**AXLE FILTER KIT**			
	HN Spindle	S-24963	1	Includes (2) end plugs and (2) filters
	HP and P90 Spindles	S-24960	1	Includes (2) end plugs and (2) filters
3	**ABS WELD-ON BRACKET KIT**			HN, HP and HUS spindles
	5″ Axle	S-27117	2	
	LDA™ (5.75″) Axle	S-28757	2	

NOTES

HENDRICKSON EDUCATIONAL PORTAL

Hendrickson Academy is an interactive online education portal that provides proper maintenance and repair procedures for Hendrickson trailer products. From INTRAAX® suspensions to RTR® wheel-ends to TIREMAAX® tire inflation systems, Hendrickson Academy has technicians covered!

Sign up for free today!

Features:

- Manager Functions
- Certifications
- Quizzes
- Other Technical Literature

www.hendrickson-academy.com

HENDRICKSON

The World Rides On Us®

Hendrickson is a leading global manufacturer and supplier of medium- and heavy-duty mechanical, elastomeric and air suspensions; integrated and non-integrated axle and brake systems; tire pressure control systems; auxiliary lift axle systems; parabolic and multi-leaf springs; stabilizers; bumpers; and components to the global commercial transportation industry.

Outstanding Customer Service

Our customers demand and deserve quality service. The World Rides On Us® symbolizes our commitment to the customer. At Hendrickson that commitment begins early and runs deep.

It starts by providing OEMs advanced engineering services to assist in the design, development and testing of equipment specific to their applications.

We support our products through extensive technical support and training services to help ensure the proper installation, operation, service and maintenance of Hendrickson equipment and aftermarket components.

Hendrickson Trailer Commercial Vehicle Systems
2070 Industrial Place SE
Canton, Ohio 44707-2641
330.456.7288
866.RIDEAIR (743.3247)

www.hendrickson-intl.com

HENDRICKSON

Trailer Commercial Vehicle Systems
2070 Industrial Place SE
Canton, OH 44707-2641 USA

1.866.RIDE AIR 743.3247
330.456.7288

© 2020 Hendrickson USA, L.L.C. All Rights Reserved.
All Actual product performance may vary depending upon vehicle configuration, operation, service and other factors. All applications must comply with applicable Hendrickson specifications and must be approved by the respective vehicle manufacturer with the vehicle in its original, as-built configuration.

Contact Hendrickson for additional details regarding specifications, applications, capacities, and operation, service and maintenance instructions.

L1317 05-20
© 20120 Hendrickson USA, L.L.C. All Rights Reserved

PLUS+
PARTS LOOK UP SYSTEM

Hendrickson PLUS+

"Parts Look Up System" is an online tool to help with your serviceable parts and cross reference needs. On the go? PLUS+ is compatible with mobile devices: smart phones and tablets, just open in browser: www.hendrickson-intl.com/partsandservice